TABLE OF CONTENTS

SHEET NO.	SHEET DESCRIPTION
1	NOTES
2	1x2 BLADE SEALED ASSEMBLY KEYING CONFIGURATIONS
3	1x3 BLADE SEALED ASSEMBLY KEYING CONFIGURATIONS
4	CLIP-SLOT CONFIGURATIONS
5	BLADE SEALED ASSEMBLY
6	CONNECTION SYSTEM PACKAGING
7	WIRE DRESS COVER INTERFACE OPTIONS
8	1x2 BLADE SEALED ASSEMBLY BOM INTERFACE OPTION 1
9	1x2 BLADE SEALED ASSEMBLY BOM INTERFACE OPTION 2
10	1x3 BLADE SEALED ASSEMBLY BOM INTERFACE OPTION 1
11	1x3 BLADE SEALED ASSEMBLY BOM INTERFACE OPTION 2

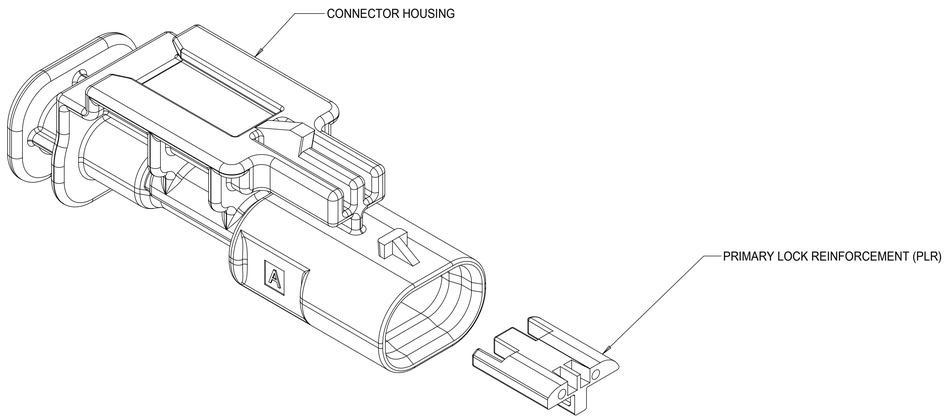

NOTES: VALID UNLESS OTHERWISE SPECIFIED

1. GENERAL:
a. APPLICATION SPECIFICATION SEE: AS-34900-0001
CONTAINS: PRODUCT INTRODUCTION, PRODUCT SUMMARY, CONNECTOR ASSEMBLY, PACKAGING INFORMATION, CONNECTOR MATING, SERVICE INSTRUCTIONS, ELECTRICAL CONTINUITY CHECKING, CRIMPING, AND TROUBLESHOOTING.
b. PRODUCT SPECIFICATION SEE: PS-34900-0001
CONTAINS: PRODUCT INTRODUCTION, PRODUCT SUMMARY, RATINGS (CURRENT, TEMPERATURE, SEALING, AND FLAMMABILITY), AND PRODUCT VALIDATION.
c. PACKAGING SPECIFICATION PER MOLEX DRAWING: PK-31301-898
d. PARTS MUST BE IN COMPLIANCE TO MOLEX CHEMICAL SUBSTANCES FOR PRODUCTS AND PACKAGING SPECIFICATION: ES-40000-5016
e. DATA MUST BE SUBMITTED UNDER THE MOLEX PART NUMBER TO IMDS (COMPANY ID#13255)

2. DESIGN - MATERIALS:
a. SEE BOM TABLE

3. DESIGN - GEOMETRY:
a. THIS IS A 100% CAD GENERATED PART. THE CAD MATHEMATICAL DATA IS THE MASTER FOR THIS PART. FOR DIMENSIONAL OR ANY INFORMATION NOT SHOWN ON THIS DRAWING, ANALYZE THE CAD MODEL.
b. GEOMETRIC DIMENSIONS AND TOLERANCES PER ASME Y14.5M - 1994
c. EDGES AND UNDIMENSIONED DETAILS PER ISO13715
d. CORNERS SHOWN AS SHARP TO BE R 0.2 MAX.
e. LETTERING SHALL BE 0.15 MAX RAISED IN 0.25 MAX RECESS PAD. THIS INCLUDES RECYCLING CODE, CAVITY ID, VENDOR IDENTIFICATION,
f. VISUAL DEFECTS SHALL MEET COSMETIC STANDARD PS-45499-002 (Class B)
g. LASER MARKING:
1. PART NUMBER
2. DAY OF THE YEAR
3. SHIFT
4. YEAR

REV	DESCRIPTION
A15	- NX-REMASTERING FROM MODEL MANAGER - 1x2 KEY C MOVED TO SALEABLE - 1X3 WDC INTERFACE 2 PART NUMBERS UPDATED TO MATCH E-DRAWING
A14	CORRECTED CHARTED DIMENSION 3 FOR 1X3 11MM CLIPSLOT
A13	1x3 KEY A&B SALEABLE (NON 40G)
A12	1X2 KEYS A&B W/ WDC SALEABLE
A11	CORRECTED REVISION LOG
A10	1X2,1X3 WIRE DRESS FEATURES OK TO TOOL
A9	1X2,1X3 PART # STATUS UPDATED
A8	1X2 40G CLIP-SLOT OK TO TOOL
A7	1X2,1X3 PART # UPDATED TO "TOOLED BUT NOT VALIDATED"
A6	ADDED 40G CLIP-SLOT PART NUMBERS
A5	BOM CORRECTIONS AND UPDATES
A4	BOM CORRECTIONS AND UPDATES
A3	1x2, 1x3 NON-SIR PART# OK TO TOOL
A2	ADDED 1x3 11mm CLIP-SLOT PART #
A	ADDED BLACK PART# AND MINOR BOM UPDATES
6	ADDED CLIP SLOT CONFIGURATIONS
5	1X3 BOM UPDATED
4	1X3 INLINE ASSY VIEWS ADDED
3	MINOR BOM CORRECTIONS
2	UPDATED PACKAGING DIMENSIONS
1	INITIAL RELEASE

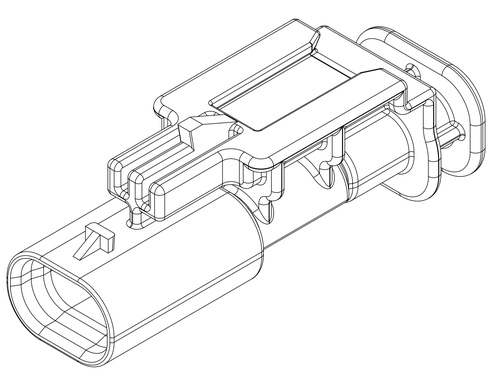

1x2 BLADE SEALED ASSEMBLY

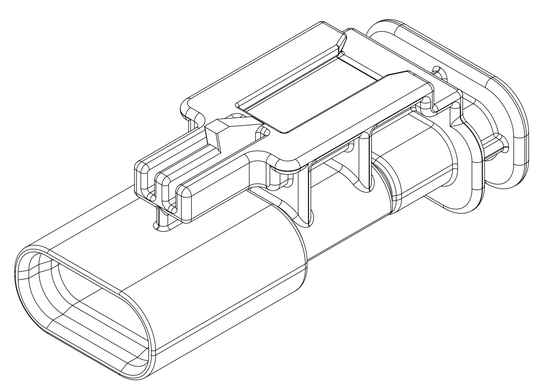

1x3 BLADE SEALED ASSEMBLY

INSPECTION NUMBER LOG
LAST NUMBER USED:
ADDED:
REMOVED:

QUALITY SYMBOLS
E A = 0
E C = 0
E D = 0
▼ = 0
C = 0
☒ = 0
■ = 0
E = 0

THIS DRAWING CONTAINS INFORMATION THAT IS PROPRIETARY TO MOLEX ELECTRONIC TECHNOLOGIES, LLC AND SHOULD NOT BE USED WITHOUT WRITTEN PERMISSION

EC NO: 117908 2017/04/11
DRWN: VYARAPPA 2017/06/22
CHK'D: KDEKOSKI
APPR:
REV A15

GENERAL TOLERANCES (UNLESS SPECIFIED)

ANGULAR TOL ± 3.0 °	
4 PLACES	±
3 PLACES	±
2 PLACES	± 0.1
1 PLACE	± 0.2
0 PLACES	± 0.5

DRAFT WHERE APPLICABLE MUST REMAIN WITHIN DIMENSIONS

DIMENSION UNITS: MM
SCALE: 4:1
DRWN BY: SKRAJENDRANA
DATE: 2013/11/06
CHK'D BY
DATE
APPR BY
DATE
DRAWING SIZE: D
THIRD ANGLE PROJECTION

molex®

1.2MM 1X2, 1X3 BLADE SEALED ASSEMBLY CABLE SEAL

PRODUCT CUSTOMER DRAWING

SERIES	MATERIAL NUMBER	CUSTOMER
34899	SEE BOM	GENERAL MARKET

DOCUMENT NUMBER	DOC TYPE	DOC PART	SHEET NUMBER
SD-34899-2001	PSD	001	1 OF 11

RELEASE STATUS	P1	RELEASE DATE	22.06.2017 19:25:24

FORMAT: molex-landscape
REVISION: C
DATE: 2015/04/08

1x2 BLADE SEALED ASSEMBLY KEYING CONFIGURATIONS. FOR PART NUMBERS REFER TO BOM SHEET.

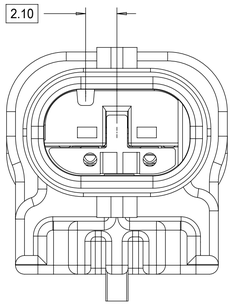

KEYING OPTION A

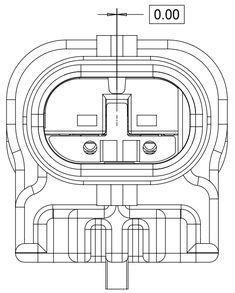

KEYING OPTION B

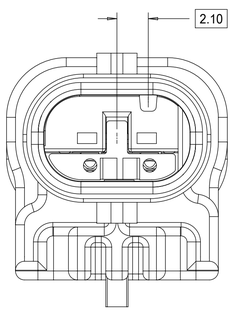

KEYING OPTION C

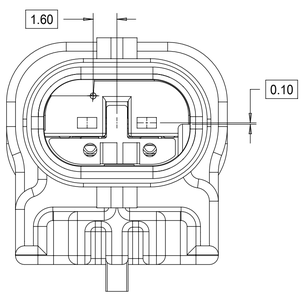

KEYING OPTION E

QUALITY SYMBOLS	
F A	= 0
F C	= 0
F D	= 0
▼	= 0
C	= 0
☒	= 0
■	= 0
G	= 0

THIS DRAWING CONTAINS INFORMATION THAT IS PROPRIETARY TO MOLEX ELECTRONIC TECHNOLOGIES, LLC AND SHOULD NOT BE USED WITHOUT WRITTEN PERMISSION

EC NO: 117908 — 2017/04/11
DRWN: VYARAPPA
CHK'D:
APPR: KDEKOSKI — 2017/06/22

REV: A15

GENERAL TOLERANCES (UNLESS SPECIFIED)

ANGULAR TOL	±	3.0 °
4 PLACES	±	
3 PLACES	±	
2 PLACES	±	0.1
1 PLACE	±	0.2
0 PLACES	±	0.5

DRAFT WHERE APPLICABLE MUST REMAIN WITHIN DIMENSIONS

DIMENSION UNITS: MM
SCALE: 5:1
DRWN BY: SKRAJENDRANA
DATE: 2013/11/06
CHK'D BY
DATE
APPR BY
DATE
DRAWING SIZE: D
THIRD ANGLE PROJECTION

molex®

1.2MM 1X2, 1X3 BLADE
SEALED ASSEMBLY CABLE SEAL

PRODUCT CUSTOMER DRAWING

SERIES	MATERIAL NUMBER	CUSTOMER
34899	SEE BOM	GENERAL MARKET

DOCUMENT NUMBER	DOC TYPE	DOC PART	SHEET NUMBER
SD-34899-2001	PSD	001	2 OF 11

RELEASE STATUS	P1	RELEASE DATE	22.06.2017 19:25:24

TEMPLATE: molex-Size-D.tmpl
DOCUMENT: 34899.dwg
DATE: 2017/06/06

1x3 BLADE SEALED ASSEMBLY KEYING CONFIGURATIONS. FOR PART NUMBERS REFER TO BOM SHEET.

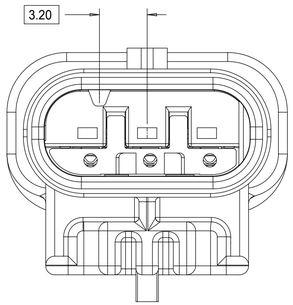

KEYING OPTION A

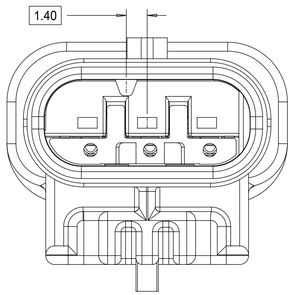

KEYING OPTION B

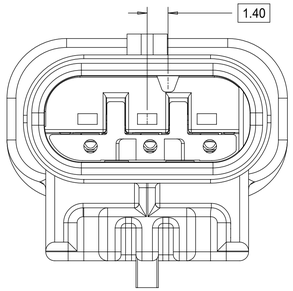

KEYING OPTION C

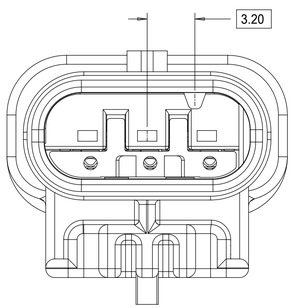

KEYING OPTION D

QUALITY SYMBOLS	
FA	= 0
FC	= 0
FP	= 0
▼	= 0
C	= 0
☒	= 0
■	= 0
S	= 0

THIS DRAWING CONTAINS INFORMATION THAT IS PROPRIETARY TO MOLEX ELECTRONIC TECHNOLOGIES, LLC AND SHOULD NOT BE USED WITHOUT WRITTEN PERMISSION

EC NO: 117908 2017/04/11
DRWN: VYARAPPA
CHK'D: KDEKOSKI 2017/06/22
APPR:

REV: A15

GENERAL TOLERANCES (UNLESS SPECIFIED)

ANGULAR TOL	±	3.0 °
4 PLACES	±	
3 PLACES	±	
2 PLACES	±	0.1
1 PLACE	±	0.2
0 PLACES	±	0.5

DRAFT WHERE APPLICABLE MUST REMAIN WITHIN DIMENSIONS

DIMENSION UNITS	MM
SCALE	5:1
DRWN BY	SKRAJENDRANA
DATE	2013/11/06
CHK'D BY	
DATE	
APPR BY	
DATE	
DRAWING SIZE	D
THIRD ANGLE PROJECTION	

molex®

1.2MM 1X2, 1X3 BLADE
SEALED ASSEMBLY CABLE SEAL

PRODUCT CUSTOMER DRAWING

SERIES	MATERIAL NUMBER	CUSTOMER
34899	SEE BOM	GENERAL MARKET

DOCUMENT NUMBER	DOC TYPE	DOC PART	SHEET NUMBER
SD-34899-2001	PSD	001	3 OF 11

RELEASE STATUS	P1	RELEASE DATE	22.06.2017 19:25:24

Creation date/time (d.m.y h:m:s)
REVISION: 01
DATE: 20110506

CLIP-SLOT CONFIGURATIONS. FOR PART NUMBERS REFER TO BOM SHEET.

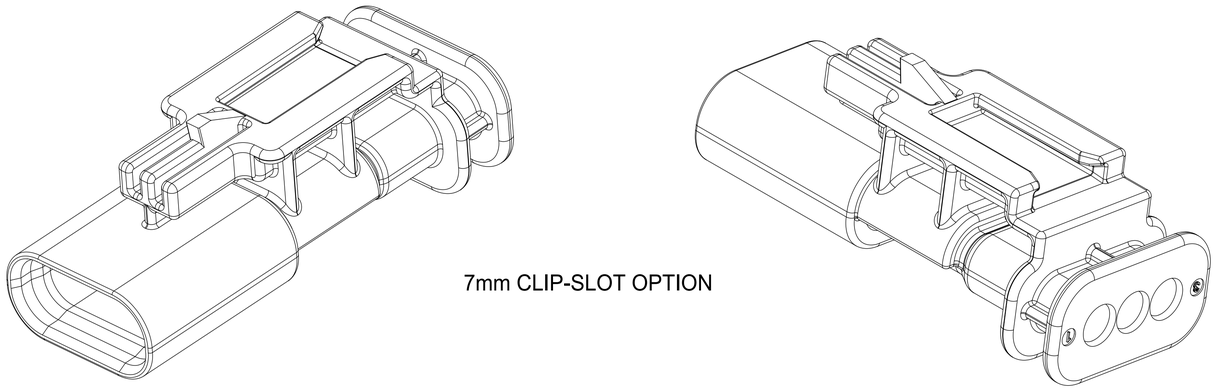

7mm CLIP-SLOT OPTION

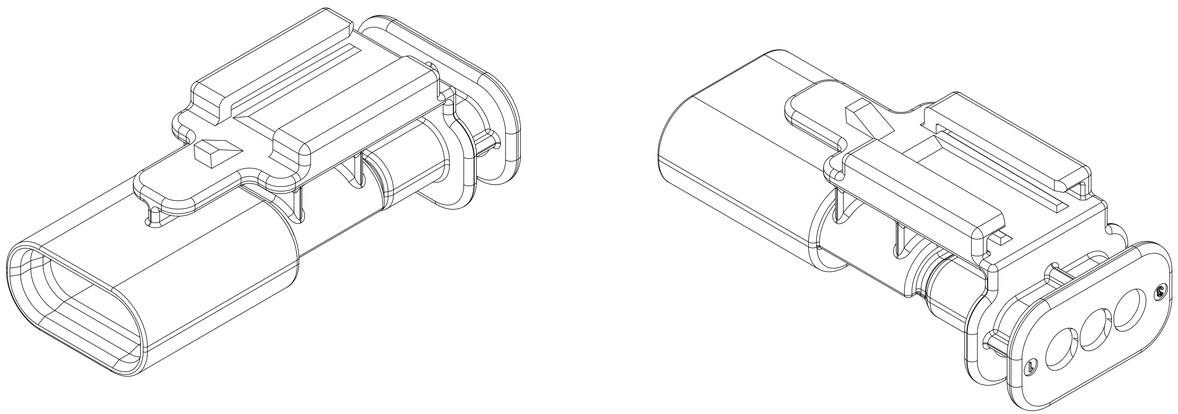

11mm CLIP-SLOT OPTION

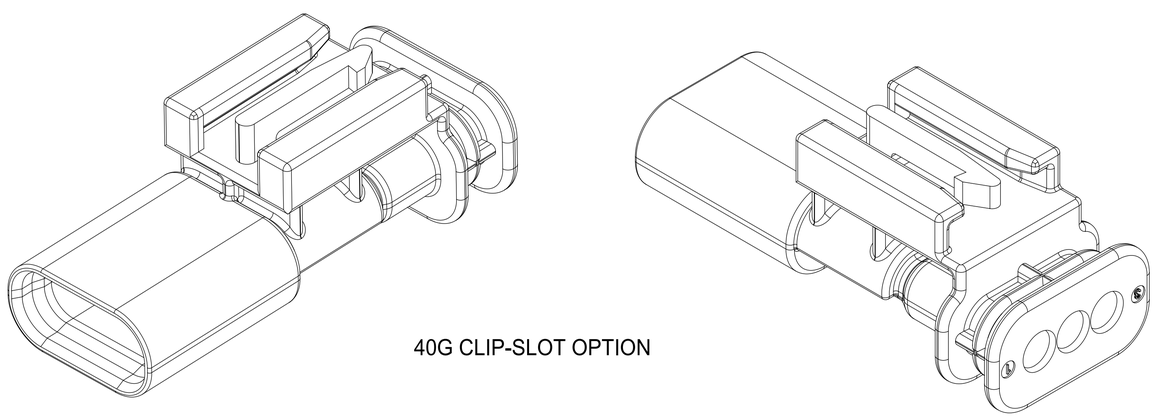

40G CLIP-SLOT OPTION

QUALITY SYMBOLS	THIS DRAWING CONTAINS INFORMATION THAT IS PROPRIETARY TO MOLEX ELECTRONIC TECHNOLOGIES, LLC AND SHOULD NOT BE USED WITHOUT WRITTEN PERMISSION		
= 0	EC NO: 117908 2017/04/11	GENERAL TOLERANCES (UNLESS SPECIFIED)	DIMENSION UNITS: MM; SCALE: 4:1
= 0	DRWN: VYARAPPA	ANGULAR TOL ± 3.0 °	DRWN BY: SKRAJENDRANA; DATE: 2013/11/06
= 0	CHK'D: KDEKOSKI 2017/06/22	4 PLACES ±	CHK'D BY: ; DATE:
= 0	APPR:	3 PLACES ±	
= 0		2 PLACES ± 0.1	APPR BY: ; DATE:
= 0		1 PLACE ± 0.2	
= 0		0 PLACES ± 0.5	DRAWING SIZE: D; THIRD ANGLE PROJECTION
= 0	REV: A15	DRAFT WHERE APPLICABLE MUST REMAIN WITHIN DIMENSIONS	

molex®

1.2MM 1X2, 1X3 BLADE
SEALED ASSEMBLY CABLE SEAL

PRODUCT CUSTOMER DRAWING

SERIES	MATERIAL NUMBER	CUSTOMER
34899	SEE BOM	GENERAL MARKET

DOCUMENT NUMBER	DOC TYPE	DOC PART	SHEET NUMBER
SD-34899-2001	PSD	001	4 OF 11

RELEASE STATUS	P1	RELEASE DATE	22.06.2017 19:25:24

TEMPLATE: 000000-00-00-0000-01
REVISION: 01
DATE: 2017-04-06

BLADE SEALED ASSEMBLY

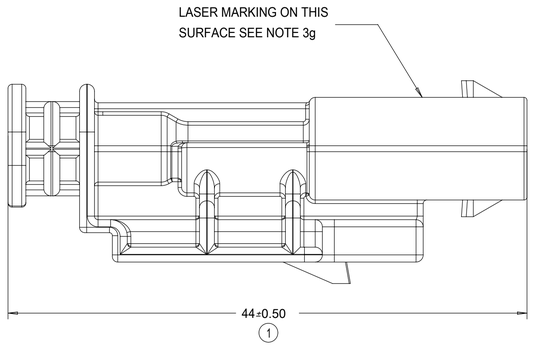

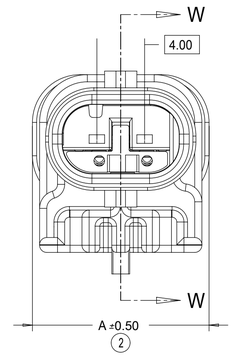

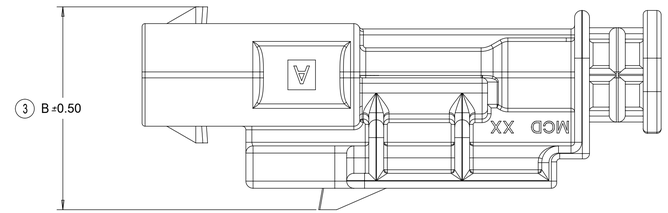

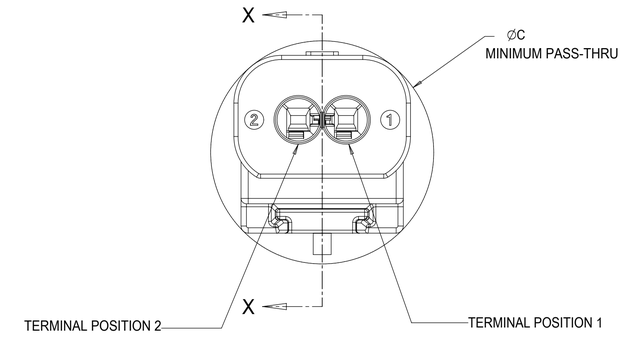

REAR VIEW
(WIRE HARNESS SIDE)

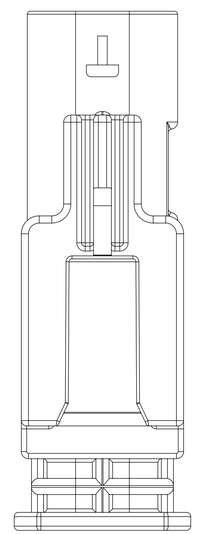

1x3 BLADE SEALED ASSEMBLY, 40G CLIP SLOT	19	16.75	21.75
1x3 BLADE SEALED ASSEMBLY, 11mm CLIP SLOT	19	14.6	20.75
1x3 BLADE SEALED ASSEMBLY, 7mm CLIP SLOT	19	17	20.5
1x2 BLADE SEALED ASSEMBLY, 40G CLIP SLOT	15	16.75	20.25
1x2 BLADE SEALED ASSEMBLY, 11mm CLIP SLOT	15	15.5	19
1x2 BLADE SEALED ASSEMBLY, 7mm CLIP SLOT	15	17	18.75
CONFIGURATION	A	B	C

CHARTED DIMENSIONS

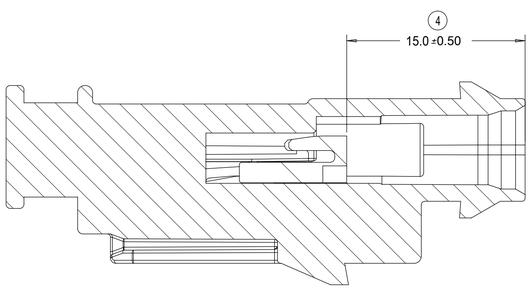

PRIMARY LOCK REINFORCEMENT (PLR) SHOWN
IN THE PRE-STAGED POSITION

SECTION W-W

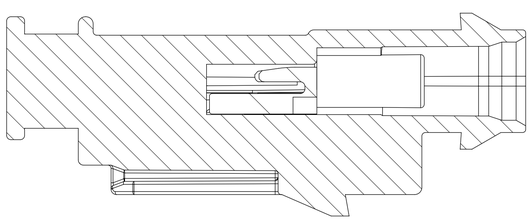

PRIMARY LOCK REINFORCEMENT (PLR) SHOWN
IN THE FINAL-LOCK POSITION

SECTION X-X

QUALITY SYMBOLS: = 0 / = 0 / = 0 / = 0 / = 0 / = 0 / = 0 / = 0

THIS DRAWING CONTAINS INFORMATION THAT IS PROPRIETARY TO MOLEX ELECTRONIC TECHNOLOGIES, LLC AND SHOULD NOT BE USED WITHOUT WRITTEN PERMISSION

EC NO: 117908 — DRWN: VYARAPPA 2017/04/11 — CHK'D: — APPR: KDEKOSKI 2017/06/22

REV: A15

GENERAL TOLERANCES (UNLESS SPECIFIED)

ANGULAR TOL ±	3.0	°
4 PLACES	±	
3 PLACES	±	
2 PLACES	±	0.1
1 PLACE	±	0.2
0 PLACES	±	0.5

DRAFT WHERE APPLICABLE MUST REMAIN WITHIN DIMENSIONS

DIMENSION UNITS: MM — SCALE: 4:1

DRWN BY: SKRAJENDRANA — DATE: 2013/11/06

CHK'D BY — DATE

APPR BY — DATE

DRAWING SIZE: D — THIRD ANGLE PROJECTION

molex®

1.2MM 1X2, 1X3 BLADE
SEALED ASSEMBLY CABLE SEAL

PRODUCT CUSTOMER DRAWING

SERIES	MATERIAL NUMBER	CUSTOMER
34899	SEE BOM	GENERAL MARKET

DOCUMENT NUMBER	DOC TYPE	DOC PART	SHEET NUMBER
SD-34899-2001	PSD	001	5 OF 11

RELEASE STATUS	P1	RELEASE DATE	22.06.2017 19:25:24

FORMAT: 11X8.5 SIZE D
REVISION: D
DATE: 2017/06/06

CONNECTION SYSTEM PACKAGING

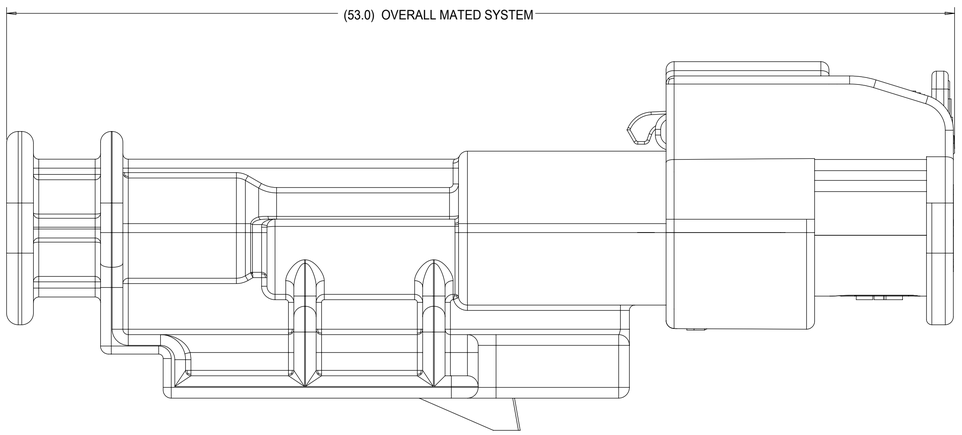

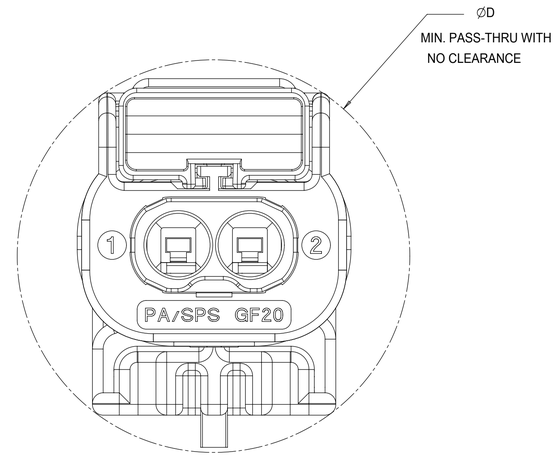

1x3 RECEPTACLE MATED TO 1x3 BLADE, 40 CLIP SLOT	TBD
1x3 RECEPTACLE MATED TO 1x3 BLADE, 11mm CLIP SLOT	24.0
1x3 RECEPTACLE MATED TO 1x3 BLADE, 7mm CLIP SLOT	23.0
1x2 RECEPTACLE MATED TO 1x2 BLADE, 40G CLIP SLOT	23.0
1x2 RECEPTACLE MATED TO 1x2 BLADE, 11mm CLIP SLOT	23.0
1x2 RECEPTACLE MATED TO 1x2 BLADE, 7mm CLIP SLOT	23.0
1.2mm CONNECTION SYSTEM CONFIGURATION	D

CHARTED DIMENSIONS

THIS DRAWING CONTAINS INFORMATION THAT IS PROPRIETARY TO MOLEX ELECTRONIC TECHNOLOGIES, LLC AND SHOULD NOT BE USED WITHOUT WRITTEN PERMISSION

QUALITY SYMBOLS
A = 0
E = 0
B = 0
▼ = 0
C = 0
☒ = 0
■ = 0
◇ = 0

EC NO: 117908
DRWN: VYARAPPA 2017/04/11
CHK'D: KDEKOSKI 2017/06/22
APPR:
REV A15

GENERAL TOLERANCES (UNLESS SPECIFIED)

ANGULAR TOL	±	3.0 °
4 PLACES	±	
3 PLACES	±	
2 PLACES	±	0.1
1 PLACE	±	0.2
0 PLACES	±	0.5

DRAFT WHERE APPLICABLE MUST REMAIN WITHIN DIMENSIONS

DIMENSION UNITS: MM
SCALE: 6:1
DRWN BY: SKRAJENDRANA DATE: 2013/11/06
CHK'D BY DATE
APPR BY DATE
DRAWING SIZE: D
THIRD ANGLE PROJECTION

molex®

1.2MM 1X2, 1X3 BLADE
SEALED ASSEMBLY CABLE SEAL

PRODUCT CUSTOMER DRAWING

SERIES	MATERIAL NUMBER	CUSTOMER
34899	SEE BOM	GENERAL MARKET

DOCUMENT NUMBER	DOC TYPE	DOC PART	SHEET NUMBER
SD-34899-2001	PSD	001	6 OF 11

RELEASE STATUS	P1	RELEASE DATE	22.06.2017 19:25:24

FORMAT: master-tb-prod-D
DESIGN: 0.1
DATE: 20-Oct-2016

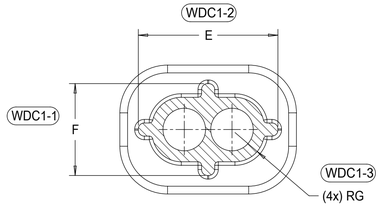

SECTION Z-Z

3 CIRCUIT	18.8	10.8	5.4	15.7	7.7	2.45
2 CIRCUIT	14.8	10.8	5.4	11.7	7.7	2.45
CONFIGURATION	A	B	C	E	F	G
CHARTED DIMENSIONS						

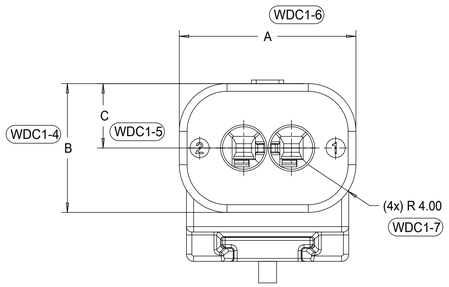

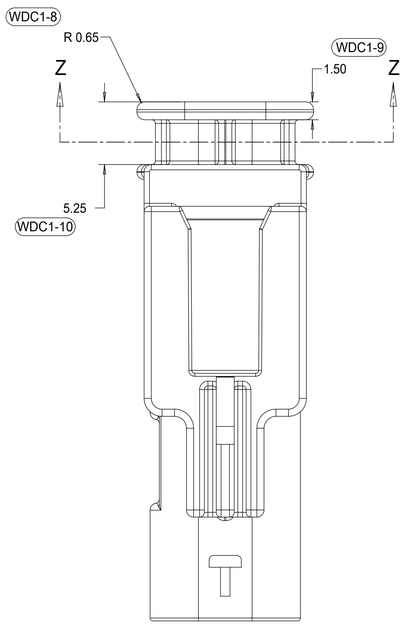

WIRE DRESS COVER
INTERFACE OPTION 1
WIRE DRESS COVERS
NOT AVAILABLE

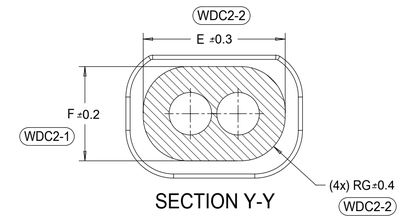

SECTION Y-Y

3 CIRCUIT	18.8	10.8	5.4	15.9	7.9	3.7
2 CIRCUIT	14.8	10.3	5.4	11.9	7.9	3.7
CONFIGURATION	A	B	C	E	F	G
CHARTED DIMENSIONS						

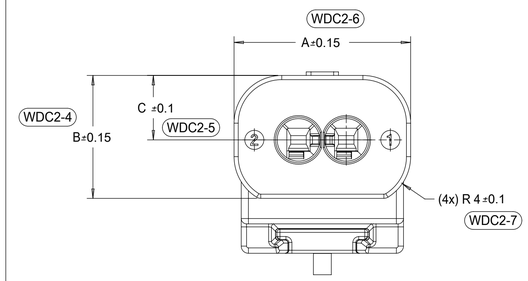

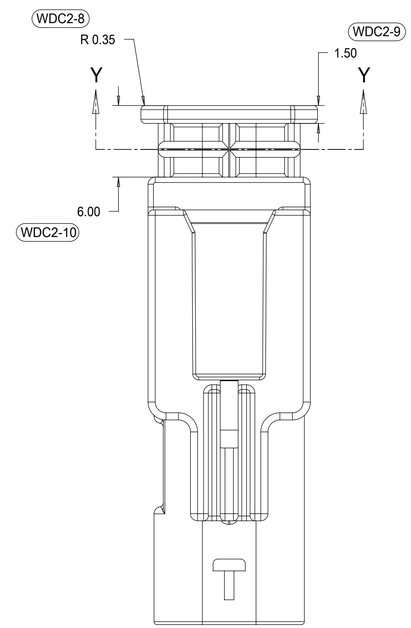

WIRE DRESS COVER
INTERFACE OPTION 2
BASED ON HIRSCHMANN INTERFACE
DRAWING 808-012-xxx REV B5

RELEASE STATUS	P1	RELEASE DATE	22.06.2017 19:25:24

QUALITY SYMBOLS
= 0
= 0
= 0
= 0
= 0
= 0
= 0
= 0

THIS DRAWING CONTAINS INFORMATION THAT IS PROPRIETARY TO MOLEX ELECTRONIC TECHNOLOGIES, LLC AND SHOULD NOT BE USED WITHOUT WRITTEN PERMISSION

EC NO: 117908 2017/04/11
DRWN: VYARAPPA
CHK'D: KDEKOSKI 2017/06/22
APPR:
REV A15

GENERAL TOLERANCES (UNLESS SPECIFIED)
ANGULAR TOL ± 3.0 °
4 PLACES ±
3 PLACES ±
2 PLACES ± 0.1
1 PLACE ± 0.2
0 PLACES ± 0.5
DRAFT WHERE APPLICABLE MUST REMAIN WITHIN DIMENSIONS

DIMENSION UNITS: MM
SCALE: 4:1
DRWN BY: SKRAJENDRANA
DATE: 2013/11/06
CHK'D BY
DATE
APPR BY
DATE
DRAWING SIZE: D
THIRD ANGLE PROJECTION

molex®

1.2MM 1X2, 1X3 BLADE
SEALED ASSEMBLY CABLE SEAL

PRODUCT CUSTOMER DRAWING

SERIES	MATERIAL NUMBER	CUSTOMER
34899	SEE TABLE	GENERAL MARKET

DOCUMENT NUMBER	DOC TYPE	DOC PART	SHEET NUMBER
SD-34899-2001	PSD	001	7 OF 11

1x2 BLADE SEALED ASSEMBLY BOM
FOR WIRE DRESS COVER INTERFACE 1
REFER WIRE DRESS COVER INTERFACE SHEET
FOR DETAILS

ASSEMBLY DESCRIPTION	ASSEMBLY PART NUMBER	WIRE DRESS COVER INTERFACE OPTION																	PRODUCTION TOOL STATUS	COMMENTS
KEYING OPTION E, 11mm CLIP SLOT, STONE GRAY	34899-2043	1																E	CONCEPT	
KEYING OPTION C, 11mm CLIP SLOT, DARK GRAY	34899-2042	1															C		CONCEPT	
KEYING OPTION B, 11mm CLIP SLOT, LIGHT GRAY	34899-2041	1														B			CONCEPT	
KEYING OPTION A, 11mm CLIP SLOT, BLACK	34899-2040	1													A				CONCEPT	
KEYING OPTION E, 11mm CLIP SLOT, YELLOW	34899-2033	1												E					CONCEPT	
KEYING OPTION C, 11mm CLIP SLOT, YELLOW	34899-2032	1											C						CONCEPT	
KEYING OPTION B, 11mm CLIP SLOT, YELLOW	34899-2031	1										B							CONCEPT	
KEYING OPTION A, 11mm CLIP SLOT, YELLOW	34899-2030	1									A								CONCEPT	
KEYING OPTION E, 7mm CLIP SLOT, STONE GRAY	34899-2023	1								E									TOOLED BUT NOT VALIDATED	
KEYING OPTION C, 7mm CLIP SLOT, DARK GRAY	34899-2022	1							C										SALEABLE	
KEYING OPTION B, 7mm CLIP SLOT, LIGHT GRAY	34899-2021	1						B											SALEABLE	
KEYING OPTION A, 7mm CLIP SLOT, BLACK	34899-2020	1					A												SALEABLE	
KEYING OPTION E, 7mm CLIP SLOT, YELLOW	34899-2013	1				E													TOOLED BUT NOT VALIDATED	
KEYING OPTION C, 7mm CLIP SLOT, YELLOW	34899-2012	1			C														SALEABLE	
KEYING OPTION B, 7mm CLIP SLOT, YELLOW	34899-2011	1		B															SALEABLE	
KEYING OPTION A, 7mm CLIP SLOT, YELLOW	34899-2010	1	A																SALEABLE	

DESCRIPTION	COLOR	MATERIAL
PLR	NATURAL	SPS/NYLON GF20
1x2 CONNECTOR HOUSING, KEYING OPTION E 11mm CLIP SLOT	STONE GRAY	SPS/NYLON GF20
1x2 CONNECTOR HOUSING, KEYING OPTION C 11mm CLIP SLOT	DARK GRAY	SPS/NYLON GF20
1x2 CONNECTOR HOUSING, KEYING OPTION B 11mm CLIP SLOT	LIGHT GRAY	SPS/NYLON GF20
1x2 CONNECTOR HOUSING, KEYING OPTION A 11mm CLIP SLOT	BLACK	SPS/NYLON GF20
1x2 CONNECTOR HOUSING, KEYING OPTION E 11mm CLIP SLOT	YELLOW	SPS/NYLON GF20
1x2 CONNECTOR HOUSING, KEYING OPTION C 11mm CLIP SLOT	YELLOW	SPS/NYLON GF20
1x2 CONNECTOR HOUSING, KEYING OPTION B 11mm CLIP SLOT	YELLOW	SPS/NYLON GF20
1x2 CONNECTOR HOUSING, KEYING OPTION A 11mm CLIP SLOT	YELLOW	SPS/NYLON GF20
1x2 CONNECTOR HOUSING, KEYING OPTION E 7mm CLIP SLOT	STONE GRAY	SPS/NYLON GF20
1x2 CONNECTOR HOUSING, KEYING OPTION C 7mm CLIP SLOT	DARK GRAY	SPS/NYLON GF20
1x2 CONNECTOR HOUSING, KEYING OPTION B 7mm CLIP SLOT	LIGHT GRAY	SPS/NYLON GF20
1x2 CONNECTOR HOUSING, KEYING OPTION A 7mm CLIP SLOT	BLACK	SPS/NYLON GF20
1x2 CONNECTOR HOUSING, KEYING OPTION E 7mm CLIP SLOT	YELLOW	SPS/NYLON GF20
1x2 CONNECTOR HOUSING, KEYING OPTION C 7mm CLIP SLOT	YELLOW	SPS/NYLON GF20
1x2 CONNECTOR HOUSING, KEYING OPTION B 7mm CLIP SLOT	YELLOW	SPS/NYLON GF20
1x2 CONNECTOR HOUSING, KEYING OPTION A 7mm CLIP SLOT	YELLOW	SPS/NYLON GF20

BOM/APPLICABLE COMPONENTS TABLE

LEGEND TABLE

ABREVIATION	COMPONENT
A	CONNECTOR HOUSING KEYING OPTION A
B	CONNECTOR HOUSING KEYING OPTION B
C	CONNECTOR HOUSING KEYING OPTION C
E	CONNECTOR HOUSING KEYING OPTION E

QUALITY SYMBOLS
= 0
= 0
= 0
= 0
= 0
= 0
= 0
= 0
= 0

THIS DRAWING CONTAINS INFORMATION THAT IS PROPRIETARY TO MOLEX ELECTRONIC TECHNOLOGIES, LLC AND SHOULD NOT BE USED WITHOUT WRITTEN PERMISSION

EC NO: 117908
DRWN: VYARAPPA 2017/04/11
CHK'D: KDEKOSKI 2017/06/22
APPR:
REV A15

GENERAL TOLERANCES (UNLESS SPECIFIED)
ANGULAR TOL ± 3.0 °
4 PLACES ±
3 PLACES ±
2 PLACES ± 0.1
1 PLACE ± 0.2
0 PLACES ± 0.5
DRAFT WHERE APPLICABLE MUST REMAIN WITHIN DIMENSIONS

DIMENSION UNITS: MM
SCALE: 2:1
DRWN BY: SKRAJENDRANA DATE: 2013/11/06
CHK'D BY DATE
APPR BY DATE
DRAWING SIZE: D
THIRD ANGLE PROJECTION

molex®

1.2MM 1X2, 1X3 BLADE
SEALED ASSEMBLY CABLE SEAL

PRODUCT CUSTOMER DRAWING

SERIES	MATERIAL NUMBER	CUSTOMER
34899	SEE BOM	GENERAL MARKET

DOCUMENT NUMBER	DOC TYPE	DOC PART	SHEET NUMBER
SD-34899-2001	PSD	001	8 OF 11

RELEASE STATUS	P1	RELEASE DATE	22.06.2017 19:25:24

FORMAT: model-fit-print
REVISION: 15
DATE: 2017/06/06

1x2 BLADE SEALED ASSEMBLY BOM
FOR WIRE DRESS COVER INTERFACE 2
REFER WIRE DRESS COVER INTERFACE SHEET
FOR DETAILS

ASSEMBLY DESCRIPTION	ASSEMBLY PART NUMBER	WIRE DRESS COVER INTERFACE OPTION											PRODUCTION TOOL STATUS	COMMENTS
KEYING OPTION A, 40G CLIP SLOT, BLACK	34899-2060	2										A	OK TO TOOL	
KEYING OPTION A, 40G CLIP SLOT, YELLOW	34899-2050	2									A		OK TO TOOL	
KEYING OPTION E, 7mm CLIP SLOT, STONE GRAY	34899-2083	2								E			OK TO TOOL	
KEYING OPTION C, 7mm CLIP SLOT, DARK GRAY	34899-2082	2							C				SALEABLE	
KEYING OPTION B, 7mm CLIP SLOT, LIGHT GRAY	34899-2081	2						B					SALEABLE	
KEYING OPTION A, 7mm CLIP SLOT, BLACK	34899-2080	2					A						SALEABLE	
KEYING OPTION E, 7mm CLIP SLOT, YELLOW	34899-2073	2				E							OK TO TOOL	
KEYING OPTION C, 7mm CLIP SLOT, YELLOW	34899-2072	2			C								SALEABLE	
KEYING OPTION B, 7mm CLIP SLOT, YELLOW	34899-2071	2		B									SALEABLE	
KEYING OPTION A, 7mm CLIP SLOT, YELLOW	34899-2070	2	A										SALEABLE	

DESCRIPTION	COLOR	MATERIAL
PLR	NATURAL	SPS/NYLON GF20
1x2 CONNECTOR HOUSING, KEYING OPTION A 40G CLIP SLOT	BLACK	SPS/NYLON GF20
1x2 CONNECTOR HOUSING, KEYING OPTION A 40G CLIP SLOT	YELLOW	SPS/NYLON GF20
1x2 CONNECTOR HOUSING, KEYING OPTION E 7mm CLIP SLOT	STONE GRAY	SPS/NYLON GF20
1x2 CONNECTOR HOUSING, KEYING OPTION C 7mm CLIP SLOT	DARK GRAY	SPS/NYLON GF20
1x2 CONNECTOR HOUSING, KEYING OPTION B 7mm CLIP SLOT	LIGHT GRAY	SPS/NYLON GF20
1x2 CONNECTOR HOUSING, KEYING OPTION A 7mm CLIP SLOT	BLACK	SPS/NYLON GF20
1x2 CONNECTOR HOUSING, KEYING OPTION E 7mm CLIP SLOT	YELLOW	SPS/NYLON GF20
1x2 CONNECTOR HOUSING, KEYING OPTION C 7mm CLIP SLOT	YELLOW	SPS/NYLON GF20
1x2 CONNECTOR HOUSING, KEYING OPTION B 7mm CLIP SLOT	YELLOW	SPS/NYLON GF20
1x2 CONNECTOR HOUSING, KEYING OPTION A 7mm CLIP SLOT	YELLOW	SPS/NYLON GF20

BOM/APPLICABLE COMPONENTS TABLE

LEGEND TABLE

ABREVIATION	COMPONENT
A	CONNECTOR HOUSING KEYING OPTION A
B	CONNECTOR HOUSING KEYING OPTION B
C	CONNECTOR HOUSING KEYING OPTION C
E	CONNECTOR HOUSING KEYING OPTION E

QUALITY SYMBOLS: = 0 / = 0 / = 0 / = 0 / = 0 / = 0 / = 0 / = 0

THIS DRAWING CONTAINS INFORMATION THAT IS PROPRIETARY TO MOLEX ELECTRONIC TECHNOLOGIES, LLC AND SHOULD NOT BE USED WITHOUT WRITTEN PERMISSION

EC NO: 117908 — DRWN: VYARAPPA 2017/04/11 — CHK'D: — APPR: KDEKOSKI 2017/06/22 — REV A15

GENERAL TOLERANCES (UNLESS SPECIFIED): ANGULAR TOL ± 3.0 °; 4 PLACES ±; 3 PLACES ±; 2 PLACES ± 0.1; 1 PLACE ± 0.2; 0 PLACES ± 0.5; DRAFT WHERE APPLICABLE MUST REMAIN WITHIN DIMENSIONS

DIMENSION UNITS: MM — SCALE:
DRWN BY: SKRAJENDRANA — DATE: 2013/11/06
CHK'D BY — DATE
APPR BY — DATE
DRAWING SIZE: D — THIRD ANGLE PROJECTION

molex®

1.2MM 1X2, 1X3 BLADE
SEALED ASSEMBLY CABLE SEAL

PRODUCT CUSTOMER DRAWING

SERIES	MATERIAL NUMBER	CUSTOMER
34899	SEE BOM	GENERAL MARKET

DOCUMENT NUMBER	DOC TYPE	DOC PART	SHEET NUMBER
SD-34899-2001	PSD	001	9 OF 11

RELEASE STATUS	P1	RELEASE DATE	22.06.2017 19:25:24

Creation date/time: 22.06.2017 19:25:24
REVISION: 01
DATE: 2017/06/06

1x3 BLADE SEALED ASSEMBLY BOM FOR WIRE DRESS COVER INTERFACE 1 REFER WIRE DRESS COVER INTERFACE SHEET FOR DETAILS

ASSEMBLY DESCRIPTION	ASSEMBLY PART NUMBER	WIRE DRESS COVER INTERFACE OPTION																	PRODUCTION TOOL STATUS	COMMENTS	MODEL NUMBER
KEYING OPTION D, 11mm CLIP SLOT, STONE GRAY	34899-3043	1																D	TOOLED BUT NOT VALIDATED		EM-34899-3033
KEYING OPTION C, 11mm CLIP SLOT, DARK GRAY	34899-3042	1															C		TOOLED BUT NOT VALIDATED		EM-34899-3032
KEYING OPTION B, 11mm CLIP SLOT, LIGHT GRAY	34899-3041	1														B			SALEABLE		EM-34899-3031
KEYING OPTION A, 11mm CLIP SLOT, BLACK	34899-3040	1													A				SALEABLE		EM-34899-3030
KEYING OPTION D, 11mm CLIP SLOT, YELLOW	34899-3033	1												D					TOOLED BUT NOT VALIDATED		EM-34899-3033
KEYING OPTION C, 11mm CLIP SLOT, YELLOW	34899-3032	1											C						TOOLED BUT NOT VALIDATED		EM-34899-3032
KEYING OPTION B, 11mm CLIP SLOT, YELLOW	34899-3031	1										B							SALEABLE		EM-34899-3031
KEYING OPTION A, 11mm CLIP SLOT, YELLOW	34899-3030	1									A								SALEABLE		EM-34899-3030
KEYING OPTION D, 7mm CLIP SLOT, STONE GRAY	34899-3023	1								D									TOOLED BUT NOT VALIDATED		EM-34899-3013
KEYING OPTION C, 7mm CLIP SLOT, DARK GRAY	34899-3022	1							C										TOOLED BUT NOT VALIDATED		EM-34899-3012
KEYING OPTION B, 7mm CLIP SLOT, LIGHT GRAY	34899-3021	1						B											SALEABLE		EM-34899-3011
KEYING OPTION A, 7mm CLIP SLOT, BLACK	34899-3020	1					A												SALEABLE		EM-34899-3010
KEYING OPTION D, 7mm CLIP SLOT, YELLOW	34899-3013	1				D													TOOLED BUT NOT VALIDATED		EM-34899-3013
KEYING OPTION C, 7mm CLIP SLOT, YELLOW	34899-3012	1			C														TOOLED BUT NOT VALIDATED		EM-34899-3012
KEYING OPTION B, 7mm CLIP SLOT, YELLOW	34899-3011	1		B															SALEABLE		EM-34899-3011
KEYING OPTION A, 7mm CLIP SLOT, YELLOW	34899-3010	1	A																SALEABLE		EM-34899-3010

DESCRIPTION	COLOR	MATERIAL
PLR	NATURAL	SPS/NYLON GF20
1x3 CONNECTOR HOUSING, KEYING OPTION D 11mm CLIP SLOT	STONE GRAY	SPS/NYLON GF20
1x3 CONNECTOR HOUSING, KEYING OPTION C 11mm CLIP SLOT	DARK GRAY	SPS/NYLON GF20
1x3 CONNECTOR HOUSING, KEYING OPTION B 11mm CLIP SLOT	LIGHT GRAY	SPS/NYLON GF20
1x3 CONNECTOR HOUSING, KEYING OPTION A 11mm CLIP SLOT	BLACK	SPS/NYLON GF20
1x3 CONNECTOR HOUSING, KEYING OPTION D 11mm CLIP SLOT	YELLOW	SPS/NYLON GF20
1x3 CONNECTOR HOUSING, KEYING OPTION C 11mm CLIP SLOT	YELLOW	SPS/NYLON GF20
1x3 CONNECTOR HOUSING, KEYING OPTION B 11mm CLIP SLOT	YELLOW	SPS/NYLON GF20
1x3 CONNECTOR HOUSING, KEYING OPTION A 11mm CLIP SLOT	YELLOW	SPS/NYLON GF20
1x3 CONNECTOR HOUSING, KEYING OPTION D 7mm CLIP SLOT	STONE GRAY	SPS/NYLON GF20
1x3 CONNECTOR HOUSING, KEYING OPTION C 7mm CLIP SLOT	DARK GRAY	SPS/NYLON GF20
1x3 CONNECTOR HOUSING, KEYING OPTION B 7mm CLIP SLOT	LIGHT GRAY	SPS/NYLON GF20
1x3 CONNECTOR HOUSING, KEYING OPTION A 7mm CLIP SLOT	BLACK	SPS/NYLON GF20
1x3 CONNECTOR HOUSING, KEYING OPTION D 7mm CLIP SLOT	YELLOW	SPS/NYLON GF20
1x3 CONNECTOR HOUSING, KEYING OPTION C 7mm CLIP SLOT	YELLOW	SPS/NYLON GF20
1x3 CONNECTOR HOUSING, KEYING OPTION B 7mm CLIP SLOT	YELLOW	SPS/NYLON GF20
1x3 CONNECTOR HOUSING, KEYING OPTION A 7mm CLIP SLOT	YELLOW	SPS/NYLON GF20

BOM/APPLICABLE COMPONENTS TABLE

LEGEND TABLE

ABREVIATION	COMPONENT
A	CONNECTOR HOUSING KEYING OPTION A
B	CONNECTOR HOUSING KEYING OPTION B
C	CONNECTOR HOUSING KEYING OPTION C
D	CONNECTOR HOUSING KEYING OPTION D

QUALITY SYMBOLS

= 0
= 0
= 0
= 0
= 0
= 0
= 0
= 0

THIS DRAWING CONTAINS INFORMATION THAT IS PROPRIETARY TO MOLEX ELECTRONIC TECHNOLOGIES, LLC AND SHOULD NOT BE USED WITHOUT WRITTEN PERMISSION

EC NO: 117908 2017/04/11
DRWN: VYARAPPA
CHK'D: KDEKOSKI 2017/06/22
APPR:
REV A15

GENERAL TOLERANCES (UNLESS SPECIFIED)

ANGULAR TOL	±	3.0 °
4 PLACES	±	
3 PLACES	±	
2 PLACES	±	0.1
1 PLACE	±	0.2
0 PLACES	±	0.5

DRAFT WHERE APPLICABLE MUST REMAIN WITHIN DIMENSIONS

DIMENSION UNITS: MM
SCALE:
DRWN BY: SKRAJENDRANA DATE: 2013/11/06
CHK'D BY: DATE:
APPR BY: DATE:
DRAWING SIZE: D
THIRD ANGLE PROJECTION

molex®

1.2MM 1X2, 1X3 BLADE
SEALED ASSEMBLY CABLE SEAL

PRODUCT CUSTOMER DRAWING

SERIES	MATERIAL NUMBER	CUSTOMER
34899	SEE BOM	GENERAL MARKET

DOCUMENT NUMBER	DOC TYPE	DOC PART	SHEET NUMBER
SD-34899-2001	PSD	001	10 OF 11

RELEASE STATUS	P1	RELEASE DATE	22.06.2017 19:25:24

FORMAT: molex-lb-prod-D
REVISION: 11
DATE: 2017/06/06

1x3 BLADE SEALED ASSEMBLY BOM FOR WIRE DRESS COVER INTERFACE 2 REFER WIRE DRESS COVER INTERFACE SHEET FOR DETAILS

ASSEMBLY DESCRIPTION	ASSEMBLY PART NUMBER	WIRE DRESS COVER INTERFACE OPTION																		PRODUCTION TOOL STATUS	COMMENTS	MODEL NUMBER
KEYING OPTION A, 40-G CLIP SLOT, BLACK	34899-3060	2																	A	CONCEPT		EM-34899-3050
KEYING OPTION A, 40-G CLIP SLOT, YELLOW	34899-3050	2																A		CONCEPT		EM-34899-3050
KEYING OPTION D, 11mm CLIP SLOT, STONE GRAY	34899-3123	2															D			OK TO TOOL		EM-34899-3033
KEYING OPTION C, 11mm CLIP SLOT, DARK GRAY	34899-3122	2														C				OK TO TOOL		EM-34899-3032
KEYING OPTION B, 11mm CLIP SLOT, LIGHT GRAY	34899-3121	2													B					SALEABLE		EM-34899-3031
KEYING OPTION A, 11mm CLIP SLOT, BLACK	34899-3120	2												A						SALEABLE		EM-34899-3030
KEYING OPTION D, 11mm CLIP SLOT, YELLOW	34899-3113	2											D							OK TO TOOL		EM-34899-3033
KEYING OPTION C, 11mm CLIP SLOT, YELLOW	34899-3112	2										C								OK TO TOOL		EM-34899-3032
KEYING OPTION B, 11mm CLIP SLOT, YELLOW	34899-3111	2									B									SALEABLE		EM-34899-3031
KEYING OPTION A, 11mm CLIP SLOT, YELLOW	34899-3110	2								A										SALEABLE		EM-34899-3030
KEYING OPTION D, 7mm CLIP SLOT, STONE GRAY	34899-3083	2							D											OK TO TOOL		EM-34899-3073
KEYING OPTION C, 7mm CLIP SLOT, DARK GRAY	34899-3082	2						C												OK TO TOOL		EM-34899-3072
KEYING OPTION B, 7mm CLIP SLOT, LIGHT GRAY	34899-3081	2					B													SALEABLE		EM-34899-3071
KEYING OPTION A, 7mm CLIP SLOT, BLACK	34899-3080	2				A														SALEABLE		EM-34899-3070
KEYING OPTION D, 7mm CLIP SLOT, YELLOW	34899-3073	2			D															OK TO TOOL		EM-34899-3073
KEYING OPTION C, 7mm CLIP SLOT, YELLOW	34899-3072	2		C																OK TO TOOL		EM-34899-3072
KEYING OPTION B, 7mm CLIP SLOT, YELLOW	34899-3071	2	B																	SALEABLE		EM-34899-3071
KEYING OPTION A, 7mm CLIP SLOT, YELLOW	34899-3070	2	A																	SALEABLE		EM-34899-3070

DESCRIPTION	COLOR	MATERIAL
PLR	NATURAL	SPS/NYLON GF20
1x3 CONNECTOR HOUSING, KEYING OPTION A 40G CLIP SLOT	BLACK	SPS/NYLON GF20
1x3 CONNECTOR HOUSING, KEYING OPTION A 40G CLIP SLOT	YELLOW	SPS/NYLON GF20
1x3 CONNECTOR HOUSING, KEYING OPTION D 11mm CLIP SLOT	STONE GRAY	SPS/NYLON GF20
1x3 CONNECTOR HOUSING, KEYING OPTION C 11mm CLIP SLOT	DARK GRAY	SPS/NYLON GF20
1x3 CONNECTOR HOUSING, KEYING OPTION B 11mm CLIP SLOT	LIGHT GRAY	SPS/NYLON GF20
1x3 CONNECTOR HOUSING, KEYING OPTION A 11mm CLIP SLOT	BLACK	SPS/NYLON GF20
1x3 CONNECTOR HOUSING, KEYING OPTION D 11mm CLIP SLOT	YELLOW	SPS/NYLON GF20
1x3 CONNECTOR HOUSING, KEYING OPTION C 11mm CLIP SLOT	YELLOW	SPS/NYLON GF20
1x3 CONNECTOR HOUSING, KEYING OPTION B 11mm CLIP SLOT	YELLOW	SPS/NYLON GF20
1x3 CONNECTOR HOUSING, KEYING OPTION A 11mm CLIP SLOT	YELLOW	SPS/NYLON GF20
1x3 CONNECTOR HOUSING, KEYING OPTION D 7mm CLIP SLOT	STONE GRAY	SPS/NYLON GF20
1x3 CONNECTOR HOUSING, KEYING OPTION C 7mm CLIP SLOT	DARK GRAY	SPS/NYLON GF20
1x3 CONNECTOR HOUSING, KEYING OPTION B 7mm CLIP SLOT	LIGHT GRAY	SPS/NYLON GF20
1x3 CONNECTOR HOUSING, KEYING OPTION A 7mm CLIP SLOT	BLACK	SPS/NYLON GF20
1x3 CONNECTOR HOUSING, KEYING OPTION D 7mm CLIP SLOT	YELLOW	SPS/NYLON GF20
1x3 CONNECTOR HOUSING, KEYING OPTION C 7mm CLIP SLOT	YELLOW	SPS/NYLON GF20
1x3 CONNECTOR HOUSING, KEYING OPTION B 7mm CLIP SLOT	YELLOW	SPS/NYLON GF20
1x3 CONNECTOR HOUSING, KEYING OPTION A 7mm CLIP SLOT	YELLOW	SPS/NYLON GF20

BOM/APPLICABLE COMPONENTS TABLE

LEGEND TABLE

ABREVIATION	COMPONENT
A	CONNECTOR HOUSING KEYING OPTION A
B	CONNECTOR HOUSING KEYING OPTION B
C	CONNECTOR HOUSING KEYING OPTION C
D	CONNECTOR HOUSING KEYING OPTION D

QUALITY SYMBOLS: E/A = 0; E/C = 0; E/P = 0; ▼ = 0; E/C = 0; ☒ = 0; ■ = 0; E/C = 0

THIS DRAWING CONTAINS INFORMATION THAT IS PROPRIETARY TO MOLEX ELECTRONIC TECHNOLOGIES, LLC AND SHOULD NOT BE USED WITHOUT WRITTEN PERMISSION

EC NO: 117908 2017/04/11
DRWN: VYARAPPA 2017/06/22
CHK'D: KDEKOSKI
APPR:

REV: A15

GENERAL TOLERANCES (UNLESS SPECIFIED)

ANGULAR TOL	±	3.0 °
4 PLACES	±	
3 PLACES	±	
2 PLACES	±	0.1
1 PLACE	±	0.2
0 PLACES	±	0.5

DRAFT WHERE APPLICABLE MUST REMAIN WITHIN DIMENSIONS

DIMENSION UNITS: MM
SCALE:
DRWN BY: SKRAJENDRANA DATE: 2013/11/06
CHK'D BY: DATE:
APPR BY: DATE:
DRAWING SIZE: D
THIRD ANGLE PROJECTION

molex®

1.2MM 1X2, 1X3 BLADE
SEALED ASSEMBLY CABLE SEAL

PRODUCT CUSTOMER DRAWING

SERIES	MATERIAL NUMBER	CUSTOMER
34899	SEE BOM	GENERAL MARKET

DOCUMENT NUMBER	DOC TYPE	DOC PART	SHEET NUMBER
SD-34899-2001	PSD	001	11 OF 11

RELEASE STATUS	P1	RELEASE DATE	22.06.2017 19:25:24

FORMAT: model-lib-prod-0
REVISION: 11
DATE: 2017-06-06

TABLE OF CONTENTS

SHEET NO.	SHEET DESCRIPTION
1	NOTES
2	1x4 BLADE SEALED ASSEMBLY KEYING CONFIGURATIONS
3	1x6 BLADE SEALED ASSEMBLY KEYING CONFIGURATIONS
4	CLIP SLOT CONFIGURATIONS
5	BLADE SEALED ASSEMBLY
6	CONNECTION SYSTEM PACKAGING
7	WIRE DRESS COVER INTERFACE OPTIONS
8	1x4 BLADE SEALED ASSEMBLY BOM INTERFACE OPTION 1
9	1x4 BLADE SEALED ASSEMBLY BOM INTERFACE OPTION 2
10	1x6 BLADE SEALED ASSEMBLY BOM INTERFACE OPTION 1
11	1x6 BLADE SEALED ASSEMBLY BOM INTERFACE OPTION 2

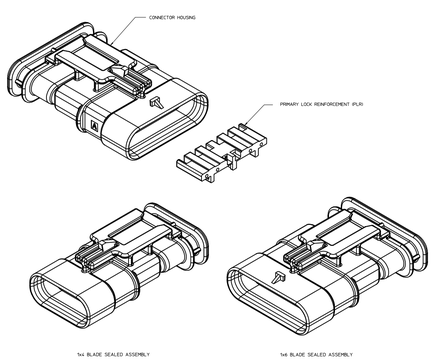

NOTES: VALID UNLESS OTHERWISE SPECIFIED

1. GENERAL
a. APPLICATION SPECIFICATION SEE: AS-34900-0001
CONTAINS PRODUCT INTRODUCTION, PRODUCT SUMMARY, CONNECTOR ASSEMBLY, PACKAGING INFORMATION, CONNECTOR MATING, WIRE INSTRUCTIONS, ELECTRICAL CONTINUITY TESTING, PRODUCT SAMPLE, TROUBLESHOOTING.
b. PRODUCT SPECIFICATION SEE: PS-34900-0001
CONTAINS PRODUCT INTRODUCTION, PRODUCT SUMMARY, RATINGS (CURRENT, TEMPERATURE, SEALING, AND FLAMMABILITY), PERFORMANCE, AND TESTING.
c. PACKAGING SPECIFICATION PER MOLEX DRAWING PK-3700-598
d. PARTS MUST BE IN COMPLIANCE TO MOLEX CHEMICAL SUBSTANCES FOR ENVIRONMENT, HEALTH AND SAFETY PROGRAM (EHS-PP-0000-R)
e. DATA MUST BE SUBMITTED UNDER THE MOLEX PART NUMBER TO MDS COMPANY (D4132S0)

2. DESIGN - MATERIALS
a. SEE BOM TABLE

3. DESIGN - GEOMETRY
a. THE CAD MODEL AND GENERATED PART, THE CAD MATHEMATICAL DATA IS THE MASTER FOR THIS PART, FOR DIMENSIONAL OR ANY INFORMATION NOT SHOWN ON THIS DRAWING, ANALYZE THE CAD MODEL.
b. DEFINITIONS AND TOLERANCES PER ASME Y14.5M - 1994 THE YXLSM - 1994
c. EDGES AND UNDERSIDES DETAILS PER DD5975.
d. CORNERS SHOWN AS SHARP TO BE R 0.2 MAX.
e. LETTERING SHALL BE 0.5 HIGH, 0.1 DEEP, 0.25 MAX RECESS PAD, INCLUDES MOLD LOCATION, CAVITY ID, VENDOR IDENTIFICATION, AND CUSTOMER MATERIAL NUMBER.
f. VISUAL DEFECTS SHALL MEET COSMETIC STANDARD PS-45499-002 (Class B)
a. MARKING
b. LASER MARKING:
1. PART NUMBER
2. DAY OF THE YEAR
3. SHIFT
4. YEAR

INSPECTION BALLOON NUMBER LOG

PER DRAWING REVISION: B12

LAST BALLOON NUMBER USED: WDC2-10

ADDED BALLOON NUMBERS: WDC2-1 - WDC2-10

REMOVED BALLOON NUMBERS:

REV	DESCRIPTION
B15	UPDATED BALLOONS 2-1 & 2-2 ON SHEET 7
B14	UPDATED PARTS TO SALEABLE
B13	RELEASED PRIMARY KEYS NON-SIR SALEABLE
B12	UPDATED PLR LOOK UP GEOMETRY
B11	UPDATED WDC INTERFACE PART# TO TOOLED BUT NOT VALIDATED
B10	UPDATED TOLERANCES WDC FEATURES
B9	1X4, 1X6 PART # WIRE DRESS COVER INTERFACE FEATURES OK TO TOOL
B8	1X4 .030 CLIP-SLOT OK TO TOOL
B7	1X4 PART # UPDATED TO "TOOLED BUT NOT VALIDATED"
B6	ADDED 4X0 CLIP-SLOT PART NUMBERS
B5	BOM CORRECTIONS AND UPDATES
B4	BOM CORRECTIONS AND UPDATES
B3	1x4, 1x6 NON-SIR PARTS# OK TO TOOL
B2	1x4 1mm CLIP SLOT PART # OK TO TOOL
B1	1x4 1mm CLIP SLOT PART NUMBERS ADDED
B	ADDED 1x4 INFORMATION
A	OK TO TOOL

ENTER DESCRIPTION	
DRAWN	2012/06/01
CHECKED	2012/06/01
APPROVED	2012/06/01
RELEASED	2012/06/01

QUALITY SYMBOLS	GENERAL TOLERANCES (UNLESS SPECIFIED)		DIMENSION STYLE: MM ONLY
	MM	INCH	
1 PLACE	± ---	± ---	
2 PLACES	± ---	± ---	
3 PLACES	± 0.10	± ---	
4 PLACES	± 0.50	± ---	
1 PLACE	± 0.20	± ---	
2 PLACE	± 0.50	±	
ANGULAR	± 1°		

DRAFT WHERE APPLICABLE
MUST REMAIN
WITHIN DIMENSIONS

B15

DRAWN BY	DATE	
WANGJAMSRO	2012/07/17	
CHECKED BY	DATE	
WXZGHT	2012/07/19	
APPROVED BY	DATE	
WXZGHT	2012/07/24	
MATERIAL: SEE BOM		

SCALE: 4/1
DRAWN UNIT: METRIC
THIRD ANGLE PROJECTION

TITLE: 12MM 1X4, 1X6 BLADE SEALED ASSEMBLY CABLE SEAL

molex

DOCUMENT ID: SD-34899-6001
SHEET NO.: 1 OF 11

THIS DRAWING CONTAINS INFORMATION THAT IS PROPRIETARY TO MOLEX INCORPORATED AND SHOULD NOT BE USED WITHOUT WRITTEN PERMISSION

1x4 BLADE SEALED ASSEMBLY KEYING CONFIGURATIONS. FOR PART NUMBERS REFER TO BOM SHEET.

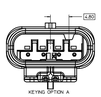

KEYING OPTION A

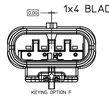

KEYING OPTION F

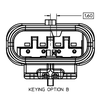

KEYING OPTION B

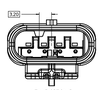

KEYING OPTION G

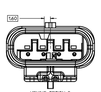

KEYING OPTION C

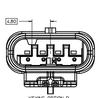

KEYING OPTION D

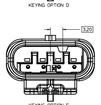

KEYING OPTION E

ENTER DESCRIPTION			QUALITY SYMBOLS	GENERAL TOLERANCES (UNLESS SPECIFIED)	DIMENSION STYLE: MM ONLY	SCALE: 4:1	DRAWN UNITS: METRIC	THIRD ANGLE PROJECTION
DTS				MM / INCH	DRAWN BY: DATE:	TITLE: 12MM 1X4, 1X6 BLADE SEALED ASSEMBLY CABLE SEAL		
			2 PLACES	± .--- / ± .---	RANGUAMBROU	2012/07/19		
			3 PLACES	± .--- / ± .---	CHECKED BY: DATE:			
			4 PLACES	± 0.50 / ± .---	MUZZAFI	2012/07/19		
			5 PLACES	± 0.20 / ± .---	APPROVED BY: DATE:			
			6 PLACES	± 0.05 / ± .---	MUZZAFI	2012/07/24	molex	
			ANGULAR: ± 3 °		MATERIAL NO.: SEE BOM	DOCUMENT NO.: SD-34899-6001		SHEET NO.: 2 OF 11
			DRAFT WHERE APPLICABLE MUST REMAIN WITHIN DIMENSIONS		SIZE:	THIS DRAWING CONTAINS INFORMATION THAT IS PROPRIETARY TO MOLEX INCORPORATED AND SHOULD NOT BE USED WITHOUT WRITTEN PERMISSION		

1x6 BLADE SEALED ASSEMBLY KEYING CONFIGURATIONS. FOR PART NUMBERS REFER TO BOM SHEET.

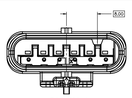

KEYING OPTION A

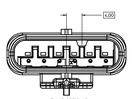

KEYING OPTION B

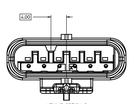

KEYING OPTION C

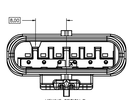

KEYING OPTION D

ENTER DESCRIPTION			QUALITY SYMBOLS	GENERAL TOLERANCES (UNLESS SPECIFIED)	DIMENSION STYLE MM ONLY	SCALE 4:1	DRAWN UNITS METRIC	THIRD ANGLE PROJECTION
DTS				MM / INCH	DRAWN BY	DATE	TITLE	
				± 0.25 / ± .010	MANOLAMBROU	2012/07/19	12MM 1X4, 1X6 BLADE SEALED ASSEMBLY CABLE SEAL	
				± .4 / ± .015	CHECKED BY	DATE		
				± .1 / ± .005	MKOSHY	2012/07/19		
				± 0.10 / ± 0.005	APPROVED BY	DATE		
				± 0.05 / ± 0.002	MKOSHY	2012/07/24		
				ANGULAR: ± 3 °	MATERIAL NO.	DOCUMENT NO.		SHEET NO.
				DRAFT WHERE APPLICABLE MUST REMAIN WITHIN DIMENSIONS	SEE BOM	SD-34899-6001		3 OF 11
					SIZE	THIS DRAWING CONTAINS INFORMATION THAT IS PROPRIETARY TO MOLEX INCORPORATED AND SHOULD NOT BE USED WITHOUT WRITTEN PERMISSION		

PS-70886-017-P_MR-F
Rev. 5 2012/07/11

CLIP-SLOT CONFIGURATIONS. FOR PART NUMBERS REFER TO BOM SHEET.

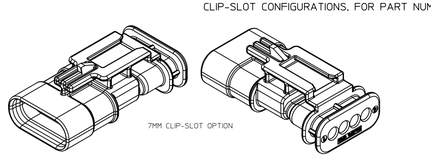

7MM CLIP-SLOT OPTION

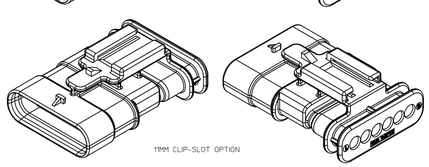

11MM CLIP-SLOT OPTION

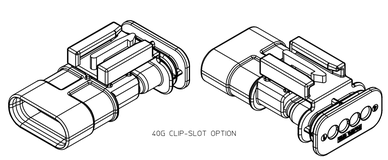

40G CLIP-SLOT OPTION

ENTER DESCRIPTION			
DTS			
PROPRIETARY INFORMATION			
ACCESS RESTRICTED			
REV			

QUALITY SYMBOLS	GENERAL TOLERANCES (UNLESS SPECIFIED)		
		MM	INCH
	1 DIGITS	± ---	± ---
	2 PLACES	± ---	± ---
	3 PLACES	± 0.10	± ---
	4 PLACES	± 0.05	± ---
	5 PLACE	± 0.05	± ---
	ANGULAR ± 3 °		

DRAFT WHERE APPLICABLE NOT REMAIN WITHIN DIMENSIONS

DIMENSION STYLE	SCALE	ORIGIN UNITS
MM ONLY	4:1	METRIC
DRAWN BY	DATE	TITLE
MANOLAMBROU	2012/07/19	12MM 1X4, 1X6 BLADE SEALED ASSEMBLY CABLE SEAL
CHECKED BY	DATE	
MCOSH	2012/07/19	
APPROVED BY	DATE	
MCOSH	2012/07/24	
MATERIAL NO.	DOCUMENT NO.	SHEET NO.
SEE BOM	SD-34899-6001	1 OF 11

THIS DRAWING CONTAINS INFORMATION THAT IS PROPRIETARY TO MOLEX INCORPORATED AND SHOULD NOT BE USED WITHOUT WRITTEN PERMISSION

THIRD ANGLE PROJECTION

molex

PS_11MM_1X_4_6_A_R
Rev. 5 2012/07/11

BLADE SEALED ASSEMBLY

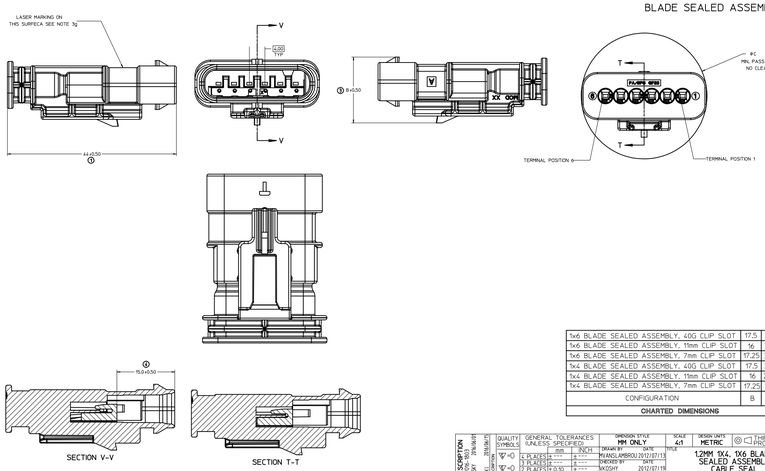

1x6 BLADE SEALED ASSEMBLY, 40G CLIP SLOT	17.5	32.75
1x6 BLADE SEALED ASSEMBLY, 11mm CLIP SLOT	16	32.75
1x6 BLADE SEALED ASSEMBLY, 7mm CLIP SLOT	17.25	32.75
1x4 BLADE SEALED ASSEMBLY, 40G CLIP SLOT	17.5	25.25
1x4 BLADE SEALED ASSEMBLY, 11mm CLIP SLOT	16	24.75
1x4 BLADE SEALED ASSEMBLY, 7mm CLIP SLOT	17.25	24.75
CONFIGURATION	B	C
CHARTED DIMENSIONS		

ENTER DESCRIPTION
DTS 12-20-2011 TONJONJALIST
DTS 12-20-2011 TONJONJALIST
APPROVED BY DTS 12-20-2011
REV

QUALITY SYMBOLS
X DECIMALS ±0.1
X PLACES ±0.05
X PLACES ±0.02
X PLACES ±0.010
X PLACE ±0.005
ANGULAR ±1.5°

GENERAL TOLERANCES (UNLESS SPECIFIED)

MM	INCH
±0.1	±0.004
±0.05	±0.002
±0.02	±0.001
±0.010	±0.0005
±0.005	±0.0002

DRAFT WHERE APPLICABLE MUST REMAIN WITHIN DIMENSIONS

DIMENSION STYLE: MM ONLY
SCALE: 4:1
ORIGIN UNITS: METRIC
THIRD ANGLE PROJECTION

DRAWN BY: ANGULARBOU 2012/07/19
CHECKED BY: MCZGHT 2012/07/19
APPROVED BY: MCZGHT 2012/07/24

TITLE: 12MM 1X4, 1X6 BLADE SEALED ASSEMBLY CABLE SEAL

molex

MATERIAL NO.: SEE BOM
DOCUMENT NO.: SD-34899-6001
SHEET NO.: 5 OF 11

THIS DRAWING CONTAINS INFORMATION THAT IS PROPRIETARY TO MOLEX INCORPORATED AND SHOULD NOT BE USED WITHOUT WRITTEN PERMISSION

CONNECTION SYSTEM PACKAGING

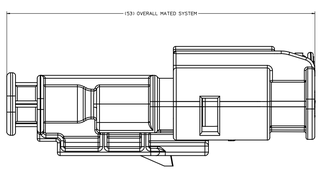

MODEL USED "AM-DD-S-006-1-20"

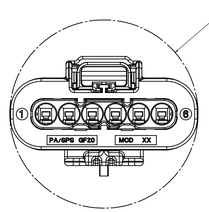

1x6 RECEPTACLE MATED TO 1x6 BLADE, 40 CLIP SLOT	TBD
1x6 RECEPTACLE MATED TO 1x6 BLADE, 19mm CLIP SLOT	33.5
1x6 RECEPTACLE MATED TO 1x6 BLADE, 7mm CLIP SLOT	33.5
1x4 RECEPTACLE MATED TO 1x4 BLADE, 40G CLIP SLOT	25.50
1x4 RECEPTACLE MATED TO 1x4 BLADE, 19mm CLIP SLOT	25.50
1x4 RECEPTACLE MATED TO 1x4 BLADE, 7mm CLIP SLOT	25.50
12mm CONNECTION SYSTEM CONFIGURATION	D
CHARTED DIMENSIONS	

ENTER DESCRIPTION			
DRAWN BY			
CHECKED BY			
APPROVED BY			
QTY			
QUALITY SYMBOLS	GENERAL TOLERANCES (UNLESS SPECIFIED)	DIMENSION STYLE: MM ONLY	SCALE: 6/1
		DRAWN BY: MANOLAMBROU	DATE: 2012/07/19
		CHECKED BY: MKOSHY	DATE: 2012/07/19
		APPROVED BY: MKOSHY	DATE: 2012/07/24
		MATERIAL NO.: SEE BOM	DOCUMENT NO.: SD-34899-6001
			SHEET NO.: 6 OF 11

DESIGN UNITS: METRIC

THIRD ANGLE PROJECTION

12MM 1X4, 1X6 BLADE SEALED ASSEMBLY CABLE SEAL

molex

THIS DRAWING CONTAINS INFORMATION THAT IS PROPRIETARY TO MOLEX INCORPORATED AND SHOULD NOT BE USED WITHOUT WRITTEN PERMISSION

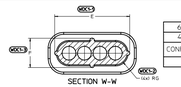

6 CIRCUIT	30.8	10.8	5.4	27.4	7.6	3.0
4 CIRCUIT	22.8	10.8	5.4	19.4	7.6	3.0
CONFIGURATION	A	B	C	E	F	G

CHARTED DIMENSIONS

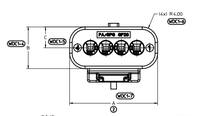

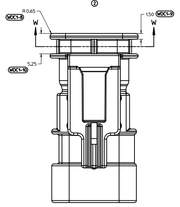

WIRE DRESS COVER
INTERFACE OPTION 1
WIRE DRESS COVERS
NOT AVAILABLE

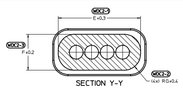

6 CIRCUIT	32.2	12.2	6.1	29.3	9.3	4.2
4 CIRCUIT	24.2	12.2	6.1	21.3	9.3	4.2
CONFIGURATION	A	B	C	E	F	G

CHARTED DIMENSIONS

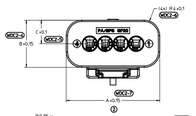

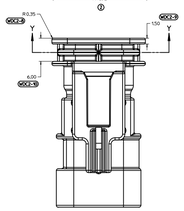

WIRE DRESS COVER
INTERFACE OPTION 2
BASED ON HIRSCHMANN INTERFACE
DRAWING 808-012-xxx REV B5

ENTER DESCRIPTION
DRAWN BY: 78763-0015
CHECKED BY: 78763-0015
APPROVED BY: 78763-0015
DATE: 2012/07/24
SIZE: B1

QUALITY SYMBOLS

GENERAL TOLERANCES (UNLESS SPECIFIED)

	mm	inch
1 PLACE	±.0	±.---
2 PLACES	±.---	±.---
3 PLACES	±.0.10	±.---
4 PLACES	±.0.05	±.---
5 PLACE	±.0.05	±.---
ANGULAR ± °		

DRAFT WHERE APPLICABLE MUST REMAIN WITHIN DIMENSIONS

DIMENSION STYLE: MM ONLY
SCALE: 4:1
DRAWN UNITS: METRIC
THIRD ANGLE PROJECTION

DRAWN BY: ANGULAMBROU 2012/07/19
CHECKED BY: 2012/07/19
MCCOHT 2012/07/19
APPROVED BY: MCCOHT 2012/07/24

TITLE: 12MM TX4, TX6 BLADE SEALED ASSEMBLY CABLE SEAL

molex

MATERIAL NO: SEE TABLE
DOCUMENT NO: SD-34899-6001
SHEET NO: 7 OF 11

THIS DRAWING CONTAINS INFORMATION THAT IS PROPRIETARY TO MOLEX INCORPORATED AND SHOULD NOT BE USED WITHOUT WRITTEN PERMISSION

1x4 BLADE SEALED ASSEMBLY BOM
FOR WIRE DRESS COVER INTERFACE 1
REFER WIRE DRESS INTERFACE SHEET
FOR DETAILS

ASSEMBLY DESCRIPTION	ASSEMBLY NUMBER	PRODUCTION TOOL STATUS	COMMENTS
KEYING OPTION G, 7mm CLIP SLOT, LIGHT GRAY	34899-6043	CONCEPT	
KEYING OPTION F, 7mm CLIP SLOT, BLACK	34899-6042	CONCEPT	
KEYING OPTION E, 7mm CLIP SLOT, DARK GRAY	34899-6041	CONCEPT	
KEYING OPTION D, 7mm CLIP SLOT, LIGHT GRAY	34899-6040	CONCEPT	
KEYING OPTION C, 7mm CLIP SLOT, DARK GRAY	34899-6039	CONCEPT	
KEYING OPTION B, 7mm CLIP SLOT, STONE GRAY	34899-6038	CONCEPT	
KEYING OPTION A, 7mm CLIP SLOT, BLACK	34899-6037	CONCEPT	
KEYING OPTION G, 7mm CLIP SLOT, YELLOW	34899-6036	CONCEPT	
KEYING OPTION F, 7mm CLIP SLOT, YELLOW	34899-6035	CONCEPT	
KEYING OPTION E, 7mm CLIP SLOT, YELLOW	34899-6034	CONCEPT	
KEYING OPTION D, 7mm CLIP SLOT, YELLOW	34899-6033	CONCEPT	
KEYING OPTION C, 7mm CLIP SLOT, YELLOW	34899-6032	CONCEPT	
KEYING OPTION B, 7mm CLIP SLOT, YELLOW	34899-6031	CONCEPT	
KEYING OPTION A, 7mm CLIP SLOT, YELLOW	34899-6030	CONCEPT	
KEYING OPTION G, 7mm CLIP SLOT, LIGHT GRAY	34899-2026	CALEABLE	
KEYING OPTION F, 7mm CLIP SLOT, BLACK	34899-2025	CALEABLE	
KEYING OPTION E, 7mm CLIP SLOT, DARK GRAY	34899-2024	CALEABLE	
KEYING OPTION D, 7mm CLIP SLOT, LIGHT GRAY	34899-2023	CALEABLE	
KEYING OPTION C, 7mm CLIP SLOT, DARK GRAY	34899-2022	CALEABLE	
KEYING OPTION B, 7mm CLIP SLOT, STONE GRAY	34899-2021	CALEABLE	
KEYING OPTION A, 7mm CLIP SLOT, BLACK	34899-2020	CALEABLE	
KEYING OPTION G, 7mm CLIP SLOT, YELLOW	34899-2019	CALEABLE	
KEYING OPTION F, 7mm CLIP SLOT, YELLOW	34899-2018	CALEABLE	
KEYING OPTION E, 7mm CLIP SLOT, YELLOW	34899-2016	CALEABLE	
KEYING OPTION D, 7mm CLIP SLOT, YELLOW	34899-2015	CALEABLE	
KEYING OPTION C, 7mm CLIP SLOT, YELLOW	34899-2014	CALEABLE	
KEYING OPTION B, 7mm CLIP SLOT, YELLOW	34899-2011	CALEABLE	
KEYING OPTION A, 7mm CLIP SLOT, YELLOW	34899-2010	CALEABLE	

DESCRIPTION	COLOR	MATERIAL
1x4 CONNECTOR HOUSING, KEYING OPTION G 7mm CLIP SLOT	LIGHT GRAY	SPS/NYLON (PF20)
1x4 CONNECTOR HOUSING, KEYING OPTION F 7mm CLIP SLOT	BLACK	SPS/NYLON (PF20)
1x4 CONNECTOR HOUSING, KEYING OPTION E 7mm CLIP SLOT	DARK GRAY	SPS/NYLON (PF20)
1x4 CONNECTOR HOUSING, KEYING OPTION D 7mm CLIP SLOT	LIGHT GRAY	SPS/NYLON (PF20)
1x4 CONNECTOR HOUSING, KEYING OPTION C 7mm CLIP SLOT	DARK GRAY	SPS/NYLON (PF20)
1x4 CONNECTOR HOUSING, KEYING OPTION B 7mm CLIP SLOT	STONE GRAY	SPS/NYLON (PF20)
1x4 CONNECTOR HOUSING, KEYING OPTION A 7mm CLIP SLOT	BLACK	SPS/NYLON (PF20)
1x4 CONNECTOR HOUSING, KEYING OPTION G 7mm CLIP SLOT	YELLOW	SPS/NYLON (PF20)
1x4 CONNECTOR HOUSING, KEYING OPTION F 7mm CLIP SLOT	YELLOW	SPS/NYLON (PF20)
1x4 CONNECTOR HOUSING, KEYING OPTION E 7mm CLIP SLOT	YELLOW	SPS/NYLON (PF20)
1x4 CONNECTOR HOUSING, KEYING OPTION D 7mm CLIP SLOT	YELLOW	SPS/NYLON (PF20)
1x4 CONNECTOR HOUSING, KEYING OPTION C 7mm CLIP SLOT	YELLOW	SPS/NYLON (PF20)
1x4 CONNECTOR HOUSING, KEYING OPTION B 7mm CLIP SLOT	YELLOW	SPS/NYLON (PF20)
1x4 CONNECTOR HOUSING, KEYING OPTION A 7mm CLIP SLOT	YELLOW	SPS/NYLON (PF20)
1x4 CONNECTOR HOUSING, KEYING OPTION G 7mm CLIP SLOT	LIGHT GRAY	SPS/NYLON (PF20)
1x4 CONNECTOR HOUSING, KEYING OPTION F 7mm CLIP SLOT	BLACK	SPS/NYLON (PF20)
1x4 CONNECTOR HOUSING, KEYING OPTION E 7mm CLIP SLOT	DARK GRAY	SPS/NYLON (PF20)
1x4 CONNECTOR HOUSING, KEYING OPTION D 7mm CLIP SLOT	LIGHT GRAY	SPS/NYLON (PF20)
1x4 CONNECTOR HOUSING, KEYING OPTION C 7mm CLIP SLOT	DARK GRAY	SPS/NYLON (PF20)
1x4 CONNECTOR HOUSING, KEYING OPTION B 7mm CLIP SLOT	STONE GRAY	SPS/NYLON (PF20)
1x4 CONNECTOR HOUSING, KEYING OPTION A 7mm CLIP SLOT	BLACK	SPS/NYLON (PF20)
1x4 CONNECTOR HOUSING, KEYING OPTION G 7mm CLIP SLOT	YELLOW	SPS/NYLON (PF20)
1x4 CONNECTOR HOUSING, KEYING OPTION F 7mm CLIP SLOT	YELLOW	SPS/NYLON (PF20)
1x4 CONNECTOR HOUSING, KEYING OPTION E 7mm CLIP SLOT	YELLOW	SPS/NYLON (PF20)
1x4 CONNECTOR HOUSING, KEYING OPTION D 7mm CLIP SLOT	YELLOW	SPS/NYLON (PF20)
1x4 CONNECTOR HOUSING, KEYING OPTION C 7mm CLIP SLOT	YELLOW	SPS/NYLON (PF20)
1x4 CONNECTOR HOUSING, KEYING OPTION B 7mm CLIP SLOT	YELLOW	SPS/NYLON (PF20)
1x4 CONNECTOR HOUSING, KEYING OPTION A 7mm CLIP SLOT	YELLOW	SPS/NYLON (PF20)

BOM/APPLICABLE COMPONENTS TABLE

LEGEND TABLE	
ABREVIATION	COMPONENT
A	CONNECTOR HOUSING KEYING OPTION A
B	CONNECTOR HOUSING KEYING OPTION B
C	CONNECTOR HOUSING KEYING OPTION C
D	CONNECTOR HOUSING KEYING OPTION D
E	CONNECTOR HOUSING KEYING OPTION E
F	CONNECTOR HOUSING KEYING OPTION F
G	CONNECTOR HOUSING KEYING OPTION G
PLR	PLR

ENTER DESCRIPTION
DO NOT SCALE DRAWING
TOLERANCE ANALYSIS
DTS
DATE: 2016/04/01
DATE: 2016/04/01
DATE: 2016/04/01

QUALITY SYMBOLS
GENERAL TOLERANCES (UNLESS SPECIFIED)
	MM	INCH
2 PLACES	±.00	±.00
3 PLACES	±.00	±.00
4 PLACES	±.00	±.00
5 PLACES	±0.00	±.00
6 PLACE	±0.00	±.00
5 PLACE	±0.000	±.000
ANGULAR ±.5°
DRAFT WHERE APPLICABLE
NOT REMAIN
WITHIN DIMENSIONS

DIMENSION STYLE: MM ONLY
SCALE: 2:1
DESIGN UNITS: METRIC
THIRD ANGLE PROJECTION
DRAWN BY: RANGLAMBROU 2012/07/19
CHECKED BY: DATE
MKOSHY 2012/07/19
APPROVED BY: DATE
MKOSHY 2012/07/24
MATERIAL NO.: SEE BOM
DOCUMENT NO.: SD-34899-6001
SHEET NO.: 8 OF 11
TITLE: 12MM 1X4, 1X6 BLADE SEALED ASSEMBLY CABLE SEAL
molex
THIS DRAWING CONTAINS INFORMATION THAT IS PROPRIETARY TO MOLEX INCORPORATED AND SHOULD NOT BE USED WITHOUT WRITTEN PERMISSION

PL-1x4x6_CLIP_A2.P
Rev: 5 2012/07/11

1x4 BLADE SEALED ASSEMBLY BOM
FOR WIRE DRESS COVER INTERFACE 2
REFER WIRE DRESS INTERFACE SHEET
FOR DETAILS

ASSEMBLY DESCRIPTION	ASSEMBLY PART NUMBER																																			PRODUCTION TOOL STATUS	COMMENTS
KEYING OPTION A, 400 CLIP SLOT, BLACK	34899-2060																																			AS TOOLED BUT NOT VALIDATED	
KEYING OPTION A, 400 CLIP SLOT, YELLOW	34899-2050																																		A	TOOLED BUT NOT VALIDATED	
KEYING OPTION D, 7mm CLIP SLOT, LIGHT GRAY	34899-2085																						D													SALEABLE	
KEYING OPTION F, 7mm CLIP SLOT, BLACK	34899-2095																					F														SALEABLE	
KEYING OPTION E, 7mm CLIP SLOT, DARK GRAY	34899-2085																				E															SALEABLE	
KEYING OPTION D, 7mm CLIP SLOT, LIGHT GRAY	34899-2085																			D																SALEABLE	
KEYING OPTION B, 7mm CLIP SLOT, BLACK	34899-2065																		A																	SALEABLE	
KEYING OPTION B, 7mm CLIP SLOT, STONE GRAY	34899-2065																	B																		SALEABLE	
KEYING OPTION A, 7mm CLIP SLOT, BLACK	34899-2060																A																			SALEABLE	
KEYING OPTION B, 7mm CLIP SLOT, YELLOW	34899-2075															B																				SALEABLE	
KEYING OPTION F, 7mm CLIP SLOT, YELLOW	34899-2075														F																					SALEABLE	
KEYING OPTION E, 7mm CLIP SLOT, YELLOW	34899-2075												E																							SALEABLE	
KEYING OPTION D, 7mm CLIP SLOT, YELLOW	34899-2075										D																									SALEABLE	
KEYING OPTION C, 7mm CLIP SLOT, YELLOW	34899-2075								C																											SALEABLE	
KEYING OPTION B, 7mm CLIP SLOT, YELLOW	34899-2075							B																												SALEABLE	
KEYING OPTION A, 7mm CLIP SLOT, YELLOW	34899-2070	A																																		SALEABLE	

PLR		
1x4 CONNECTOR HOUSING, KEYING OPTION A, 400 CLIP SLOT	NATURAL	SPS/NYLON (GF20)
1x4 CONNECTOR HOUSING, KEYING OPTION A, 400 CLIP SLOT	BLACK	SPS/NYLON (GF20)
1x4 CONNECTOR HOUSING, KEYING OPTION A, 400 CLIP SLOT	YELLOW	SPS/NYLON (GF20)
1x4 CONNECTOR HOUSING, KEYING OPTION D, 7mm CLIP SLOT	LIGHT GRAY	SPS/NYLON (GF20)
1x4 CONNECTOR HOUSING, KEYING OPTION F, 7mm CLIP SLOT	BLACK	SPS/NYLON (GF20)
1x4 CONNECTOR HOUSING, KEYING OPTION E, 7mm CLIP SLOT	DARK GRAY	SPS/NYLON (GF20)
1x4 CONNECTOR HOUSING, KEYING OPTION D, 7mm CLIP SLOT	LIGHT GRAY	SPS/NYLON (GF20)
1x4 CONNECTOR HOUSING, KEYING OPTION B, 7mm CLIP SLOT	DARK GRAY	SPS/NYLON (GF20)
1x4 CONNECTOR HOUSING, KEYING OPTION B, 7mm CLIP SLOT	STONE GRAY	SPS/NYLON (GF20)
1x4 CONNECTOR HOUSING, KEYING OPTION A, 7mm CLIP SLOT	BLACK	SPS/NYLON (GF20)
1x4 CONNECTOR HOUSING, KEYING OPTION B, 7mm CLIP SLOT	YELLOW	SPS/NYLON (GF20)
1x4 CONNECTOR HOUSING, KEYING OPTION F, 7mm CLIP SLOT	YELLOW	SPS/NYLON (GF20)
1x4 CONNECTOR HOUSING, KEYING OPTION E, 7mm CLIP SLOT	YELLOW	SPS/NYLON (GF20)
1x4 CONNECTOR HOUSING, KEYING OPTION D, 7mm CLIP SLOT	YELLOW	SPS/NYLON (GF20)
1x4 CONNECTOR HOUSING, KEYING OPTION C, 7mm CLIP SLOT	YELLOW	SPS/NYLON (GF20)
1x4 CONNECTOR HOUSING, KEYING OPTION B, 7mm CLIP SLOT	YELLOW	SPS/NYLON (GF20)
1x4 CONNECTOR HOUSING, KEYING OPTION A, 7mm CLIP SLOT	YELLOW	SPS/NYLON (GF20)
DESCRIPTION	COLOR	MATERIAL

BOM/APPLICABLE COMPONENTS TABLE

LEGEND TABLE	
ABREVIATION	COMPONENT
A	CONNECTOR HOUSING KEYING OPTION A
B	CONNECTOR HOUSING KEYING OPTION B
C	CONNECTOR HOUSING KEYING OPTION C
D	CONNECTOR HOUSING KEYING OPTION D
E	CONNECTOR HOUSING KEYING OPTION E
F	CONNECTOR HOUSING KEYING OPTION F
G	CONNECTOR HOUSING KEYING OPTION G
PLR	PLR

ENTER DESCRIPTION
DO NOT SCALE DRAWING
UNCONTROLLED
PRINT DATE: 2016/06/07
PRINTED BY: 2016/06/07
SHEET 9 OF 11

QUALITY SYMBOLS
1 PLACE ±0.0
2 PLACES ±0.00
3 PLACES ±0.000
4 PLACES ±0.0000
5 PLACE ±0.00000

GENERAL TOLERANCES (UNLESS SPECIFIED)
MM INCH
± ---- ± ----
± ---- ± ----
± ---- ± ----
± ---- ± ----
± ---- ± ----
ANGULAR ± 3 °

DRAFT WHERE APPLICABLE HOLD REMAIN WITHIN DIMENSIONS

DIMENSION STYLE: MM ONLY
DRAWN BY: RAGUILAR80 DATE: 2012/07/19
CHECKED BY: DATE: 2012/07/19
MKZGHT 2012/07/19
APPROVED BY: DATE: MKZGHT 2012/07/24
MATERIAL NO.: SEE BOM
DOCUMENT NO.: SD-34899-6001
SHEET NO.: 9 OF 11

SCALE: 1
DESIGN UNITS: METRIC
THIRD ANGLE PROJECTION

TITLE: 1.2MM 1X4, 1X6 BLADE SEALED ASSEMBLY CABLE SEAL

molex

THIS DRAWING CONTAINS INFORMATION THAT IS PROPRIETARY TO MOLEX INCORPORATED AND SHOULD NOT BE USED WITHOUT WRITTEN PERMISSION

PL-1MM-CLP_MR-7
Rev. 5 2012/07/11

1x6 BLADE SEALED ASSEMBLY BOM
FOR WIRE DRESS COVER INTERFACE 1
REFER WIRE DRESS INTERFACE SHEET
FOR DETAILS

ASSEMBLY DESCRIPTION	ASSEMBLY PART NUMBER																		PRODUCTION TOOL STATUS	COMMENTS
KEYING OPTION A, 400 CLIP SLOT, BLACK	34899-6070																	A1	CONCEPT	
KEYING OPTION A, 400 CLIP SLOT, YELLOW	34899-6050																A		CONCEPT	
KEYING OPTION D, 7mm CLIP SLOT, STONE GRAY	34899-6063															D			SALEABLE	
KEYING OPTION C, 7mm CLIP SLOT, DARK GRAY	34899-6062														C				SALEABLE	
KEYING OPTION B, 7mm CLIP SLOT, LIGHT GRAY	34899-6061													B					SALEABLE	
KEYING OPTION A, 7mm CLIP SLOT, BLACK	34899-6060												A						SALEABLE	
KEYING OPTION D, 7mm CLIP SLOT, YELLOW	34899-6053											D							SALEABLE	
KEYING OPTION C, 7mm CLIP SLOT, YELLOW	34899-6052									C									SALEABLE	
KEYING OPTION B, 7mm CLIP SLOT, YELLOW	34899-6051								B										SALEABLE	
KEYING OPTION A, 7mm CLIP SLOT, YELLOW	34899-6043							A											SALEABLE	
KEYING OPTION D, 7mm CLIP SLOT, STONE GRAY	34899-6023						D												SALEABLE	
KEYING OPTION C, 7mm CLIP SLOT, DARK GRAY	34899-6022					C													SALEABLE	
KEYING OPTION B, 7mm CLIP SLOT, LIGHT GRAY	34899-6021				B														SALEABLE	
KEYING OPTION A, 7mm CLIP SLOT, BLACK	34899-6020			A															SALEABLE	
KEYING OPTION D, 7mm CLIP SLOT, YELLOW	34899-6013		D																SALEABLE	
KEYING OPTION C, 7mm CLIP SLOT, YELLOW	34899-6012	C																	SALEABLE	
KEYING OPTION B, 7mm CLIP SLOT, YELLOW	34899-6011	B																	SALEABLE	
KEYING OPTION A, 7mm CLIP SLOT, YELLOW	34899-6010	A																	SALEABLE	

PLR		
	NATURAL	SPS/NYLON GF20
1x6 CONNECTOR HOUSING, KEYING OPTION A 400 CLIP SLOT	BLACK	SPS/NYLON GF20
1x6 CONNECTOR HOUSING, KEYING OPTION A 400 CLIP SLOT	YELLOW	SPS/NYLON GF20
1x6 CONNECTOR HOUSING, KEYING OPTION D 7mm CLIP SLOT	STONE GRAY	SPS/NYLON GF20
1x6 CONNECTOR HOUSING, KEYING OPTION C 7mm CLIP SLOT	DARK GRAY	SPS/NYLON GF20
1x6 CONNECTOR HOUSING, KEYING OPTION B 7mm CLIP SLOT	LIGHT GRAY	SPS/NYLON GF20
1x6 CONNECTOR HOUSING, KEYING OPTION A 7mm CLIP SLOT	BLACK	SPS/NYLON GF20
1x6 CONNECTOR HOUSING, KEYING OPTION D 7mm CLIP SLOT	YELLOW	SPS/NYLON GF20
1x6 CONNECTOR HOUSING, KEYING OPTION C 7mm CLIP SLOT	YELLOW	SPS/NYLON GF20
1x6 CONNECTOR HOUSING, KEYING OPTION B 7mm CLIP SLOT	YELLOW	SPS/NYLON GF20
1x6 CONNECTOR HOUSING, KEYING OPTION A 7mm CLIP SLOT	YELLOW	SPS/NYLON GF20
1x6 CONNECTOR HOUSING, KEYING OPTION D 7mm CLIP SLOT	STONE GRAY	SPS/NYLON GF20
1x6 CONNECTOR HOUSING, KEYING OPTION C 7mm CLIP SLOT	DARK GRAY	SPS/NYLON GF20
1x6 CONNECTOR HOUSING, KEYING OPTION B 7mm CLIP SLOT	LIGHT GRAY	SPS/NYLON GF20
1x6 CONNECTOR HOUSING, KEYING OPTION A 7mm CLIP SLOT	BLACK	SPS/NYLON GF20
1x6 CONNECTOR HOUSING, KEYING OPTION D 7mm CLIP SLOT	YELLOW	SPS/NYLON GF20
1x6 CONNECTOR HOUSING, KEYING OPTION C 7mm CLIP SLOT	YELLOW	SPS/NYLON GF20
1x6 CONNECTOR HOUSING, KEYING OPTION B 7mm CLIP SLOT	YELLOW	SPS/NYLON GF20
1x6 CONNECTOR HOUSING, KEYING OPTION A 7mm CLIP SLOT	YELLOW	SPS/NYLON GF20
DESCRIPTION	COLOR	MATERIAL
BOM/APPLICABLE COMPONENTS TABLE		

LEGEND TABLE	
ABREVIATION	COMPONENT
A	CONNECTOR HOUSING KEYING OPTION A
B	CONNECTOR HOUSING KEYING OPTION B
C	CONNECTOR HOUSING KEYING OPTION C
D	CONNECTOR HOUSING KEYING OPTION D
PLR	PLR

ENTER DESCRIPTION
DRAWN BY: TONJONJALIST 7/16/2015
CHECKED BY: 7/16/2015
APPROVED BY: 7/16/2015
SIZE: D1

QUALITY SYMBOLS: 3 PLACES ±0.10; 2 PLACES ±0.50; 1 PLACE ±0.00; 0 PLACE ±0.00

GENERAL TOLERANCES (UNLESS SPECIFIED): ANGULAR ±1.5°; DRAFT WHERE APPLICABLE MUST REMAIN WITHIN DIMENSIONS

	MM	INCH
±.X	±.---	±.---
±.XX	±.---	±.---
±.XXX	±.---	±.---
±.XXXX	±.---	±.---
±.XXXXX	±.---	±.---

DIMENSION STYLE: MM ONLY
SCALE: 2:1
DESIGN UNITS: METRIC
THIRD ANGLE PROJECTION

DRAWN BY: TONJONJALIST 2012/07/19
CHECKED BY: 2012/07/19
MKZGHT
APPROVED BY: 2012/07/24
MKZGHT

TITLE: 12MM 1X4, 1X6 BLADE SEALED ASSEMBLY CABLE SEAL

molex

MATERIAL NO.: SEE BOM
DOCUMENT NO.: SD-34899-6001
SHEET NO.: 10 OF 11

THIS DRAWING CONTAINS INFORMATION THAT IS PROPRIETARY TO MOLEX INCORPORATED AND SHOULD NOT BE USED WITHOUT WRITTEN PERMISSION

PL-1166-D_P_A6_7
Rev. 5 2012/07/11

1x6 BLADE SEALED ASSEMBLY BOM
FOR WIRE DRESS COVER INTERFACE 2
REFER WIRE DRESS INTERFACE SHEET
FOR DETAILS

ASSEMBLY DESCRIPTION	ASSEMBLY PART NUMBER																	PRODUCTION TOOL STATUS	COMMENTS
KEYING OPTION D, 1mm CLIP SLOT, STONE GRAY	34899-6093																D	SALEABLE	
KEYING OPTION C, 1mm CLIP SLOT, DARK GRAY	34899-6092															C		SALEABLE	
KEYING OPTION B, 1mm CLIP SLOT, LIGHT GRAY	34899-6091														B			SALEABLE	
KEYING OPTION A, 1mm CLIP SLOT, BLACK	34899-6090													A				SALEABLE	
KEYING OPTION D, 1mm CLIP SLOT, YELLOW	34899-6083												D					SALEABLE	
KEYING OPTION C, 1mm CLIP SLOT, YELLOW	34899-6082											C						SALEABLE	
KEYING OPTION B, 1mm CLIP SLOT, YELLOW	34899-6081									B								SALEABLE	
KEYING OPTION A, 1mm CLIP SLOT, YELLOW	34899-6080								A									SALEABLE	
KEYING OPTION D, 1mm CLIP SLOT, STONE GRAY	34899-6093							D										SALEABLE	
KEYING OPTION C, 1mm CLIP SLOT, DARK GRAY	34899-6092						C											SALEABLE	
KEYING OPTION B, 1mm CLIP SLOT, LIGHT GRAY	34899-6091					B												SALEABLE	
KEYING OPTION A, 1mm CLIP SLOT, BLACK	34899-6090				A													SALEABLE	
KEYING OPTION D, 1mm CLIP SLOT, YELLOW	34899-6083			D														SALEABLE	
KEYING OPTION C, 1mm CLIP SLOT, YELLOW	34899-6082		C															SALEABLE	
KEYING OPTION B, 1mm CLIP SLOT, YELLOW	34899-6081	B																SALEABLE	
KEYING OPTION A, 1mm CLIP SLOT, YELLOW	34899-6080	A																SALEABLE	

DESCRIPTION	COLOR	MATERIAL
PLR	NATURAL	SPS/NYLON GF20
1x6 CONNECTOR HOUSING, KEYING OPTION D 1mm CLIP SLOT	STONE GRAY	SPS/NYLON GF20
1x6 CONNECTOR HOUSING, KEYING OPTION C 1mm CLIP SLOT	DARK GRAY	SPS/NYLON GF20
1x6 CONNECTOR HOUSING, KEYING OPTION B 1mm CLIP SLOT	LIGHT GRAY	SPS/NYLON GF20
1x6 CONNECTOR HOUSING, KEYING OPTION A 1mm CLIP SLOT	BLACK	SPS/NYLON GF20
1x6 CONNECTOR HOUSING, KEYING OPTION D 1mm CLIP SLOT	YELLOW	SPS/NYLON GF20
1x6 CONNECTOR HOUSING, KEYING OPTION C 1mm CLIP SLOT	YELLOW	SPS/NYLON GF20
1x6 CONNECTOR HOUSING, KEYING OPTION B 1mm CLIP SLOT	YELLOW	SPS/NYLON GF20
1x6 CONNECTOR HOUSING, KEYING OPTION A 1mm CLIP SLOT	YELLOW	SPS/NYLON GF20
1x6 CONNECTOR HOUSING, KEYING OPTION D 1mm CLIP SLOT	STONE GRAY	SPS/NYLON GF20
1x6 CONNECTOR HOUSING, KEYING OPTION C 1mm CLIP SLOT	DARK GRAY	SPS/NYLON GF20
1x6 CONNECTOR HOUSING, KEYING OPTION B 1mm CLIP SLOT	LIGHT GRAY	SPS/NYLON GF20
1x6 CONNECTOR HOUSING, KEYING OPTION A 1mm CLIP SLOT	BLACK	SPS/NYLON GF20
1x6 CONNECTOR HOUSING, KEYING OPTION D 1mm CLIP SLOT	YELLOW	SPS/NYLON GF20
1x6 CONNECTOR HOUSING, KEYING OPTION C 1mm CLIP SLOT	YELLOW	SPS/NYLON GF20
1x6 CONNECTOR HOUSING, KEYING OPTION B 1mm CLIP SLOT	YELLOW	SPS/NYLON GF20
1x6 CONNECTOR HOUSING, KEYING OPTION A 1mm CLIP SLOT	YELLOW	SPS/NYLON GF20

BOM/APPLICABLE COMPONENTS TABLE

LEGEND TABLE	
ABREVIATION	COMPONENT
A	CONNECTOR HOUSING KEYING OPTION A
B	CONNECTOR HOUSING KEYING OPTION B
C	CONNECTOR HOUSING KEYING OPTION C
D	CONNECTOR HOUSING KEYING OPTION D
PLR	PLR

ENTER DESCRIPTION
DO NOT SCALE DRAWING
DTS
DRAWN 2012/07/19
CHECKED
ENGINEERING
PROJECT MANAGER
QUALITY
PROCUREMENT

QUALITY SYMBOLS

GENERAL TOLERANCES (UNLESS SPECIFIED)

	MM	INCH
2 PLACES	±0.25	±.010
3 PLACES	±0.10	±.004
4 PLACES	±0.05	±.002
5 PLACES	±0.03	±.001
6 PLACES	±0.025	±.0005
3 PLACE	±0.005	±.0002

ANGULAR: ± ?°

DRAFT WHERE APPLICABLE MUST REMAIN WITHIN DIMENSIONS

DIMENSION STYLE: MM ONLY
SCALE
DESIGN UNITS: METRIC
THIRD ANGLE PROJECTION

DRAWN BY: ANGULAMBROU 2012/07/19
CHECKED BY: DATE
MKZGHT 2012/07/19
APPROVED BY: DATE
MKZGHT 2012/07/24

TITLE
12MM 1X4, 1X6 BLADE SEALED ASSEMBLY CABLE SEAL

molex

MATERIAL NO.: SEE BOM
DOCUMENT NO.: SD-34899-6001
SHEET NO.: 11 OF 11

THIS DRAWING CONTAINS INFORMATION THAT IS PROPRIETARY TO MOLEX INCORPORATED AND SHOULD NOT BE USED WITHOUT WRITTEN PERMISSION

X-ON Electronics

Largest Supplier of Electrical and Electronic Components

Click to view similar products for Automotive Connectors ***category:***

Click to view products by Molex ***manufacturer:***

Other Similar products are found below :

003-018-000 600858 60403001 60993906-B 60993913-B 629515004020001 M902-2131 M902-2161 M902-2344 72.330.1035.1 73.353.4028.0 F118010 F119300-B F132210 F132210-B F166900 F180100 F258300 F258300-B F294300-B F339100 F339700 F358300-B F374110 F407400 F412210 F427600 F444110 F487000 F495100-B F500900-B F509500B-B 770444-1 776880-1 827153-1 881735-1 8N1515-32-24P 9-1326727-8 9-1326729-8 925467-1 925474-1 928905-1 936398-2 964562-1 964562-4 964731-2 965051-1 968782-1 GT17SA-8DS-HU GT17VS-10DP-5.2CF