Freescale Semiconductor
Data Sheet

Document Number: MSC7116
Rev. 13, 4/2008

MSC7116

Low-Cost 16-bit DSP with DDR Controller and 10/100 Mbps Ethernet MAC

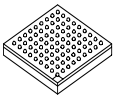

MAP-BGA–400
17 mm × 17 mm

- StarCore® SC1400 DSP extended core with one SC1400 DSP core, 192 Kbyte of internal SRAM M1 memory, 16 way 16 Kbyte instruction cache (ICache), four-entry write buffer, programmable interrupt controller (PIC), and low-power Wait and Stop processing modes.
- 192 Kbyte M2 memory for critical data and temporary data buffering.
- 8 Kbyte boot ROM.
- AHB-Lite crossbar switch that allows parallel data transfers between four master ports and six slave ports, where each port connects to an AHB-Lite bus; fixed or round robin priority programmable at each slave port; programmable bus parking at each slave port; low power mode.
- Internal PLL generates up to 266 MHz clock for the SC1400 core and up to 133 MHz for the crossbar switch, DMA channels, M2 memory, and other peripherals.
- Clock synthesis module provides predivision of PLL input clock; independent clocking of the internal timers and DDR module; programmable operation in the SC1400 low power Stop mode; independent shutdown of different regions of the device.
- Enhanced 16-bit wide host interface (HDI16) provides a glueless connection to industry-standard microcomputers, microprocessors, and DSPs and can also operate with an 8-bit host data bus, making if fully compatible with the DSP56300 HI08 from the external host side.
- DDR memory controller that supports byte enables for up to a 32-bit data bus; glueless interface to 133 MHz 14-bit page mode DDR-RAM; 14-bit external address bus supporting up to 1 Gbyte; and 16-bit or 32-bit external data bus.
- Programmable memory interface with independent read buffers, programmable predictive read feature for each buffer, and a write buffer.
- System control unit performs software watchdog timer function; includes programmable bus time-out monitors on AHB-Lite slave buses; includes bus error detection and programmable time-out monitors on AHB-Lite master buses; and has address out-of-range detection on each crossbar switch buses.
- Event port collects and counts important signal events including DMA and interrupt requests and trigger events such as interrupts, breakpoints, DMA transfers, or wake-up events; units operate independently, in sequence, or triggered externally; can be used standalone or with the OCE10.
- Multi-channel DMA controller with 32 time-multiplexed unidirectional channels, priority-based time-multiplexing between channels using 32 internal priority levels, fixed- or round-robin-priority operation, major-minor loop structure, and $\overline{\text{DONE}}$ or $\overline{\text{DRACK}}$ protocol from requesting units.
- Two independent TDM modules with independent receive and transmit, programmable sharing of frame sync and clock, programmable word size (8 or 16-bit), hardware-base A-law/µ-law conversion, up to 50 Mbps data rate per TDM, up to 128 channels, with glueless interface to E1/T1 frames and MVIP, SCAS, and H.110 buses.
- Ethernet controller with support for 10/100 Mbps MII/RMII designed to comply with IEEE Std. 802.3™, 802.3u™, 802.3x™, and 802.3ac™; with internal receive and transmit FIFOs and a FIFO controller; direct access to internal memories via its own DMA controller; full and half duplex operation; programmable maximum frame length; virtual local area network (VLAN) tag and priority support; retransmission of transmit FIFO following collision; CRC generation and verification for inbound and outbound packets; and address recognition including promiscuous, broadcast, individual address. hash/exact match, and multicast hash match.
- UART with full-duplex operation up to 5.0 Mbps.
- Up to 41 general-purpose input/output (GPIO) ports.
- I^2C interface that allows booting from EEPROM devices up to 1 Mbyte.
- Two quad timer modules, each with sixteen configurable 16-bit timers.
- fieldBIST™ unit detects and provides visibility into unlikely field failures for systems with high availability to ensure structural integrity, that the device operates at the rated speed, is free from reliability defects, and reports diagnostics for partial or complete device inoperability.
- Standard JTAG interface allows easy integration to system firmware and internal on-chip emulation (OCE10) module.
- Optional booting external host via 8-bit or 16-bit access through the HDI16, I^2C, or SPI using in the boot ROM to access serial SPI Flash/EEPROM devices; different clocking options during boot with the PLL on or off using a variety of input frequency ranges.

Because of an order from the United States International Trade Commission, BGA-packaged product lines and part numbers indicated here currently are not available from Freescale for import or sale in the United States prior to September 2010: MSC7116VF1000, MSC7116VM1000, MSC711XADS

© Freescale Semiconductor, Inc., 2004, 2008. All rights reserved.

Table of Contents

1 Pin Assignments 4
  1.1 MAP-BGA Ball Layout Diagrams 4
  1.2 Signal List By Ball Location 6
2 Electrical Characteristics 17
  2.1 Maximum Ratings 17
  2.2 Recommended Operating Conditions 18
  2.3 Thermal Characteristics 19
  2.4 DC Electrical Characteristics 19
  2.5 AC Timings 21
3 Hardware Design Considerations 41
  3.1 Thermal Design Considerations 41
  3.2 Power Supply Design Considerations 42
  3.3 Estimated Power Usage Calculations 49
  3.4 Reset and Boot 51
  3.5 DDR Memory System Guidelines 54
4 Ordering Information 57
5 Package Information 58
6 Product Documentation 58
7 Revision History 59

List of Figures

Figure 1. MSC7116 Block Diagram 3
Figure 2. MSC7116 Molded Array Process-Ball Grid Array (MAP-BGA), Top View 4
Figure 3. MSC7116 Molded Array Process-Ball Grid Array (MAP-BGA), Bottom View 5
Figure 4. Timing Diagram for a Reset Configuration Write 25
Figure 5. DDR DRAM Input Timing Diagram 26
Figure 6. DDR DRAM Output Timing Diagram 27
Figure 7. DDR DRAM AC Test Load 28
Figure 8. TDM Receive Signals 28
Figure 9. TDM Transmit Signals 29
Figure 10. Ethernet Receive Signal Timing 29
Figure 11. Ethernet Receive Signal Timing 30
Figure 12. Asynchronous Input Signal Timing 30
Figure 13. Serial Management Channel Timing 31
Figure 14. Read Timing Diagram, Single Data Strobe 33
Figure 15. Read Timing Diagram, Double Data Strobe 33
Figure 16. Write Timing Diagram, Single Data Strobe 34
Figure 17. Write Timing Diagram, Double Data Strobe 34
Figure 18. Host DMA Read Timing Diagram, HPCR[OAD] = 0 . . 35
Figure 19. Host DMA Write Timing Diagram, HPCR[OAD] = 0 . . 35
Figure 20. I2C Timing Diagram 36
Figure 21. UART Input Timing 37
Figure 22. UART Output Timing 37
Figure 23. EE Pin Timing 37
Figure 24. EVNT Pin Timing 38
Figure 25. GPI/GPO Pin Timing 38
Figure 26. Test Clock Input Timing Diagram 39
Figure 27. Boundary Scan (JTAG) Timing Diagram 40
Figure 28. Test Access Port Timing Diagram 40
Figure 29. TRST Timing Diagram 40
Figure 30. Voltage Sequencing Case 1 43
Figure 31. Voltage Sequencing Case 2 44
Figure 32. Voltage Sequencing Case 3 45
Figure 33. Voltage Sequencing Case 4 46
Figure 34. Voltage Sequencing Case 5 47
Figure 35. PLL Power Supply Filter Circuits 48
Figure 36. SSTL Termination Techniques 54
Figure 37. SSTL Power Value 55

Because of an order from the United States International Trade Commission, BGA-packaged product lines and part numbers indicated here currently are not available from Freescale for import or sale in the United States prior to September 2010: MSC7116VF1000, MSC7116VM1000, MSC711XADS

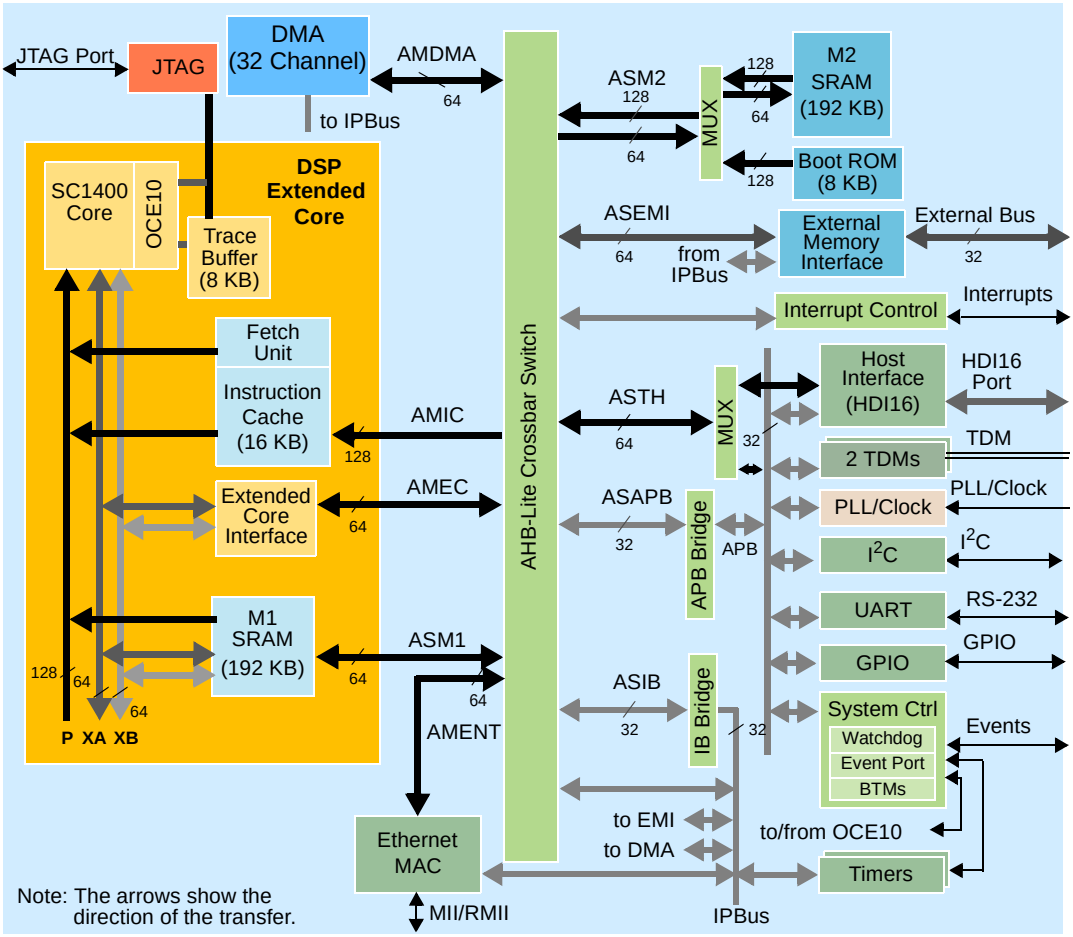

Figure 1. MSC7116 Block Diagram

Because of an order from the United States International Trade Commission, BGA-packaged product lines and part numbers indicated here currently are not available from Freescale for import or sale in the United States prior to September 2010: MSC7116VF1000, MSC7116VM1000, MSC711XADS

1 Pin Assignments

This section includes diagrams of the MSC7116 package ball grid array layouts and pinout allocation tables.

1.1 MAP-BGA Ball Layout Diagrams

Top and bottom views of the MAP-BGA package are shown in **Figure 2** and **Figure 3** with their ball location index numbers.

Top View

	1	2	3	4	5	6	7	8	9	10	11	12	13	14	15	16	17	18	19	20
A	GND	GND	DQM1	DQS2	CK	$\overline{CK}$	HD15	HD12	HD10	HD7	HD6	HD4	HD1	HD0	GND	BM3	NC	NC	NC	NC
B	V_{DDM}	NC	$\overline{CS0}$	DQM2	DQS3	DQS0	CKE	$\overline{WE}$	HD14	HD11	HD8	HD5	HD2	NC	BM2	NC	NC	NC	NC	NC
C	D24	D30	D25	$\overline{CS1}$	DQM3	DQM0	DQS1	$\overline{RAS}$	$\overline{CAS}$	HD13	HD9	HD3	NC	NC	NC	NC	NC	NC	NC	NC
D	V_{DDM}	D28	D27	GND	V_{DDM}	V_{DDM}	V_{DDM}	V_{DDM}	V_{DDM}	V_{DDM}	V_{DDIO}	V_{DDIO}	V_{DDIO}	V_{DDIO}	V_{DDIO}	V_{DDIO}	V_{DDC}	NC	NC	NC
E	GND	D26	D31	V_{DDM}	V_{DDM}	V_{DDC}	V_{DDC}	V_{DDC}	V_{DDC}	V_{DDM}	V_{DDIO}	V_{DDIO}	V_{DDIO}	V_{DDIO}	V_{DDIO}	V_{DDC}	V_{DDC}	NC	NC	NC
F	V_{DDM}	D15	D29	V_{DDC}	V_{DDC}	V_{DDC}	GND	GND	GND	V_{DDM}	V_{DDM}	GND	GND	GND	V_{DDIO}	V_{DDC}	V_{DDC}	NC	NC	NC
G	GND	D13	GND	V_{DDM}	V_{DDM}	GND	GND	GND	GND	GND	GND	GND	GND	GND	V_{DDIO}	V_{DDIO}	V_{DDC}	NC	NC	NC
H	D14	D12	D11	V_{DDM}	V_{DDM}	GND	GND	GND	GND	GND	GND	GND	GND	GND	V_{DDIO}	V_{DDIO}	V_{DDC}	NC	HA2	HA1
J	D10	V_{DDM}	D9	V_{DDM}	V_{DDM}	V_{DDM}	GND	GND	GND	GND	GND	GND	GND	GND	GND	V_{DDIO}	V_{DDC}	HA3	$\overline{HACK}$	$\overline{HREQ}$
K	D0	GND	D8	V_{DDC}	V_{DDM}	GND	GND	GND	GND	GND	GND	GND	GND	GND	V_{DDIO}	V_{DDIO}	V_{DDC}	HA0	HDDS	$\overline{HDS}$
L	D1	GND	D3	V_{DDC}	V_{DDM}	GND	GND	GND	GND	GND	GND	GND	GND	V_{DDIO}	V_{DDIO}	V_{DDIO}	V_{DDC}	$\overline{HCS2}$	$\overline{HCS1}$	HRW
M	D2	V_{DDM}	D5	V_{DDM}	V_{DDM}	GND	GND	GND	GND	GND	GND	GND	GND	GND	GND	V_{DDC}	V_{DDC}	SDA	UTXD	URXD
N	D4	D6	V_{REF}	V_{DDM}	V_{DDM}	V_{DDM}	GND	GND	GND	GND	GND	GND	GND	GND	V_{DDIO}	V_{DDC}	V_{DDC}	CLKIN	SCL	V_{SSPLL}
P	D7	D17	D16	V_{DDM}	V_{DDM}	V_{DDM}	GND	GND	GND	GND	GND	GND	GND	GND	V_{DDIO}	V_{DDIO}	V_{DDC}	$\overline{PORESET}$	TPSEL	V_{DDPLL}
R	GND	D19	D18	V_{DDM}	V_{DDM}	V_{DDM}	GND	V_{DDM}	GND	V_{DDM}	GND	GND	V_{DDIO}	GND	V_{DDIO}	V_{DDIO}	V_{DDC}	TDO	EE0	TEST0
T	V_{DDM}	D20	D22	V_{DDM}	V_{DDM}	V_{DDC}	V_{DDM}	V_{DDM}	V_{DDC}	V_{DDM}	V_{DDM}	V_{DDIO}	V_{DDIO}	V_{DDIO}	V_{DDIO}	V_{DDC}	V_{DDC}	MDIO	TMS	$\overline{HRESET}$
U	GND	D21	D23	V_{DDM}	V_{DDC}	V_{DDC}	V_{DDC}	V_{DDC}	V_{DDC}	V_{DDC}	V_{DDC}	V_{DDC}	V_{DDC}	V_{DDC}	V_{DDC}	V_{DDC}	V_{DDC}	COL	TCK	$\overline{TRST}$
V	V_{DDM}	NC	A13	A11	A10	A5	A2	BA0	NC	EVNT0	EVNT4	T0TCK	T1RFS	T1TD	TX_ER	RXD2	RXD0	TX_EN	CRS	TDI
W	GND	V_{DDM}	A12	A8	A7	A6	A3	NC	EVNT1	EVNT2	T0RFS	T0TFS	T1RD	T1TFS	TXD2	RXD3	TXD1	TXCLK	RX_ER	MDC
Y	V_{DDM}	GND	A9	A1	A0	A4	BA1	$\overline{NMI}$	EVNT3	T0RCK	T0RD	TOTD	T1RCK	T1TCK	TXD3	RXCLK	TXD0	RXD1	GND	RX_DV

Figure 2. MSC7116 Molded Array Process-Ball Grid Array (MAP-BGA), Top View

Because of an order from the United States International Trade Commission, BGA-packaged product lines and part numbers indicated here currently are not available from Freescale for import or sale in the United States prior to September 2010: MSC7116VF1000, MSC7116VM1000, MSC711XADS

Bottom View

	20	19	18	17	16	15	14	13	12	11	10	9	8	7	6	5	4	3	2	1
A	NC	NC	NC	NC	BM3	GND	HD0	HD1	HD4	HD6	HD7	HD10	HD12	HD15	$\overline{CK}$	CK	DQS2	DQM1	GND	GND
B	NC	NC	NC	NC	NC	BM2	NC	HD2	HD5	HD8	HD11	HD14	$\overline{WE}$	CKE	DQS0	DQS3	DQM2	$\overline{CS0}$	NC	V_{DDM}
C	NC	NC	NC	NC	NC	NC	NC	NC	HD3	HD9	HD13	$\overline{CAS}$	$\overline{RAS}$	DQS1	DQM0	DQM3	$\overline{CS1}$	D25	D30	D24
D	NC	NC	NC	V_{DD}	V_{DDIO}	V_{DDIO}	V_{DDIO}	V_{DDIO}	V_{DDIO}	V_{DDIO}	V_{DDM}	V_{DDM}	V_{DDM}	V_{DDM}	V_{DDM}	V_{DDM}	GND	D27	D28	V_{DDM}
E	NC	NC	NC	V_{DD}	V_{DD}	V_{DDIO}	V_{DDIO}	V_{DDIO}	V_{DDIO}	V_{DDIO}	V_{DDM}	V_{DD}	V_{DD}	V_{DD}	V_{DD}	V_{DDM}	V_{DDM}	D31	D26	GND
F	NC	NC	NC	V_{DD}	V_{DD}	V_{DDIO}	GND	GND	GND	V_{DDM}	V_{DDM}	GND	GND	GND	V_{DD}	V_{DD}	V_{DD}	D29	D15	V_{DDM}
G	NC	NC	NC	V_{DD}	V_{DDIO}	V_{DDIO}	GND	GND	GND	GND	GND	GND	GND	GND	GND	V_{DDM}	V_{DDM}	GND	D13	GND
H	HA1	HA2	NC	V_{DD}	V_{DDIO}	V_{DDIO}	GND	GND	GND	GND	GND	GND	GND	GND	GND	V_{DDM}	V_{DDM}	D11	D12	D14
J	$\overline{HREQ}$	$\overline{HACK}$	HA3	V_{DD}	V_{DDIO}	GND	GND	GND	GND	GND	GND	GND	GND	GND	V_{DDM}	V_{DDM}	V_{DDM}	D9	V_{DDM}	D10
K	$\overline{HDS}$	HDDS	HA0	V_{DD}	V_{DDIO}	V_{DDIO}	GND	GND	GND	GND	GND	GND	GND	GND	GND	V_{DDM}	V_{DD}	D8	GND	D0
L	HRW	$\overline{HCS1}$	$\overline{HCS2}$	V_{DD}	V_{DDIO}	V_{DDIO}	V_{DDIO}	GND	GND	GND	GND	GND	GND	GND	GND	V_{DDM}	V_{DD}	D3	GND	D1
M	URXD	UTXD	SDA	V_{DD}	V_{DD}	GND	GND	GND	GND	GND	GND	GND	GND	GND	GND	V_{DDM}	V_{DDM}	D5	V_{DDM}	D2
N	V_{SSPLL}	SCL	CLKIN	V_{DD}	V_{DD}	V_{DDIO}	GND	GND	GND	GND	GND	GND	GND	GND	V_{DDM}	V_{DDM}	V_{DDM}	V_{REF}	D6	D4
P	V_{DDPLL}	TPSEL	$\overline{PORESET}$	V_{DD}	V_{DDIO}	V_{DDIO}	GND	GND	GND	GND	GND	GND	GND	GND	V_{DDM}	V_{DDM}	V_{DDM}	D16	D17	D7
R	TEST0	EE0	TDO	V_{DD}	V_{DDIO}	V_{DDIO}	GND	V_{DDIO}	GND	GND	V_{DDM}	GND	V_{DDM}	GND	V_{DDM}	V_{DDM}	V_{DDM}	D18	D19	GND
T	$\overline{HRESET}$	TMS	MDIO	V_{DD}	V_{DD}	V_{DDIO}	V_{DDIO}	V_{DDIO}	V_{DDIO}	V_{DDM}	V_{DDM}	V_{DD}	V_{DDM}	V_{DDM}	V_{DD}	V_{DDM}	V_{DDM}	D22	D20	V_{DDM}
U	$\overline{TRST}$	TCK	COL	V_{DD}	V_{DD}	V_{DD}	V_{DD}	V_{DD}	V_{DD}	V_{DD}	V_{DD}	V_{DD}	V_{DD}	V_{DD}	V_{DD}	V_{DD}	V_{DDM}	D23	D21	GND
V	TDI	CRS	TX_EN	RXD0	RXD2	TX_ER	T1TD	T1RFS	T0TCK	EVNT4	EVNT0	NC	BA0	A2	A5	A10	A11	A13	NC	V_{DDM}
W	MDC	RX_ER	TXCLK	TXD1	RXD3	TXD2	T1TFS	T1RD	T0TFS	T0RFS	EVNT2	EVNT1	NC	A3	A6	A7	A8	A12	V_{DDM}	GND
Y	RX_DV	GND	RXD1	TXD0	RXCLK	TXD3	T1TCK	T1RCK	TOTD	T0RD	T0RCK	EVNT3	$\overline{NMI}$	BA1	A4	A0	A1	A9	GND	V_{DDM}

Figure 3. MSC7116 Molded Array Process-Ball Grid Array (MAP-BGA), Bottom View

Because of an order from the United States International Trade Commission, BGA-packaged product lines and part numbers indicated here currently are not available from Freescale for import or sale in the United States prior to September 2010: MSC7116VF1000, MSC7116VM1000, MSC711XADS

1.2 Signal List By Ball Location

Table 1 lists the signals sorted by ball number and configuration.

Table 1. MSC7116 Signals by Ball Designator

Number	Signal Names					
	End of Reset	Software Controlled			Hardware Controlled	
		GPI Enabled (Default)	Interrupt Enabled	GPO Enabled	Primary	Alternate
A1	GND					
A2	GND					
A3	DQM1					
A4	DQS2					
A5	CK					
A6	$\overline{CK}$					
A7	GPIC7			GPOC7	HD15	
A8	GPIC4			GPOC4	HD12	
A9	GPIC2			GPOC2	HD10	
A10	reserved				HD7	
A11	reserved				HD6	
A12	reserved				HD4	
A13	reserved				HD1	
A14	reserved				HD0	
A15	GND					
A16	BM3	GPID8		GPOD8	reserved	
A17	NC					
A18	NC					
A19	NC					
A20	NC					
B1	V_{DDM}					
B2	NC					
B3	$\overline{CS0}$					
B4	DQM2					
B5	DQS3					
B6	DQS0					
B7	CKE					
B8	$\overline{WE}$					
B9	GPIC6			GPOC6	HD14	
B10	GPIC3			GPOC3	HD11	
B11	GPIC0			GPOC0	HD8	
B12	reserved				HD5	
B13	reserved				HD2	

Because of an order from the United States International Trade Commission, BGA-packaged product lines and part numbers indicated here currently are not available from Freescale for import or sale in the United States prior to September 2010: MSC7116VF1000, MSC7116VM1000, MSC711XADS

Table 1. MSC7116 Signals by Ball Designator (continued)

Number	Signal Names					
	End of Reset	Software Controlled			Hardware Controlled	
		GPI Enabled (Default)	Interrupt Enabled	GPO Enabled	Primary	Alternate
B14	NC					
B15	BM2	GPID7		GPOD7	reserved	
B16	NC					
B17	NC					
B18	NC					
B19	NC					
B20	NC					
C1	D24					
C2	D30					
C3	D25					
C4	$\overline{CS1}$					
C5	DQM3					
C6	DQM0					
C7	DQS1					
C8	$\overline{RAS}$					
C9	$\overline{CAS}$					
C10	GPIC5			GPOC5	HD13	
C11	GPIC1			GPOC1	HD9	
C12	reserved				HD3	
C13	NC					
C14	NC					
C15	NC					
C16	NC					
C17	NC					
C18	NC					
C19	NC					
C20	NC					
D1	V_{DDM}					
D2	D28					
D3	D27					
D4	GND					
D5	V_{DDM}					
D6	V_{DDM}					
D7	V_{DDM}					
D8	V_{DDM}					
D9	V_{DDM}					

Because of an order from the United States International Trade Commission, BGA-packaged product lines and part numbers indicated here currently are not available from Freescale for import or sale in the United States prior to September 2010: MSC7116VF1000, MSC7116VM1000, MSC711XADS

Table 1. MSC7116 Signals by Ball Designator (continued)

Number	Signal Names					
	End of Reset	Software Controlled			Hardware Controlled	
		GPI Enabled (Default)	Interrupt Enabled	GPO Enabled	Primary	Alternate
D10	V_{DDM}					
D11	V_{DDIO}					
D12	V_{DDIO}					
D13	V_{DDIO}					
D14	V_{DDIO}					
D15	V_{DDIO}					
D16	V_{DDIO}					
D17	V_{DDC}					
D18	NC					
D19	NC					
D20	NC					
E1	GND					
E2	D26					
E3	D31					
E4	V_{DDM}					
E5	V_{DDM}					
E6	V_{DDC}					
E7	V_{DDC}					
E8	V_{DDC}					
E9	V_{DDC}					
E10	V_{DDM}					
E11	V_{DDIO}					
E12	V_{DDIO}					
E13	V_{DDIO}					
E14	V_{DDIO}					
E15	V_{DDIO}					
E16	V_{DDC}					
E17	V_{DDC}					
E18	NC					
E19	NC					
E20	NC					
F1	V_{DDM}					
F2	D15					
F3	D29					
F4	V_{DDC}					
F5	V_{DDC}					

Because of an order from the United States International Trade Commission, BGA-packaged product lines and part numbers indicated here currently are not available from Freescale for import or sale in the United States prior to September 2010: MSC7116VF1000, MSC7116VM1000, MSC711XADS

Table 1. MSC7116 Signals by Ball Designator (continued)

Number	Signal Names					
	End of Reset	Software Controlled			Hardware Controlled	
		GPI Enabled (Default)	Interrupt Enabled	GPO Enabled	Primary	Alternate
F6	V_{DDC}					
F7	GND					
F8	GND					
F9	GND					
F10	V_{DDM}					
F11	V_{DDM}					
F12	GND					
F13	GND					
F14	GND					
F15	V_{DDIO}					
F16	V_{DDC}					
F17	V_{DDC}					
F18	NC					
F19	NC					
F20	NC					
G1	GND					
G2	D13					
G3	GND					
G4	V_{DDM}					
G5	V_{DDM}					
G6	GND					
G7	GND					
G8	GND					
G9	GND					
G10	GND					
G11	GND					
G12	GND					
G13	GND					
G14	GND					
G15	V_{DDIO}					
G16	V_{DDIO}					
G17	V_{DDC}					
G18	NC					
G19	NC					
G20	NC					
H1	D14					

Because of an order from the United States International Trade Commission, BGA-packaged product lines and part numbers indicated here currently are not available from Freescale for import or sale in the United States prior to September 2010: MSC7116VF1000, MSC7116VM1000, MSC711XADS

Table 1. MSC7116 Signals by Ball Designator (continued)

Number	Signal Names					
	End of Reset	Software Controlled			Hardware Controlled	
		GPI Enabled (Default)	Interrupt Enabled	GPO Enabled	Primary	Alternate
H2	D12					
H3	D11					
H4	V_{DDM}					
H5	V_{DDM}					
H6	GND					
H7	GND					
H8	GND					
H9	GND					
H10	GND					
H11	GND					
H12	GND					
H13	GND					
H14	GND					
H15	V_{DDIO}					
H16	V_{DDIO}					
H17	V_{DDC}					
H18	NC					
H19	reserved				HA2	
H20	reserved				HA1	
J1	D10					
J2	V_{DDM}					
J3	D9					
J4	V_{DDM}					
J5	V_{DDM}					
J6	V_{DDM}					
J7	GND					
J8	GND					
J9	GND					
J10	GND					
J11	GND					
J12	GND					
J13	GND					
J14	GND					
J15	GND					
J16	V_{DDIO}					
J17	V_{DDC}					

Because of an order from the United States International Trade Commission, BGA-packaged product lines and part numbers indicated here currently are not available from Freescale for import or sale in the United States prior to September 2010: MSC7116VF1000, MSC7116VM1000, MSC711XADS

Table 1. MSC7116 Signals by Ball Designator (continued)

Number	Signal Names					
	End of Reset	Software Controlled			Hardware Controlled	
		GPI Enabled (Default)	Interrupt Enabled	GPO Enabled	Primary	Alternate
J18	GPIC11			GPOC11	HA3	
J19	reserved				$\overline{\text{HACK}}$/HACK or $\overline{\text{HRRQ}}$/HRRQ	
J20	HDSP	reserved			$\overline{\text{HREQ}}$/HREQ or $\overline{\text{HTRQ}}$/HTRQ	
K1	D0					
K2	GND					
K3	D8					
K4	V_{DDC}					
K5	V_{DDM}					
K6	GND					
K7	GND					
K8	GND					
K9	GND					
K10	GND					
K11	GND					
K12	GND					
K13	GND					
K14	GND					
K15	V_{DDIO}					
K16	V_{DDIO}					
K17	V_{DDC}					
K18	reserved				HA0	
K19	reserved				HDDS	
K20	reserved				$\overline{\text{HDS}}$/HDS or $\overline{\text{HWR}}$/HWR	
L1	D1					
L2	GND					
L3	D3					
L4	V_{DDC}					
L5	V_{DDM}					
L6	GND					
L7	GND					
L8	GND					
L9	GND					
L10	GND					
L11	GND					
L12	GND					
L13	GND					

Because of an order from the United States International Trade Commission, BGA-packaged product lines and part numbers indicated here currently are not available from Freescale for import or sale in the United States prior to September 2010: MSC7116VF1000, MSC7116VM1000, MSC711XADS

Table 1. MSC7116 Signals by Ball Designator (continued)

Number	Signal Names					
	End of Reset	Software Controlled			Hardware Controlled	
		GPI Enabled (Default)	Interrupt Enabled	GPO Enabled	Primary	Alternate
L14	V_{DDIO}					
L15	V_{DDIO}					
L16	V_{DDIO}					
L17	V_{DDC}					
L18	GPIB11			GPOB11	$\overline{HCS2}$/HCS2	
L19	reserved				$\overline{HCS1}$/HCS1	
L20	reserved				HRW or $\overline{HRD}$/HRD	
M1	D2					
M2	V_{DDM}					
M3	D5					
M4	V_{DDM}					
M5	V_{DDM}					
M6	GND					
M7	GND					
M8	GND					
M9	GND					
M10	GND					
M11	GND					
M12	GND					
M13	GND					
M14	GND					
M15	GND					
M16	V_{DDC}					
M17	V_{DDC}					
M18	GPIA14		$\overline{IRQ15}$	GPOA14	SDA	
M19	GPIA12		$\overline{IRQ3}$	GPOA12	UTXD	
M20	GPIA13		$\overline{IRQ2}$	GPOA13	URXD	
N1	D4					
N2	D6					
N3	V_{REF}					
N4	V_{DDM}					
N5	V_{DDM}					
N6	V_{DDM}					
N7	GND					
N8	GND					
N9	GND					

Because of an order from the United States International Trade Commission, BGA-packaged product lines and part numbers indicated here currently are not available from Freescale for import or sale in the United States prior to September 2010: MSC7116VF1000, MSC7116VM1000, MSC711XADS

Table 1. MSC7116 Signals by Ball Designator (continued)

Number	Signal Names					
	End of Reset	Software Controlled			Hardware Controlled	
		GPI Enabled (Default)	Interrupt Enabled	GPO Enabled	Primary	Alternate
N10	GND					
N11	GND					
N12	GND					
N13	GND					
N14	GND					
N15	V_{DDIO}					
N16	V_{DDC}					
N17	V_{DDC}					
N18	CLKIN					
N19	GPIA15		$\overline{IRQ14}$	GPOA15	SCL	
N20	V_{SSPLL}					
P1	D7					
P2	D17					
P3	D16					
P4	V_{DDM}					
P5	V_{DDM}					
P6	V_{DDM}					
P7	GND					
P8	GND					
P9	GND					
P10	GND					
P11	GND					
P12	GND					
P13	GND					
P14	GND					
P15	V_{DDIO}					
P16	V_{DDIO}					
P17	V_{DDC}					
P18	$\overline{PORESET}$					
P19	TPSEL					
P20	V_{DDPLL}					
R1	GND					
R2	D19					
R3	D18					
R4	V_{DDM}					
R5	V_{DDM}					

Because of an order from the United States International Trade Commission, BGA-packaged product lines and part numbers indicated here currently are not available from Freescale for import or sale in the United States prior to September 2010: MSC7116VF1000, MSC7116VM1000, MSC711XADS

Table 1. MSC7116 Signals by Ball Designator (continued)

Number	Signal Names					
	End of Reset	Software Controlled			Hardware Controlled	
		GPI Enabled (Default)	Interrupt Enabled	GPO Enabled	Primary	Alternate
R6	V_{DDM}					
R7	GND					
R8	V_{DDM}					
R9	GND					
R10	V_{DDM}					
R11	GND					
R12	GND					
R13	V_{DDIO}					
R14	GND					
R15	V_{DDIO}					
R16	V_{DDIO}					
R17	V_{DDC}					
R18	TDO					
R19	reserved				EE0/DBREQ	
R20	TEST0					
T1	V_{DDM}					
T2	D20					
T3	D22					
T4	V_{DDM}					
T5	V_{DDM}					
T6	V_{DDC}					
T7	V_{DDM}					
T8	V_{DDM}					
T9	V_{DDC}					
T10	V_{DDM}					
T11	V_{DDM}					
T12	V_{DDIO}					
T13	V_{DDIO}					
T14	V_{DDIO}					
T15	V_{DDIO}					
T16	V_{DDC}					
T17	V_{DDC}					
T18	reserved				MDIO	
T19	TMS					
T20	$\overline{\text{HRESET}}$					
U1	GND					

Because of an order from the United States International Trade Commission, BGA-packaged product lines and part numbers indicated here currently are not available from Freescale for import or sale in the United States prior to September 2010: MSC7116VF1000, MSC7116VM1000, MSC711XADS

Table 1. MSC7116 Signals by Ball Designator (continued)

Number	Signal Names					
	End of Reset	Software Controlled			Hardware Controlled	
		GPI Enabled (Default)	Interrupt Enabled	GPO Enabled	Primary	Alternate
U2	D21					
U3	D23					
U4	V_{DDM}					
U5	V_{DDC}					
U6	V_{DDC}					
U7	V_{DDC}					
U8	V_{DDC}					
U9	V_{DDC}					
U10	V_{DDC}					
U11	V_{DDC}					
U12	V_{DDC}					
U13	V_{DDC}					
U14	V_{DDC}					
U15	V_{DDC}					
U16	V_{DDC}					
U17	V_{DDC}					
U18	reserved				COL	
U19	TCK					
U20	$\overline{TRST}$					
V1	V_{DDM}					
V2	NC					
V3	A13					
V4	A11					
V5	A10					
V6	A5					
V7	A2					
V8	BA0					
V9	NC					
V10	reserved				EVNT0	
V11	SWTE	GPIA16	$\overline{IRQ12}$	GPOA16	EVNT4	
V12	GPIA8		$\overline{IRQ6}$	GPOA8	T0TCK	
V13	GPIA4		$\overline{IRQ1}$	GPOA4	T1RFS	
V14	GPIA0		$\overline{IRQ11}$	GPOA0	T1TD	
V15	GPIA28		$\overline{IRQ17}$	GPOA28	TX_ER	reserved
V16	GPID6			GPOD6	RXD2	reserved
V17	GPIA22		$\overline{IRQ22}$	GPOA22	RXD0	

Because of an order from the United States International Trade Commission, BGA-packaged product lines and part numbers indicated here currently are not available from Freescale for import or sale in the United States prior to September 2010: MSC7116VF1000, MSC7116VM1000, MSC711XADS

Table 1. MSC7116 Signals by Ball Designator (continued)

Number	Signal Names					
	End of Reset	Software Controlled			Hardware Controlled	
		GPI Enabled (Default)	Interrupt Enabled	GPO Enabled	Primary	Alternate
V18	GPIA24		$\overline{\text{IRQ24}}$	GPOA24	TX_EN	
V19	reserved				CRS	
V20	TDI					
W1	GND					
W2	V_{DDM}					
W3	A12					
W4	A8					
W5	A7					
W6	A6					
W7	A3					
W8	NC					
W9	GPIA17		$\overline{\text{IRQ13}}$	GPOA17	EVNT1	CLKO
W10	BM0	GPIC14		GPOC14	EVNT2	
W11	GPIA10		$\overline{\text{IRQ5}}$	GPOA10	T0RFS	
W12	GPIA7		$\overline{\text{IRQ7}}$	GPOA7	T0TFS	
W13	GPIA3		$\overline{\text{IRQ8}}$	GPOA3	T1RD	
W14	GPIA1		$\overline{\text{IRQ10}}$	GPOA1	T1TFS	
W15	GPID4			GPOD4	TXD2	reserved
W16	GPIA27		$\overline{\text{IRQ18}}$	GPOA27	RXD3	reserved
W17	GPIA19		$\overline{\text{IRQ19}}$	GPOA19	TXD1	
W18	GPIA23		$\overline{\text{IRQ23}}$	GPOA23	TXCLK or REFCLK	
W19	GPIA26		$\overline{\text{IRQ26}}$	GPOA26	RX_ER	
W20	H8BIT	reserved			MDC	
Y1	V_{DDM}					
Y2	GND					
Y3	A9					
Y4	A1					
Y5	A0					
Y6	A4					
Y7	BA1					
Y8	reserved		$\overline{\text{NMI}}$	reserved		
Y9	BM1	GPIC15		GPOC15	EVNT3	
Y10	GPIA11		$\overline{\text{IRQ4}}$	GPOA11	T0RCK	
Y11	GPIA9			GPOA9	T0RD	
Y12	GPIA6			GPOA6	T0TD	
Y13	GPIA5		$\overline{\text{IRQ0}}$	GPOA5	T1RCK	

Because of an order from the United States International Trade Commission, BGA-packaged product lines and part numbers indicated here currently are not available from Freescale for import or sale in the United States prior to September 2010: MSC7116VF1000, MSC7116VM1000, MSC711XADS

Table 1. MSC7116 Signals by Ball Designator (continued)

Number	Signal Names					
	End of Reset	Software Controlled			Hardware Controlled	
		GPI Enabled (Default)	Interrupt Enabled	GPO Enabled	Primary	Alternate
Y14	GPIA2		$\overline{\text{IRQ9}}$	GPOA2	T1TCK	
Y15	GPIA29		$\overline{\text{IRQ16}}$	GPOA29	TXD3	reserved
Y16	GPID5			GPOD5	RXCLK	reserved
Y17	GPIA20		$\overline{\text{IRQ20}}$	GPOA20	TXD0	
Y18	GPIA21		$\overline{\text{IRQ21}}$	GPOA21	RXD1	
Y19	GND					
Y20	GPIA25		$\overline{\text{IRQ25}}$	GPOA25	RX_DV or CRS_DV	

2 Electrical Characteristics

This document contains detailed information on power considerations, DC/AC electrical characteristics, and AC timing specifications. For additional information, see the *MSC711x Reference Manual*.

2.1 Maximum Ratings

CAUTION

This device contains circuitry protecting against damage due to high static voltage or electrical fields; however, normal precautions should be taken to avoid exceeding maximum voltage ratings. Reliability is enhanced if unused inputs are tied to an appropriate logic voltage level (for example, either GND or V_{DD}).

In calculating timing requirements, adding a maximum value of one specification to a minimum value of another specification does not yield a reasonable sum. A maximum specification is calculated using a worst case variation of process parameter values in one direction. The minimum specification is calculated using the worst case for the same parameters in the opposite direction. Therefore, a “maximum” value for a specification never occurs in the same device with a “minimum” value for another specification; adding a maximum to a minimum represents a condition that can never exist.

Because of an order from the United States International Trade Commission, BGA-packaged product lines and part numbers indicated here currently are not available from Freescale for import or sale in the United States prior to September 2010: MSC7116VF1000, MSC7116VM1000, MSC711XADS

Table 2 describes the maximum electrical ratings for the MSC7116.

Table 2. Absolute Maximum Ratings

Rating	Symbol	Value	Unit
Core supply voltage	V_{DDC}	1.5	V
Memory supply voltage	V_{DDM}	4.0	V
PLL supply voltage	V_{DDPLL}	1.5	V
I/O supply voltage	V_{DDIO}	–0.2 to 4.0	V
Input voltage	V_{IN}	(GND – 0.2) to 4.0	V
Reference voltage	V_{REF}	4.0	V
Maximum operating temperature	T_J	105	°C
Minimum operating temperature	T_A	–40	°C
Storage temperature range	T_{STG}	–55 to +150	°C

Notes:
1. Functional operating conditions are given in **Table 3.**
2. Absolute maximum ratings are stress ratings only, and functional operation at the maximum is not guaranteed. Stress beyond the listed limits may affect device reliability or cause permanent damage.
3. **Section 3.1**, *Thermal Design Considerations* includes a formula for computing the chip junction temperature (T_J).

2.2 Recommended Operating Conditions

Table 3 lists recommended operating conditions. Proper device operation outside of these conditions is not guaranteed.

Table 3. Recommended Operating Conditions

Rating	Symbol	Value	Unit
Core supply voltage	V_{DDC}	1.14 to 1.26	V
Memory supply voltage	V_{DDM}	2.38 to 2.63	V
PLL supply voltage	V_{DDPLL}	1.14 to 1.26	V
I/O supply voltage	V_{DDIO}	3.14 to 3.47	V
Reference voltage	V_{REF}	1.19 to 1.31	V
Operating temperature range	T_J T_A	maximum: 105 minimum: –40	°C °C

Because of an order from the United States International Trade Commission, BGA-packaged product lines and part numbers indicated here currently are not available from Freescale for import or sale in the United States prior to September 2010: MSC7116VF1000, MSC7116VM1000, MSC711XADS

2.3 Thermal Characteristics

Table 4 describes thermal characteristics of the MSC7116 for the MAP-BGA package.

Table 4. Thermal Characteristics for MAP-BGA Package

Characteristic	Symbol	MAP-BGA 17 × 17 mm[5]		Unit
		Natural Convection	200 ft/min (1 m/s) airflow	
Junction-to-ambient[1, 2]	$R_{\theta JA}$	39	31	°C/W
Junction-to-ambient, four-layer board[1, 3]	$R_{\theta JA}$	23	20	°C/W
Junction-to-board[4]	$R_{\theta JB}$	12		°C/W
Junction-to-case[5]	$R_{\theta JC}$	7		°C/W
Junction-to-package-top[6]	Ψ_{JT}	2		°C/W

Notes:
1. Junction temperature is a function of die size, on-chip power dissipation, package thermal resistance, mounting site (board) temperature, ambient temperature, air flow, power dissipation of other components on the board, and board thermal resistance.
2. Per SEMI G38-87 and JEDEC JESD51-2 with the single layer board horizontal.
3. Per JEDEC JESD51-6 with the board horizontal.
4. Thermal resistance between the die and the printed circuit board per JEDEC JESD 51-8. Board temperature is measured on the top surface of the board near the package.
5. Thermal resistance between the die and the case top surface as measured by the cold plate method (MIL SPEC-883 Method 1012.1).
6. Thermal characterization parameter indicating the temperature difference between package top and the junction temperature per JEDEC JESD51-2.

Section 3.1, *Thermal Design Considerations* explains these characteristics in detail.

2.4 DC Electrical Characteristics

This section describes the DC electrical characteristics for the MSC7116.

Note: The leakage current is measured for nominal voltage values must vary in the same direction (for example, both V_{DDIO} and V_{DDC} vary by +2 percent or both vary by –2 percent).

Table 5. DC Electrical Characteristics

Characteristic	Symbol	Min	Typical	Max	Unit
Core and PLL voltage	V_{DDC} V_{DDPLL}	1.14	1.2	1.26	V
DRAM interface I/O voltage[1]	V_{DDM}	2.375	2.5	2.625	V
I/O voltage	V_{DDIO}	3.135	3.3	3.465	V
DRAM interface I/O reference voltage[2]	V_{REF}	$0.49 \times V_{DDM}$	1.25	$0.51 \times V_{DDM}$	V
DRAM interface I/O termination voltage[3]	VTT	$V_{REF} - 0.04$	V_{REF}	$V_{REF} + 0.04$	V
Input high CLKIN voltage	V_{IHCLK}	2.4	3.0	3.465	V
DRAM interface input high I/O voltage	V_{IHM}	$V_{REF} + 0.28$	V_{DDM}	$V_{DDM} + 0.3$	V
DRAM interface input low I/O voltage	V_{ILM}	–0.3	GND	$V_{REF} - 0.18$	V
Input leakage current, $V_{IN} = V_{DDIO}$	I_{IN}	–1.0	0.09	1	µA
V_{REF} input leakage current	I_{VREF}	—	—	5	µA

Because of an order from the United States International Trade Commission, BGA-packaged product lines and part numbers indicated here currently are not available from Freescale for import or sale in the United States prior to September 2010: MSC7116VF1000, MSC7116VM1000, MSC711XADS

Table 5. DC Electrical Characteristics (continued)

Characteristic	Symbol	Min	Typical	Max	Unit
Tri-state (high impedance off state) leakage current, $V_{IN} = V_{DDIO}$	I_{OZ}	–1.0	0.09	1	µA
Signal low input current, V_{IL} = 0.4 V	I_L	–1.0	0.09	1	µA
Signal high input current, V_{IH} = 2.0 V	I_H	–1.0	0.09	1	µA
Output high voltage, I_{OH} = –2 mA, except open drain pins	V_{OH}	2.0	3.0	—	V
Output low voltage, I_{OL}= 5 mA	V_{OL}	—	0	0.4	V
Typical power at 266 MHz[5]	P	—	293.0	—	mW

Notes:
1. The value of V_{DDM} at the MSC7116 device must remain within 50 mV of V_{DDM} at the DRAM device at all times.
2. V_{REF} must be equal to 50% of V_{DDM} and track V_{DDM} variations as measured at the receiver. Peak-to-peak noise must not exceed ±2% of the DC value.
3. V_{TT} is not applied directly to the MSC7116 device. It is the level measured at the far end signal termination. It should be equal to V_{REF}. This rail should track variations in the DC level of V_{REF}.
4. Output leakage for the memory interface is measured with all outputs disabled, 0 V ≤ V_{OUT} ≤ V_{DDM}.
5. The core power values were measured.using a standard EFR pattern at typical conditions (25°C, 300 MHz, 1.2 V core).

Table 6 lists the DDR DRAM capacitance.

Table 6. DDR DRAM Capacitance

Parameter/Condition	Symbol	Max	Unit
Input/output capacitance: DQ, DQS	C_{IO}	30	pF
Delta input/output capacitance: DQ, DQS	C_{DIO}	30	pF

Note: These values were measured under the following conditions:
- V_{DDM} = 2.5 V ± 0.125 V
- f = 1 MHz
- T_A = 25°C
- $V_{OUT} = V_{DDM}/2$
- V_{OUT} (peak to peak) = 0.2 V

Because of an order from the United States International Trade Commission, BGA-packaged product lines and part numbers indicated here currently are not available from Freescale for import or sale in the United States prior to September 2010: MSC7116VF1000, MSC7116VM1000, MSC711XADS

2.5 AC Timings

This section presents timing diagrams and specifications for individual signals and parallel I/O outputs and inputs. All AC timings are based on a 30 pF load, except where noted otherwise, and a 50 Ω transmission line. For any additional pF, use the following equations to compute the delay:

— Standard interface: $2.45 + (0.054 \times C_{load})$ ns

— DDR interface: $1.6 + (0.002 \times C_{load})$ ns

2.5.1 Clock and Timing Signals

The following tables describe clock signal characteristics. **Table 6** shows the maximum frequency values for internal (core, reference, and peripherals) and external (CLKO) clocks. You must ensure that maximum frequency values are not exceeded (see **Section 2.5.2** for the allowable ranges when using the PLL).

Table 6. Maximum Frequencies

Characteristic	Maximum in MHz
Core clock frequency (CLOCK)	266
External output clock frequency (CLKO)	67
Memory clock frequency (CK, $\overline{CK}$)	133
TDM clock frequency (TxRCK, TxTCK)	50

Table 7. Clock Frequencies in MHz

Characteristic	Symbol	Min	Max
CLKIN frequency	F_{CLKIN}	10	100
CLOCK frequency	F_{CORE}	—	266
CK, $\overline{CK}$ frequency	F_{CK}	—	133
TDMxRCK, TDMxTCK frequency	F_{TDMCK}	—	50
CLKO frequency	F_{CKO}	—	67
AHB/IPBus/APB clock frequency	F_{BCK}	—	133
Note: The rise and fall time of external clocks should be 5 ns maximum			

Table 8. System Clock Parameters

Characteristic	Min	Max	Unit
CLKIN frequency	10	100	MHz
CLKIN slope	—	5	ns
CLKIN frequency jitter (peak-to-peak)	—	1000	ps
CLKO frequency jitter (peak-to-peak)	—	133	ps

Because of an order from the United States International Trade Commission, BGA-packaged product lines and part numbers indicated here currently are not available from Freescale for import or sale in the United States prior to September 2010: MSC7116VF1000, MSC7116VM1000, MSC711XADS

2.5.2 Configuring Clock Frequencies

This section describes important requirements for configuring clock frequencies in the MSC7116 device when using the PLL block. To configure the device clocking, you must program four fields in the Clock Control Register (CLKCTL):

- *PLLDVF field*. Specifies the PLL division factor (PLLDVF + 1) to divide the input clock frequency F_{CLKIN}. The output of the divider block is the input to the multiplier block.
- *PLLMLTF field*. Specifies the PLL multiplication factor (PLLMLTF + 1). The output from the multiplier block is the loop frequency F_{LOOP}.
- *RNG field*. Selects the available PLL frequency range for F_{VCO}, either F_{LOOP} when the RNG bit is set (1) or $F_{LOOP}/2$ when the RNG bit is cleared (0).
- *CKSEL field*. Selects F_{CLKIN}, F_{VCO}, or $F_{VCO}/2$ as the source for the core clock.

There are restrictions on the frequency range permitted at the beginning of the multiplication portion of the PLL that affect the allowable values for the PLLDVF and PLLMLTF fields. The following sections define these restrictions and provide guidelines to configure the device clocking when using the PLL. Refer to the Clock and Power Management chapter in the *MSC711x Reference Manual* for details on the clock programming model.

2.5.2.1 PLL Multiplier Restrictions

There are two restrictions for correct usage of the PLL block:

- The input frequency to the PLL multiplier block (that is, the output of the divider) must be in the range 10–25 MHz.
- The output frequency of the PLL multiplier must be in the range 266–532 MHz.

When programming the PLL for a desired output frequency using the PLLDVF, PLLMLTF, and RNG fields, you must meet these constraints.

2.5.2.2 Input Division Factors and Corresponding CLKIN Frequency Range

The value of the PLLDVF field determines the allowable CLKIN frequency range, as shown in **Table 9**.

Table 9. CLKIN Frequency Ranges by Divide Factor Value

PLLDVF Field Value	Input Divide Factor	CLKIN Frequency Range	Comments
0x00	1	10 to 25 MHz	Input Division by 1
0x01	2	20 to 50 MHz	Input Division by 2
0x02	3	30 to 75 MHz	Input Division by 3
0x03	4	40 to 100 MHz	Input Division by 4
0x04	5	50 to 100 MHz	Input Division by 5
0x05	6	60 to 100 MHz	Input Division by 6
0x06	7	70 to 100 MHz	Input Division by 7
0x07	8	80 to 100 MHz	Input Division by 8
0x08	9	90 to 100 MHz	Input Division by 9
0x09	10	100 MHz	Input Division by 10
Note: The maximum CLKIN frequency is 100 MHz. Therefore, the PLLDVF value must be in the range from 1–10.			

Because of an order from the United States International Trade Commission, BGA-packaged product lines and part numbers indicated here currently are not available from Freescale for import or sale in the United States prior to September 2010: MSC7116VF1000, MSC7116VM1000, MSC711XADS

2.5.2.3 Multiplication Factor Range

The multiplier block output frequency ranges depend on the divided input clock frequency as shown in **Table 10**.

Table 10. PLLMLTF Ranges

Multiplier Block (Loop) Output Range	Minimum PLLMLTF Value	Maximum PLLMLTF Value
266 ≤ [Divided Input Clock × (PLLMLTF + 1)] ≤ 532 MHz	266/Divided Input Clock	532/Divided Input Clock
Note: This table results from the allowed range for F_{Loop}. The minimum and maximum multiplication factors are dependent on the frequency of the Divided Input Clock.		

2.5.2.4 Allowed Core Clock Frequency Range

The frequency delivered to the core, extended core, and peripherals depends on the value of the CLKCTRL[RNG] bit as shown in **Table 11**.

Table 11. F_{vco} Frequency Ranges

CLKCTRL[RNG] Value	Allowed Range of F_{vco}
1	266 ≤ F_{vco} ≤ 532 MHz
0	133 ≤ F_{vco} ≤ 266 MHz
Note: This table results from the allowed range for F_{vco}, which is F_{Loop} modified by CLKCTRL[RNG].	

This bit along with the CKSEL determines the frequency range of the core clock.

Table 12. Resulting Ranges Permitted for the Core Clock

CLKCTRL[CKSEL]	CLKCTRL[RNG]	Resulting Division Factor	Allowed Range of Core Clock	Comments
11	1	1	Reserved	Reserved
11	0	2	133 ≤ core clock ≤ 266 MHz	Limited by range of PLL
01	1	2	133 ≤ core clock ≤ 266 MHz	Limited by range of PLL
01	0	4	66.5 ≤ core clock ≤ 133 MHz	Limited by range of PLL
Note: This table results from the allowed range for F_{OUT}, which depends on clock selected via CLKCTRL[CKSEL].				

2.5.2.5 Core Clock Frequency Range When Using DDR Memory

The core clock can also be limited by the frequency range of the DDR devices in the system. **Table 13** summarizes this restriction.

Table 13. Core Clock Ranges When Using DDR

DDR Type	Allowed Frequency Range for DDR CK	Corresponding Range for the Core Clock	Comments
DDR 200 (PC-1600)	83–100 MHz	166 ≤ core clock ≤ 200 MHz	Core limited to 2 × maximum DDR frequency
DDR 266 (PC-2100) DDR 333 (PC-2600)	83–133 MHz	166 ≤ core clock ≤ 266 MHz	Core limited to 2 × maximum DDR frequency

Because of an order from the United States International Trade Commission, BGA-packaged product lines and part numbers indicated here currently are not available from Freescale for import or sale in the United States prior to September 2010: MSC7116VF1000, MSC7116VM1000, MSC711XADS

2.5.3 Reset Timing

The MSC7116 device has several inputs to the reset logic. All MSC7116 reset sources are fed into the reset controller, which takes different actions depending on the source of the reset. The reset status register indicates the most recent sources to cause a reset. **Table 14** describes the reset sources.

Table 14. Reset Sources

Name	Direction	Description
Power-on reset ($\overline{\text{PORESET}}$)	Input	Initiates the power-on reset flow that resets the MSC7116 and configures various attributes of the MSC7116. On $\overline{\text{PORESET}}$, the entire MSC7116 device is reset. SPLL and DLL states are reset, $\overline{\text{HRESET}}$ is driven, the SC1400 extended core is reset, and system configuration is sampled. The system is configured only when $\overline{\text{PORESET}}$ is asserted.
External Hard reset ($\overline{\text{HRESET}}$)	Input/ Output	Initiates the hard reset flow that configures various attributes of the MSC7116. While $\overline{\text{HRESET}}$ is asserted, $\overline{\text{HRESET}}$ is an open-drain output. Upon hard reset, $\overline{\text{HRESET}}$ is driven and the SC1400 extended core is reset.
Software watchdog reset	Internal	When the MSC7116 watchdog count reaches zero, a software watchdog reset is signalled. The enabled software watchdog event then generates an internal hard reset sequence.
Bus monitor reset	Internal	When the MSC7116 bus monitor count reaches zero, a bus monitor hard reset is asserted. The enabled bus monitor event then generates an internal hard reset sequence.
JTAG EXTEST, CLAMP, or HIGHZ command	Internal	When a Test Access Port (TAP) executes an EXTEST, CLAMP, or HIGHZ command, the TAP logic asserts an internal reset signal that generates an internal soft reset sequence.

Table 15 summarizes the reset actions that occur as a result of the different reset sources.

Table 15. Reset Actions for Each Reset Source

Reset Action/Reset Source	Power-On Reset ($\overline{\text{PORESET}}$)	Hard Reset ($\overline{\text{HRESET}}$)	Soft Reset (SRESET)
	External only	External or Internal (Software Watchdog or Bus Monitor)	JTAG Command: EXTEST, CLAMP, or HIGHZ
Configuration pins sampled (refer to **Section 2.5.3.1** for details).	Yes	No	No
PLL and clock synthesis states Reset	Yes	No	No
$\overline{\text{HRESET}}$ Driven	Yes	Yes	No
Software watchdog and bus time-out monitor registers	Yes	Yes	Yes
Clock synthesis modules (STOPCTRL, HLTREQ, and HLTACK) reset	Yes	Yes	Yes
Extended core reset	Yes	Yes	Yes
Peripheral modules reset	Yes	Yes	Yes

2.5.3.1 Power-On Reset ($\overline{\text{PORESET}}$) Pin

Asserting $\overline{\text{PORESET}}$ initiates the power-on reset flow. $\overline{\text{PORESET}}$ must be asserted externally for at least 16 CLKIN cycles after external power to the MSC7116 reaches at least 2/3 V_{DD}.

Because of an order from the United States International Trade Commission, BGA-packaged product lines and part numbers indicated here currently are not available from Freescale for import or sale in the United States prior to September 2010: MSC7116VF1000, MSC7116VM1000, MSC711XADS

2.5.3.2 Reset Configuration

The MSC7116 has two mechanisms for writing the reset configuration:

- From a host through the host interface (HDI16)
- From memory through the I^2C interface

Five signal levels (see **Chapter 1** for signal description details) are sampled on $\overline{\text{PORESET}}$ deassertion to define the boot and operating conditions:

- BM[0–1]
- SWTE
- H8BIT
- HDSP

2.5.3.3 Reset Timing Tables

Table 16 and **Figure 4** describe the reset timing for a reset configuration write.

Table 16. Timing for a Reset Configuration Write

No.	Characteristics	Expression	Unit
1	Required external $\overline{\text{PORESET}}$ duration minimum	$16/F_{CLKIN}$	clocks
2	Delay from $\overline{\text{PORESET}}$ deassertion to $\overline{\text{HRESET}}$ deassertion	$521/F_{CLKIN}$	clocks
Note:	Timings are not tested, but are guaranteed by design.		

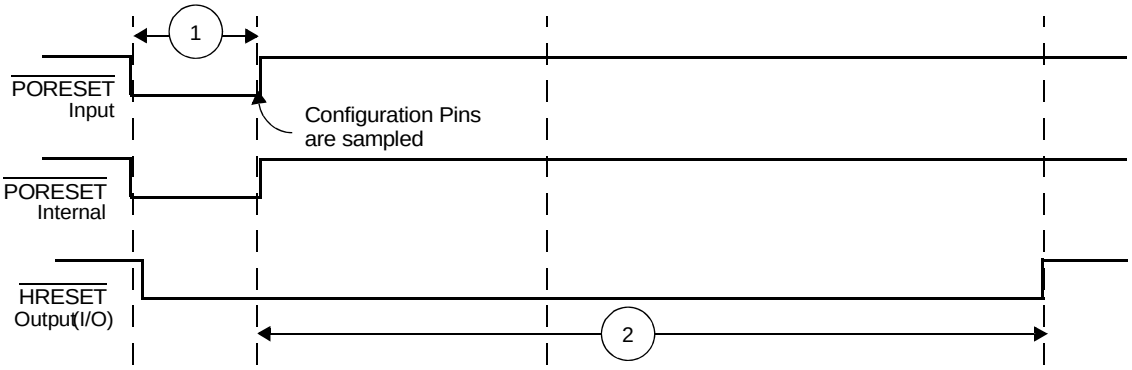

Figure 4. Timing Diagram for a Reset Configuration Write

Because of an order from the United States International Trade Commission, BGA-packaged product lines and part numbers indicated here currently are not available from Freescale for import or sale in the United States prior to September 2010: MSC7116VF1000, MSC7116VM1000, MSC711XADS

2.5.4 DDR DRAM Controller Timing

This section provides the AC electrical characteristics for the DDR DRAM interface.

2.5.4.1 DDR DRAM Input AC Timing Specifications

Table 17 provides the input AC timing specifications for the DDR DRAM interface.

Table 17. DDR DRAM Input AC Timing

No.	Parameter	Symbol	Min	Max	Unit
—	AC input low voltage	V_{IL}	—	V_{REF} – 0.31	V
—	AC input high voltage	V_{IH}	V_{REF} + 0.31	V_{DDM} + 0.3	V
201	Maximum Dn input setup skew relative to DQSn input	—	—	900	ps
202	Maximum Dn input hold skew relative to DQSn input	—	—	900	ps

Notes:
1. Maximum possible skew between a data strobe (DQSn) and any corresponding bit of data (D[8n + {0...7}] if 0 ≤ n ≤ 7).
2. See **Table 18** for t_{CK} value.
3. Dn should be driven at the same time as DQSn. This is necessary because the DQSn centering on the DQn data tenure is done internally.

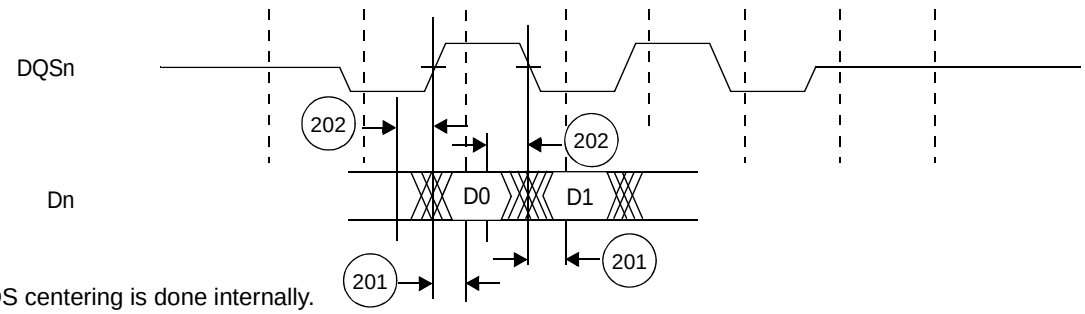

Note: DQS centering is done internally.

Figure 5. DDR DRAM Input Timing Diagram

2.5.4.2 DDR DRAM Output AC Timing Specifications

Table 18 and **Table 19** list the output AC timing specifications and measurement conditions for the DDR DRAM interface.

Table 18. DDR DRAM Output AC Timing

No.	Parameter	Symbol	Min	Max	Unit
200	CK cycle time, (CK/$\overline{CK}$ crossing)[1] • 100 MHz (DDR200) • 150 MHz (DDR300)	t_{CK}	 10 6.67	 — —	 ns ns
204	An/$\overline{RAS}$/$\overline{CAS}$/$\overline{WE}$/CKE output setup with respect to CK	t_{DDKHAS}	$0.5 \times t_{CK} - 1000$	—	ps
205	An/$\overline{RAS}$/$\overline{CAS}$/$\overline{WE}$/CKE output hold with respect to CK	t_{DDKHAX}	$0.5 \times t_{CK} - 1000$	—	ps
206	$\overline{CSn}$ output setup with respect to CK	t_{DDKHCS}	$0.5 \times t_{CK} - 1000$	—	ps
207	$\overline{CSn}$ output hold with respect to CK	t_{DDKHCX}	$0.5 \times t_{CK} - 1000$	—	ps
208	CK to DQSn[2]	t_{DDKHMH}	–600	600	ps

Because of an order from the United States International Trade Commission, BGA-packaged product lines and part numbers indicated here currently are not available from Freescale for import or sale in the United States prior to September 2010: MSC7116VF1000, MSC7116VM1000, MSC711XADS

Table 18. DDR DRAM Output AC Timing (continued)

No.	Parameter	Symbol	Min	Max	Unit
209	Dn/DQMn output setup with respect to DQSn[3]	t_{DDKHDS}, t_{DDKLDS}	$0.25 \times t_{CK} - 750$	—	ps
210	Dn/DQMn output hold with respect to DQSn[3]	t_{DDKHDX}, t_{DDKLDX}	$0.25 \times t_{CK} - 750$	—	ps
211	DQSn preamble start[4]	t_{DDKHMP}	$-0.25 \times t_{CK}$	—	ps
212	DQSn epilogue end[5]	t_{DDKHME}	–600	600	ps

Notes:
1. All CK/$\overline{CK}$ referenced measurements are made from the crossing of the two signals ±0.1 V.
2. t_{DDKHMH} can be modified through the TCFG2[WRDD] DQSS override bits. The DRAM requires that the first write data strobe arrives 75–125% of a DRAM cycle after the write command is issued. Any skew between DQSn and CK must be considered when trying to achieve this 75%–125% goal. The TCFG2[WRDD] bits can be used to shift DQSn by 1/4 DRAM cycle increments. The skew in this case refers to an internal skew existing at the signal connections. By default, the CK/$\overline{CK}$ crossing occurs in the middle of the control signal (An/$\overline{RAS}$/$\overline{CAS}$/$\overline{WE}$/CKE) tenure. Setting TCFG2[ACSM] bit shifts the control signal assertion 1/2 DRAM cycle earlier than the default timing. This means that the signal is asserted no earlier than 600 ps before the CK/$\overline{CK}$ crossing and no later than 600 ps after the crossing time; the device uses 1200 ps of the skew budget (the interval from –600 to +600 ps). Timing is verified by referencing the falling edge of CK. See Chapter 10 of the *MSC711x Reference Manual* for details.
3. Determined by maximum possible skew between a data strobe (DQS) and any corresponding bit of data. The data strobe should be centered inside of the data eye.
4. Please note that this spec is in reference to the DQSn first rising edge. It could also be referenced from CK(r), but due to programmable delay of the write strobes (TCFG2[WRDD]), there pre-amble may be extended for a full DRAM cycle. For this reason, we reference from DQSn.
5. All outputs are referenced to the rising edge of CK. Note that this is essentially the CK/DQSn skew in spec 208. In addition there is no real “maximum” time for the epilogue end. JEDEC does not require this is as a device limitation, but simply for the chip to guarantee fast enough write-to-read turn-around times. This is already guaranteed by the memory controller operation.

Figure 6 shows the DDR DRAM output timing diagram.

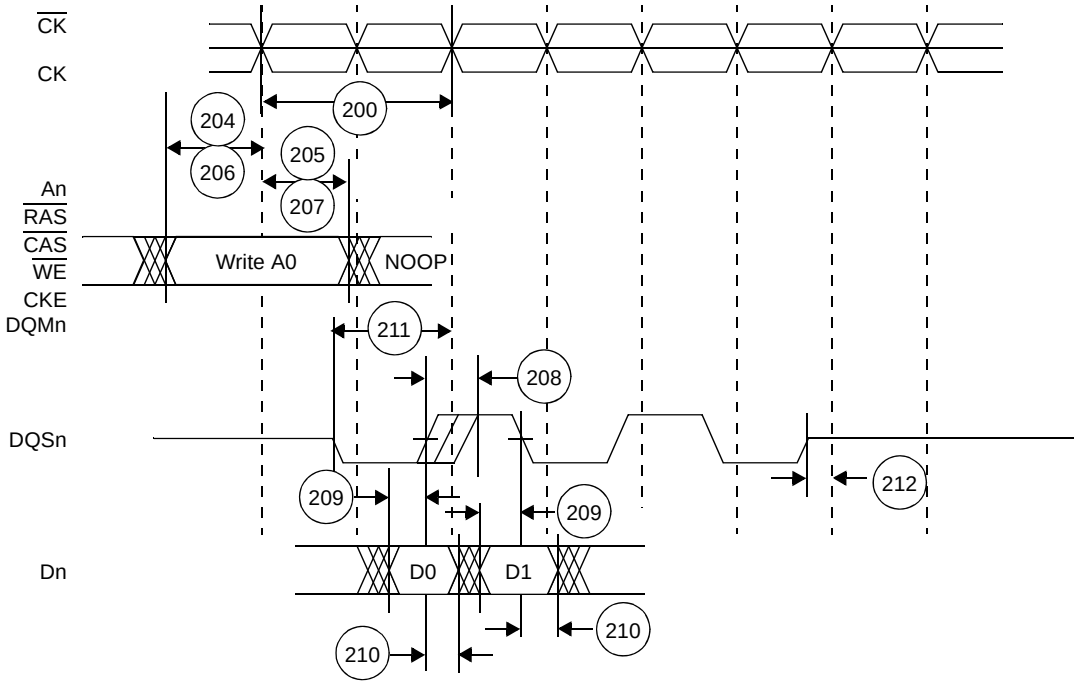

Figure 6. DDR DRAM Output Timing Diagram

Because of an order from the United States International Trade Commission, BGA-packaged product lines and part numbers indicated here currently are not available from Freescale for import or sale in the United States prior to September 2010: MSC7116VF1000, MSC7116VM1000, MSC711XADS

Figure 7 provides the AC test load for the DDR DRAM bus.

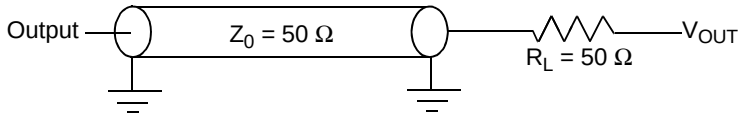

Figure 7. DDR DRAM AC Test Load

Table 19. DDR DRAM Measurement Conditions

Symbol	DDR DRAM	Unit
V_{TH}[1]	V_{REF} ± 0.31 V	V
V_{OUT}[2]	0.5 × V_{DDM}	V

Notes: **1.** Data input threshold measurement point.
2. Data output measurement point.

2.5.5 TDM Timing

Table 20. TDM Timing

No.	Characteristic	Expression	Min	Max	Units
300	TDMxRCK/TDMxTCK	TC	20.0	—	ns
301	TDMxRCK/TDMxTCK High Pulse Width	0.4 × TC	8.0	—	ns
302	TDMxRCK/TDMxTCK Low Pulse Width	0.4 × TC	8.0	—	ns
303	TDM all input Setup time		3.0	—	ns
304	TDMxRD Hold time		3.5	—	ns
305	TDMxTFS/TDMxRFS input Hold time		2.0	—	ns
306	TDMxTCK High to TDMxTD output active		4.0	—	ns
307	TDMxTCK High to TDMxTD output valid		—	14.0	ns
308	TDMxTD hold time		2.0	—	ns
309	TDMxTCK High to TDMxTD output high impedance		—	10.0	ns
310	TDMxTFS/TDMxRFS output valid		—	13.5	ns
311	TDMxTFS/TDMxRFS output hold time		2.5	—	ns

Notes: **1.** Output values are based on 30 pF capacitive load.
2. Inputs are referenced to the sampling that the TDM is programmed to use. Outputs are referenced to the programming edge they are programmed to use. Use of the rising edge or falling edge as a reference is programmable. Refer to the *MSC711x Reference Manual* for details. TDMxTCK and TDMxRCK are shown using the rising edge.

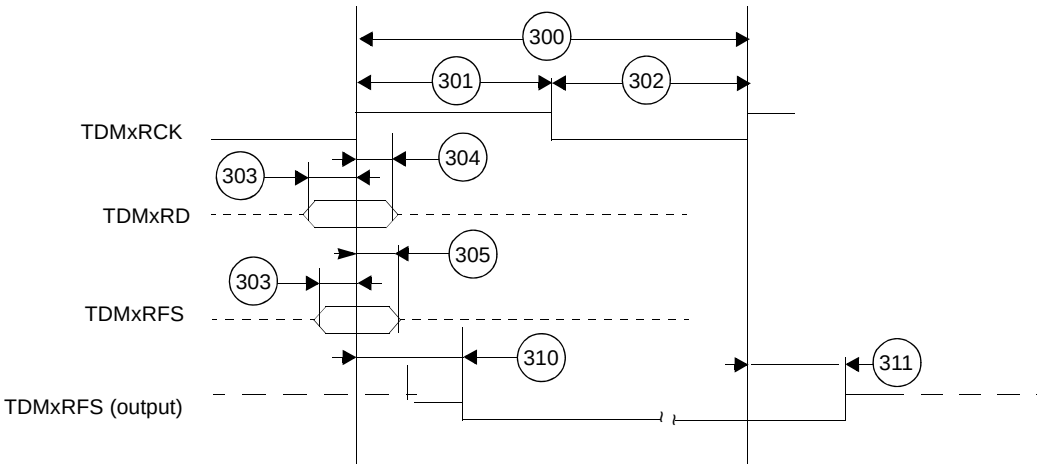

Figure 8. TDM Receive Signals

Because of an order from the United States International Trade Commission, BGA-packaged product lines and part numbers indicated here currently are not available from Freescale for import or sale in the United States prior to September 2010: MSC7116VF1000, MSC7116VM1000, MSC711XADS

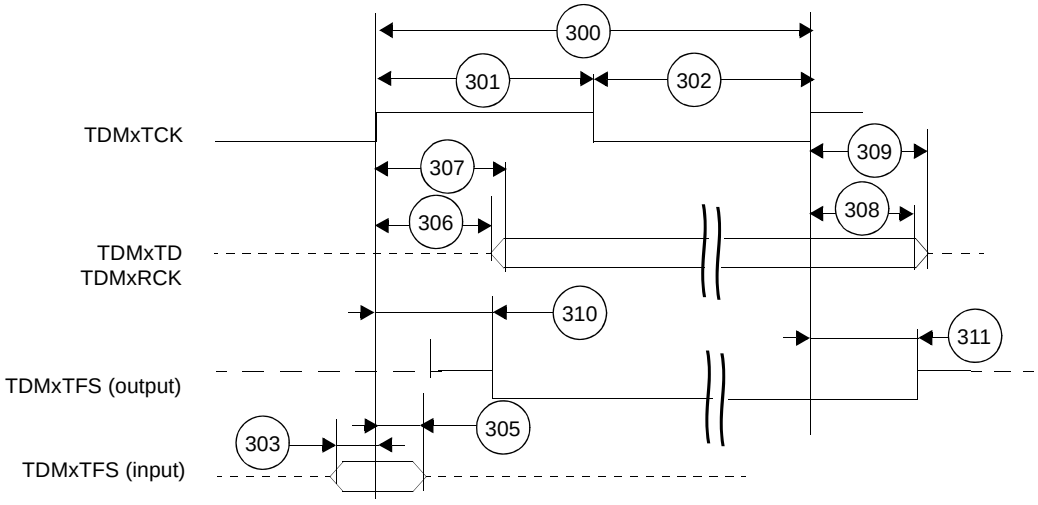

Figure 9. TDM Transmit Signals

2.5.6 Ethernet Timing

2.5.6.1 Receive Signal Timing

Table 21. Receive Signal Timing

No.	Characteristics	Min	Max	Unit
800	Receive clock period: • MII: RXCLK (max frequency = 25 MHz) • RMII: REFCLK (max frequency = 50 MHz)	 40 20	 — —	 ns ns
801	Receive clock pulse width high—as a percent of clock period • MII: RXCLK • RMII: REFCLK	35 14 7	65 — —	% ns ns
802	Receive clock pulse width low—as a percent of clock period: • MII: RXCLK • RMII: REFCLK	35 14 7	65 — —	% ns ns
803	RXDn, RX_DV, CRS_DV, RX_ER to receive clock rising edge setup time	4	—	ns
804	Receive clock rising edge to RXDn, RX_DV, CRS_DV, RX_ER hold time	2	—	ns

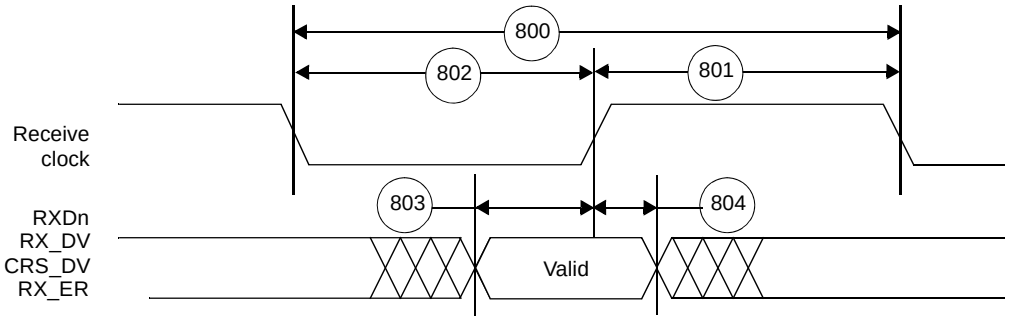

Figure 10. Ethernet Receive Signal Timing

Because of an order from the United States International Trade Commission, BGA-packaged product lines and part numbers indicated here currently are not available from Freescale for import or sale in the United States prior to September 2010: MSC7116VF1000, MSC7116VM1000, MSC711XADS

2.5.6.2 Transmit Signal Timing

Table 22. Transmit Signal Timing

No.	Characteristics	Min	Max	Unit
800	Transmit clock period: • MII: TXCLK • RMII: REFCLK	 40 20	 — —	 ns ns
801	Transmit clock pulse width high—as a percent of clock period • MII: RXCLK • RMII: REFCLK	35 14 7	65 — —	% ns ns
802	Transmit clock pulse width low—as a percent of clock period: • MII: RXCLK • RMII: REFCLK	35 14 7	65 — —	% ns ns
805	Transmit clock to TXDn, TX_EN, TX_ER invalid	4	—	ns
806	Transmit clock to TXDn, TX_EN, TX_ER valid	—	14	ns

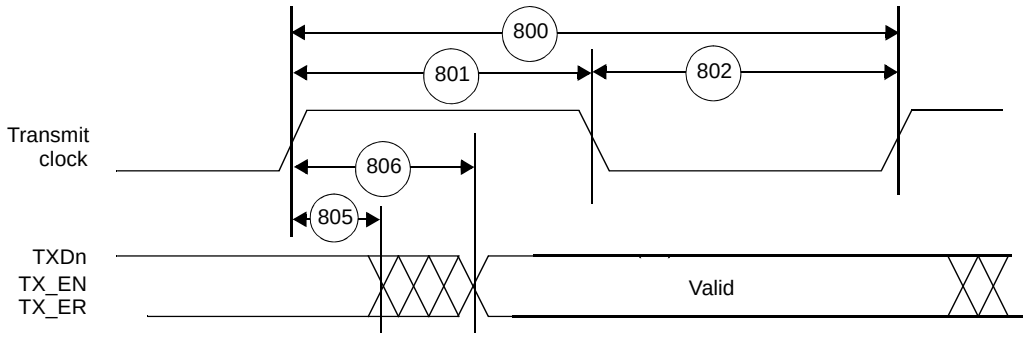

Figure 11. Ethernet Receive Signal Timing

2.5.6.3 Asynchronous Input Signal Timing

Table 23. Asynchronous Input Signal Timing

No.	Characteristics	Min	Max	Unit
807	• MII: CRS and COL minimum pulse width (1.5 × TXCLK period) • RMII: CRS_DV minimum pulse width (1.5 x REFCLK period)	60 30	— —	ns ns

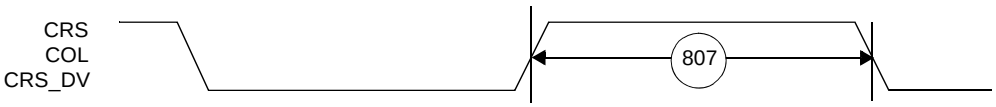

Figure 12. Asynchronous Input Signal Timing

Because of an order from the United States International Trade Commission, BGA-packaged product lines and part numbers indicated here currently are not available from Freescale for import or sale in the United States prior to September 2010: MSC7116VF1000, MSC7116VM1000, MSC711XADS

2.5.6.4 Management Interface Timing

Table 24. Ethernet Controller Management Interface Timing

No.	Characteristics	Min	Max	Unit
808	MDC period	400	—	ns
809	MDC pulse width high	160	—	ns
810	MDC pulse width low	160	—	ns
811	MDS falling edge to MDIO output invalid (minimum propagation delay)	0	—	ns
812	MDS falling edge to MDIO output valid (maximum propagation delay)	—	15	ns
813	MDIO input to MDC rising edge setup time	10	—	ns
814	MDC rising edge to MDIO input hold time	10	—	ns

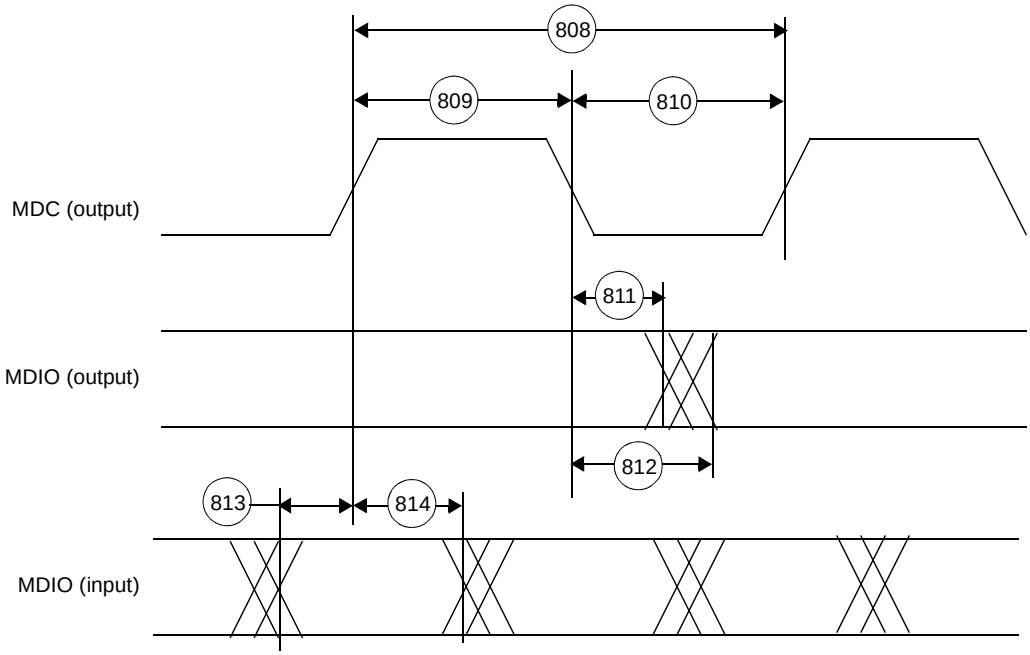

Figure 13. Serial Management Channel Timing

Because of an order from the United States International Trade Commission, BGA-packaged product lines and part numbers indicated here currently are not available from Freescale for import or sale in the United States prior to September 2010: MSC7116VF1000, MSC7116VM1000, MSC711XADS

2.5.7 HDI16 Signals

Table 25. Host Interface (HDI16) Timing[1, 2]

No.	Characteristics[3]	Expression	Value	Unit
40	Host Interface Clock period	T_{CORE}	Note 1	ns
44a	Read data strobe minimum assertion width[4] HACK read minimum assertion width	$2.0 \times T_{CORE} + 9.0$	Note 11	ns
44b	Read data strobe minimum deassertion width[4] HACK read minimum deassertion width	$1.5 \times T_{CORE}$	Note 11	ns
44c	Read data strobe minimum deassertion width[4] after "Last Data Register" reads[5,6], or between two consecutive CVR, ICR, or ISR reads[7] HACK minimum deassertion width after "Last Data Register" reads[5,6]	$2.5 \times T_{CORE}$	Note 11	ns
45	Write data strobe minimum assertion width[8] HACK write minimum assertion width	$1.5 \times T_{CORE}$	Note 11	ns
46	Write data strobe minimum deassertion width[8] HACK write minimum deassertion width after ICR, CVR and Data Register writes[5]	$2.5 \times T_{CORE}$	Note 11	ns
47	Host data input minimum setup time before write data strobe deassertion[8] Host data input minimum setup time before HACK write deassertion	—	2.5	ns
48	Host data input minimum hold time after write data strobe deassertion[8] Host data input minimum hold time after HACK write deassertion	—	2.5	ns
49	Read data strobe minimum assertion to output data active from high impedance[4] HACK read minimum assertion to output data active from high impedance	—	1.0	ns
50	Read data strobe maximum assertion to output data valid[4] HACK read maximum assertion to output data valid	$(2.0 \times T_{CORE}) + 8.0$	Note 11	ns
51	Read data strobe maximum deassertion to output data high impedance[4] HACK read maximum deassertion to output data high impedance	—	9.0	ns
52	Output data minimum hold time after read data strobe deassertion[4] Output data minimum hold time after HACK read deassertion	—	1.0	ns
53	HCS[1–2] minimum assertion to read data strobe assertion[4]	—	0.5	ns
54	HCS[1–2] minimum assertion to write data strobe assertion[8]	—	0.0	ns
55	HCS[1–2] maximum assertion to output data valid	$(2.0 \times T_{CORE}) + 6.0$	Note 11	ns
56	HCS[1–2] minimum hold time after data strobe deassertion[9]	—	0.5	ns
57	HA[0–2], HRW minimum setup time before data strobe assertion[9]	—	5.0	ns
58	HA[0–2], HRW minimum hold time after data strobe deassertion[9]	—	5.0	ns
61	Maximum delay from read data strobe deassertion to host request deassertion for "Last Data Register" read[4, 5, 10]	$(3.0 \times T_{CORE}) + 6.0$	Note 11	ns
62	Maximum delay from write data strobe deassertion to host request deassertion for "Last Data Register" write[5,8,10]	$(3.0 \times T_{CORE}) + 6.0$	Note 11	ns
63	Minimum delay from DMA HACK (OAD=0) or Read/Write data strobe(OAD=1) deassertion to HREQ assertion.	$(2.0 \times T_{CORE}) + 1.0$	Note 11	ns
64	Maximum delay from DMA HACK (OAD=0) or Read/Write data strobe(OAD=1) assertion to HREQ deassertion	$(5.0 \times T_{CORE}) + 6.0$	Note 11	ns

Notes:
1. T_{CORE} = core clock period. At 300 MHz, T_{CORE} = 3.333 ns.
2. In the timing diagrams below, the controls pins are drawn as active low. The pin polarity is programmable.
3. V_{DD} = 3.3 V ± 0.15 V; T_J = –40°C to +105 °C, C_L = 30 pF for maximum delay timings and C_L = 0 pF for minimum delay timings.
4. The read data strobe is HRD/HRD in the dual data strobe mode and HDS/HDS in the single data strobe mode.
5. For 64-bit transfers, the "last data register" is the register at address 0x7, which is the last location to be read or written in data transfers. This is RX0/TX0 in the little endian mode (HBE = 0), or RX3/TX3 in the big endian mode (HBE = 1).
6. This timing is applicable only if a read from the "last data register" is followed by a read from the RX[0–3] registers without first polling RXDF or HREQ bits, or waiting for the assertion of the HREQ/HREQ signal.
7. This timing is applicable only if two consecutive reads from one of these registers are executed.
8. The write data strobe is HWR in the dual data strobe mode and HDS in the single data strobe mode.
9. The data strobe is host read (HRD/HRD) or host write (HWR/HWR) in the dual data strobe mode and host data strobe (HDS/HDS) in the single data strobe mode.
10. The host request is HREQ/HREQ in the single host request mode and HRRQ/HRRQ and HTRQ/HTRQ in the double host request mode. HRRQ/HRRQ is deasserted only when HOTX fifo is empty, HTRQ/HTRQ is deasserted only if HORX fifo is full
11. Compute the value using the expression.
12. The read and write data strobe minimum deassertion width for non-"last data register" accesses in single and dual data strobe modes is based on timings 57 and 58.

Because of an order from the United States International Trade Commission, BGA-packaged product lines and part numbers indicated here currently are not available from Freescale for import or sale in the United States prior to September 2010: MSC7116VF1000, MSC7116VM1000, MSC711XADS

Figure 14 and **Figure 15** show HDI16 read signal timing. **Figure 16** and **Figure 17** show HDI16 write signal timing.

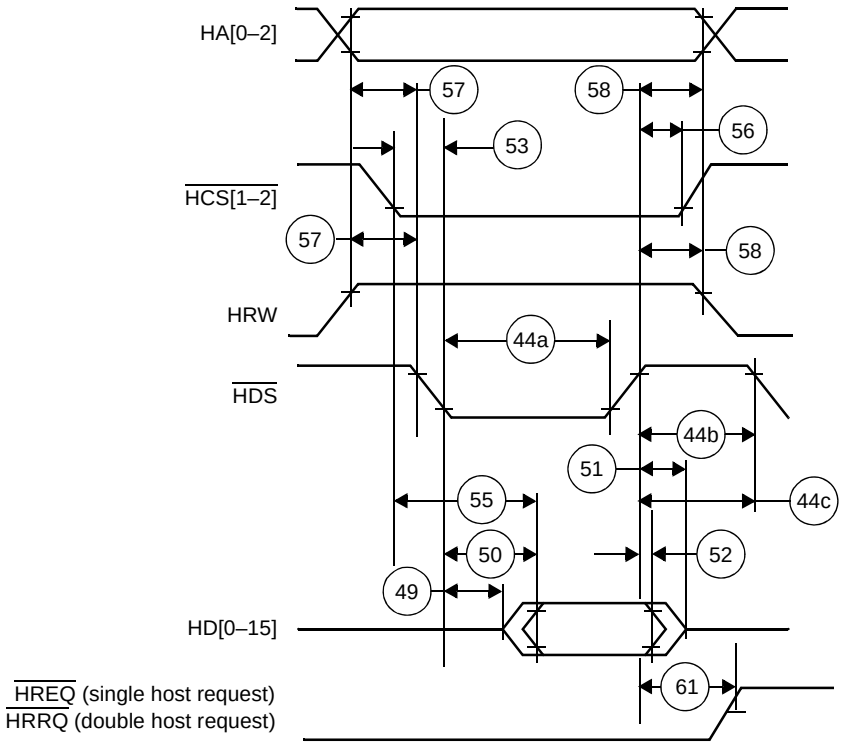

Figure 14. Read Timing Diagram, Single Data Strobe

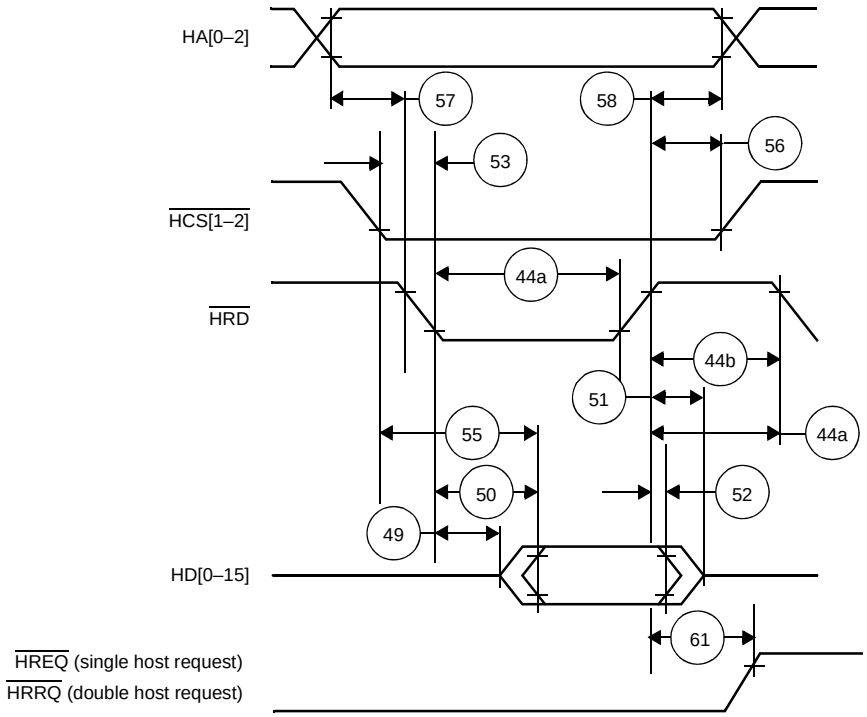

Figure 15. Read Timing Diagram, Double Data Strobe

Because of an order from the United States International Trade Commission, BGA-packaged product lines and part numbers indicated here currently are not available from Freescale for import or sale in the United States prior to September 2010: MSC7116VF1000, MSC7116VM1000, MSC711XADS

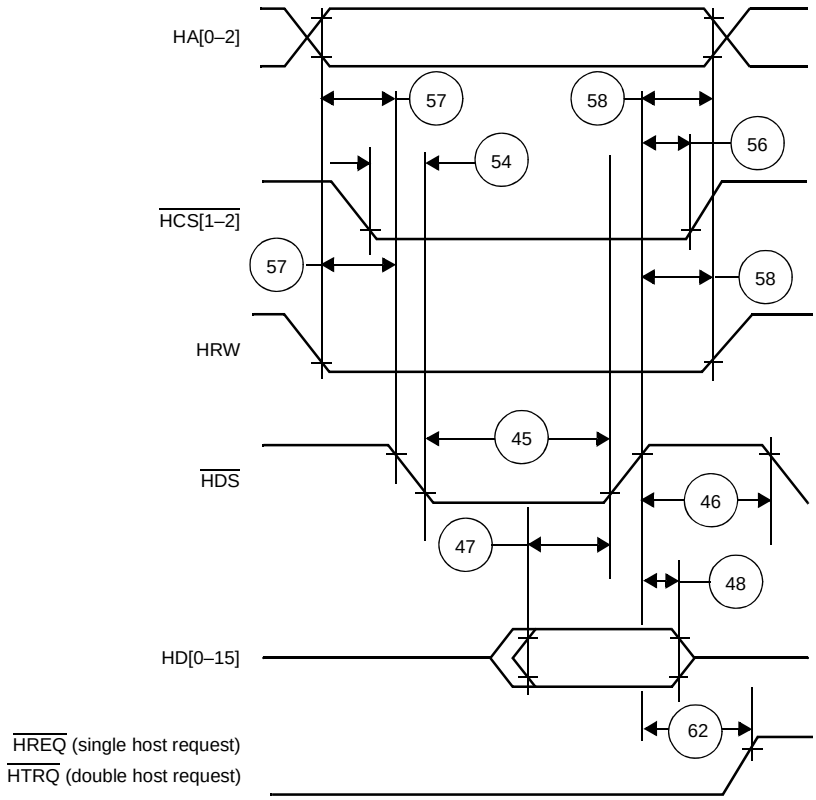

Figure 16. Write Timing Diagram, Single Data Strobe

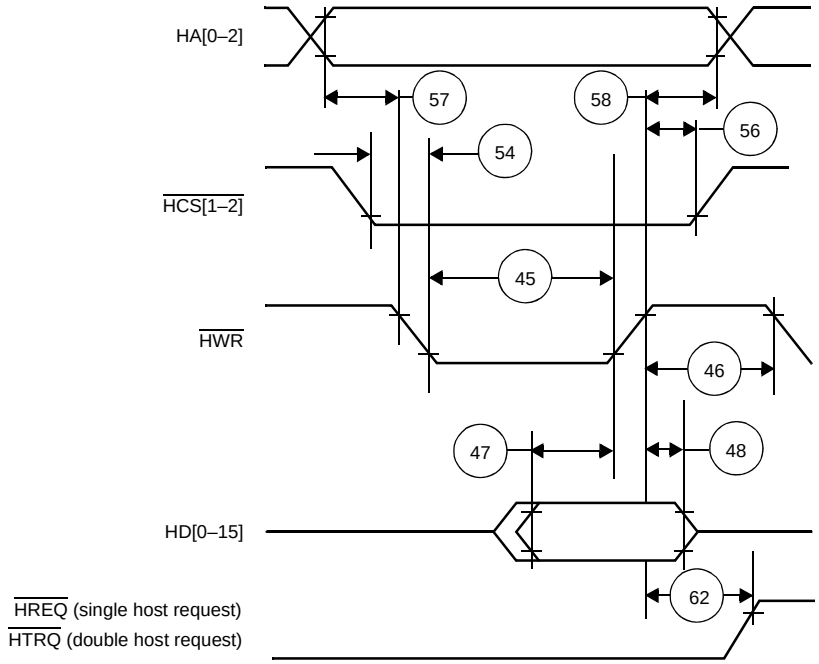

Figure 17. Write Timing Diagram, Double Data Strobe

Because of an order from the United States International Trade Commission, BGA-packaged product lines and part numbers indicated here currently are not available from Freescale for import or sale in the United States prior to September 2010: MSC7116VF1000, MSC7116VM1000, MSC711XADS

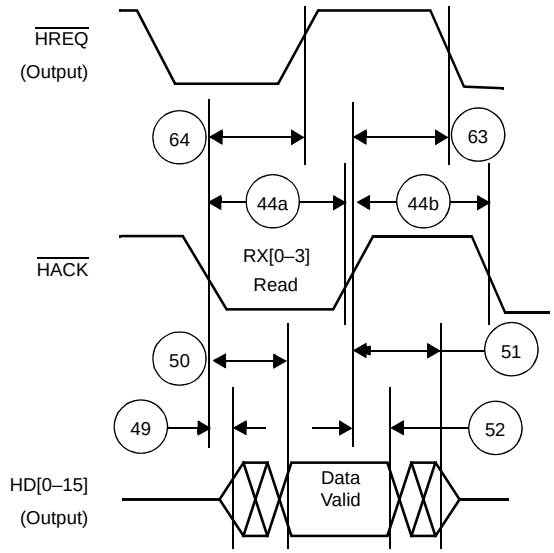

Figure 18. Host DMA Read Timing Diagram, HPCR[OAD] = 0

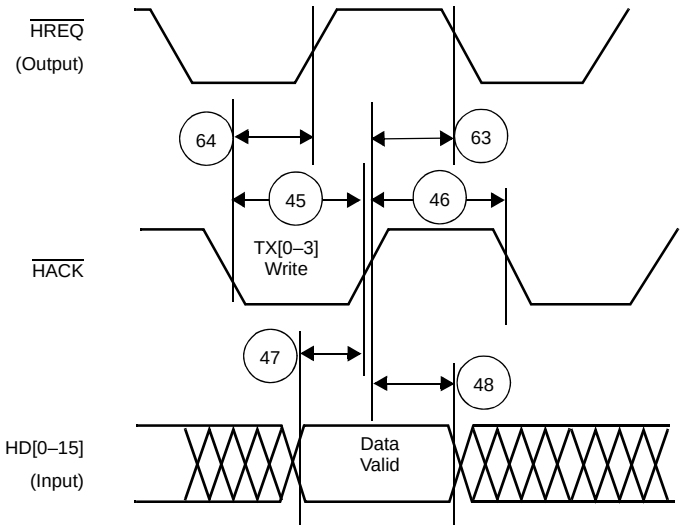

Figure 19. Host DMA Write Timing Diagram, HPCR[OAD] = 0

Because of an order from the United States International Trade Commission, BGA-packaged product lines and part numbers indicated here currently are not available from Freescale for import or sale in the United States prior to September 2010: MSC7116VF1000, MSC7116VM1000, MSC711XADS

2.5.8 I²C Timing

Table 26. I²C Timing

No.	Characteristic	Fast		Unit
		Min	Max	
450	SCL clock frequency	0	400	kHz
451	Hold time START condition	(SCL clock period/2) – 0.3	—	µs
452	SCL low period	(SCL clock period/2) – 0.3	—	µs
453	SCL high period	(SCL clock period/2) – 0.1	—	µs
454	Repeated START set-up time (not shown in figure)	$2 \times 1/F_{BCK}$	—	µs
455	Data hold time	0	—	µs
456	Data set-up time	250	—	ns
457	SDA and SCL rise time	—	700	ns
458	SDA and SCL fall time	—	300	ns
459	Set-up time for STOP	(SCL clock period/2) – 0.7	—	µs
460	Bus free time between STOP and START	(SCL clock period/2) – 0.3	—	µs
Note:	SDA set-up time is referenced to the rising edge of SCL. SDA hold time is referenced to the falling edge of SCL. Load capacitance on SDA and SCL is 400 pF.			

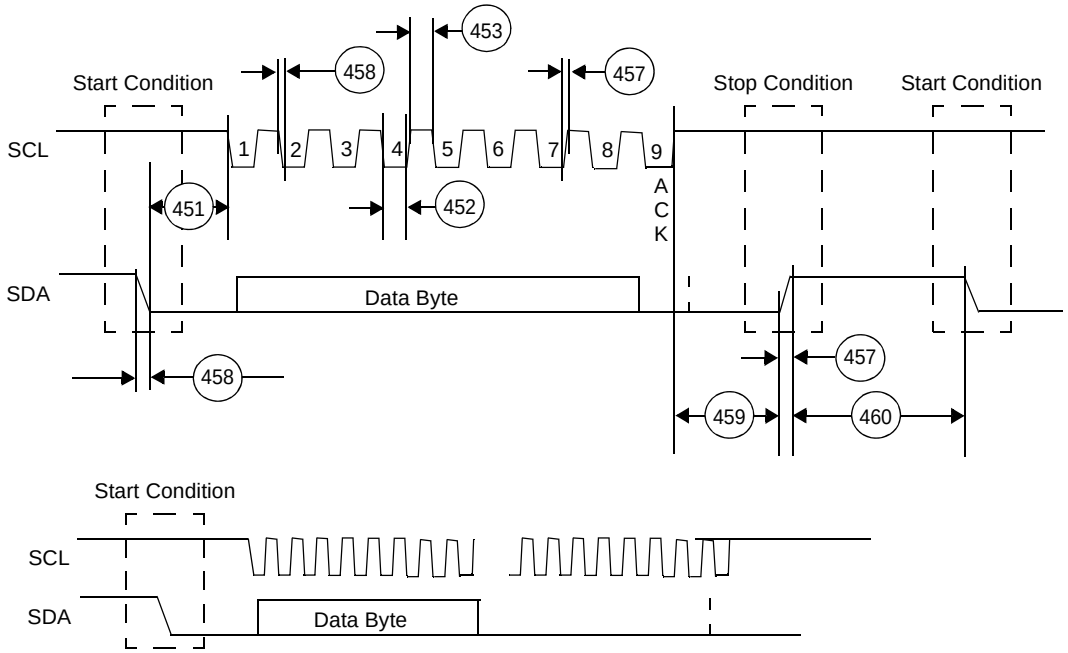

Figure 20. I²C Timing Diagram

Because of an order from the United States International Trade Commission, BGA-packaged product lines and part numbers indicated here currently are not available from Freescale for import or sale in the United States prior to September 2010: MSC7116VF1000, MSC7116VM1000, MSC711XADS

2.5.9 UART Timing

Table 27. UART Timing

No.	Characteristics	Expression	Min	Max	Unit
—	Internal bus clock (APBCLK)	$F_{CORE}/2$	—	133	MHz
—	Internal bus clock period (1/APBCLK)	T_{APBCLK}	7.52	—	ns
400	URXD and UTXD inputs high/low duration	$16 \times T_{APBCLK}$	120.3	—	ns
401	URXD and UTXD inputs rise/fall time		—	5	ns
402	UTXD output rise/fall time		—	5	ns

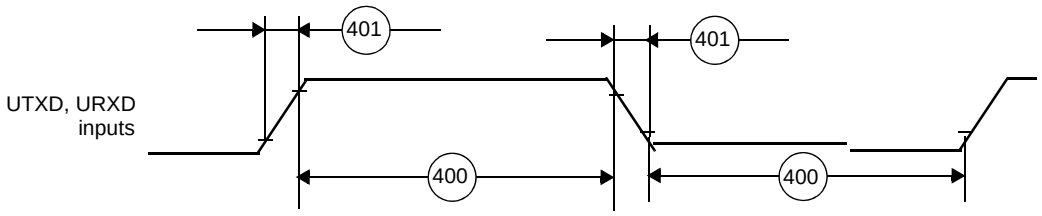

Figure 21. UART Input Timing

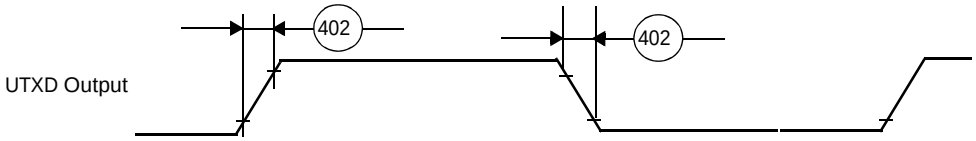

Figure 22. UART Output Timing

2.5.10 EE Timing

Table 28. EE0 Timing

Number	Characteristics	Type	Min
65	EE0 input to the core	Asynchronous	4 core clock periods
66	EE0 output from the core	Synchronous to core clock	1 core clock period

Notes:
1. The core clock is the SC1400 core clock. The ratio between the core clock and CLKOUT is configured during power-on-reset.
2. Configure the direction of the EE pin in the EE_CTRL register (see the *SC140/SC1400 Core Reference Manual* for details.
3. Refer to **Table 1-11** on page 1-16 for details on EE pin functionality.

Figure 24 shows the signal behavior of the EE pin.

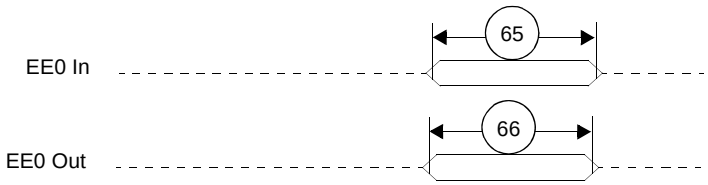

Figure 23. EE Pin Timing

Because of an order from the United States International Trade Commission, BGA-packaged product lines and part numbers indicated here currently are not available from Freescale for import or sale in the United States prior to September 2010: MSC7116VF1000, MSC7116VM1000, MSC711XADS

2.5.11 Event Timing

Table 29. EVNT Signal Timing

Number	Characteristics	Type	Min
67	EVNT as input	Asynchronous	1.5 × APBCLK periods
68	EVNT as output	Synchronous to core clock	1 APBCLK period

Notes:
1. Refer to **Table 27** for a definition of the APBCLK period.
2. Direction of the EVNT signal is configured through the GPIO and Event port registers.
3. Refer to the signal chapter in the *MSC711x Reference Manual* for details on EVNT pin functionality.

Figure 24 shows the signal behavior of the EVNT pins.

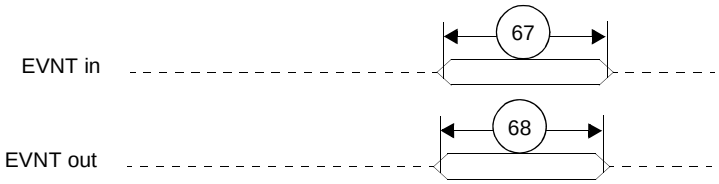

Figure 24. EVNT Pin Timing

2.5.12 GPIO Timing

Table 30. GPIO Signal Timing[1,2,3]

Number	Characteristics	Type	Min
601	GPI[4,5]	Asynchronous	1.5 × APBCLK periods
602	GPO[5]	Synchronous to core clock	1 APBCLK period
603	Port A edge-sensitive interrupt	Asynchronous	1.5 × APBCLK periods
604	Port A level-sensitive interrupt	Asynchronous	3 × APBCLK periods[6]

Notes:
1. Refer to **Table 27** for a definition of the APBCLK period.
2. Direction of the GPIO signal is configured through the GPIO port registers.
3. Refer to **Section 1.5** for details on GPIO pin functionality.
4. GPI data is synchronized to the APBCLK internally and the minimum listed is the capability of the hardware to capture data into a register when the GPADR is read. The specification is not tested due to the asynchronous nature of the input and dependence on the state of the DSP core. It is guaranteed by design.
5. The output signals cannot toggle faster than 75 MHz.
6. Level-sensitive interrupts should be held low until the system determines (via the service routine) that the interrupt is acknowledged.

Figure 25 shows the signal behavior of the GPI/GPO pins.

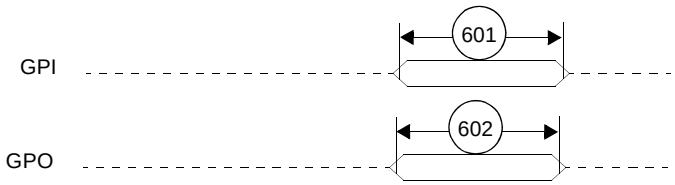

Figure 25. GPI/GPO Pin Timing

Because of an order from the United States International Trade Commission, BGA-packaged product lines and part numbers indicated here currently are not available from Freescale for import or sale in the United States prior to September 2010: MSC7116VF1000, MSC7116VM1000, MSC711XADS

2.5.13 JTAG Signals

Table 31. JTAG Timing

No.	Characteristics	All frequencies		Unit
		Min	Max	
700	TCK frequency of operation (1/($T_C \times 3$) **Note:** T_C = 1/CLOCK which is the period of the core clock. The TCK frequency must less than 1/3 of the core frequency with an absolute maximum limit of 40 MHz.	0.0	40.0	MHz
701	TCK cycle time	25.0	—	ns
702	TCK clock pulse width measured at $V_{M =}$ 1.6 V	11.0	—	ns
703	TCK rise and fall times	0.0	3.0	ns
704	Boundary scan input data set-up time	5.0	—	ns
705	Boundary scan input data hold time	14.0	—	ns
706	TCK low to output data valid	0.0	20.0	ns
707	TCK low to output high impedance	0.0	20.0	ns
708	TMS, TDI data set-up time	5.0	—	ns
709	TMS, TDI data hold time	14.0	—	ns
710	TCK low to TDO data valid	0.0	24.0	ns
711	TCK low to TDO high impedance	0.0	10.0	ns
712	$\overline{\text{TRST}}$ assert time	100.0	—	ns
Note:	All timings apply to OCE module data transfers as the OCE module uses the JTAG port as an interface.			

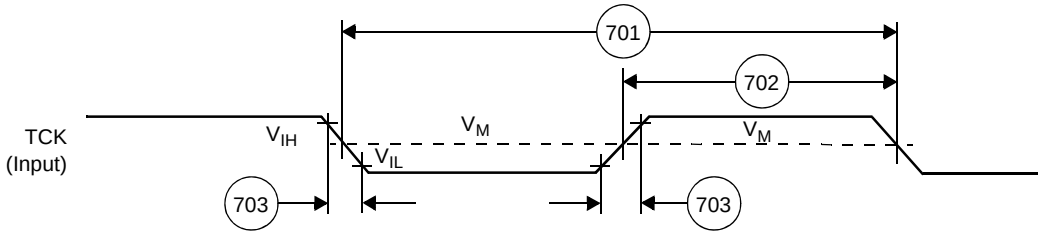

Figure 26. Test Clock Input Timing Diagram

Because of an order from the United States International Trade Commission, BGA-packaged product lines and part numbers indicated here currently are not available from Freescale for import or sale in the United States prior to September 2010: MSC7116VF1000, MSC7116VM1000, MSC711XADS

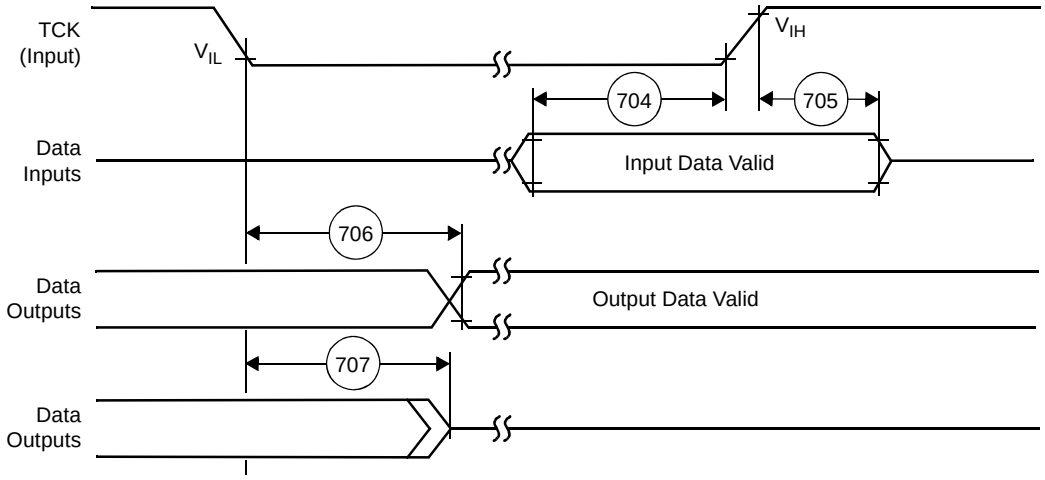

Figure 27. Boundary Scan (JTAG) Timing Diagram

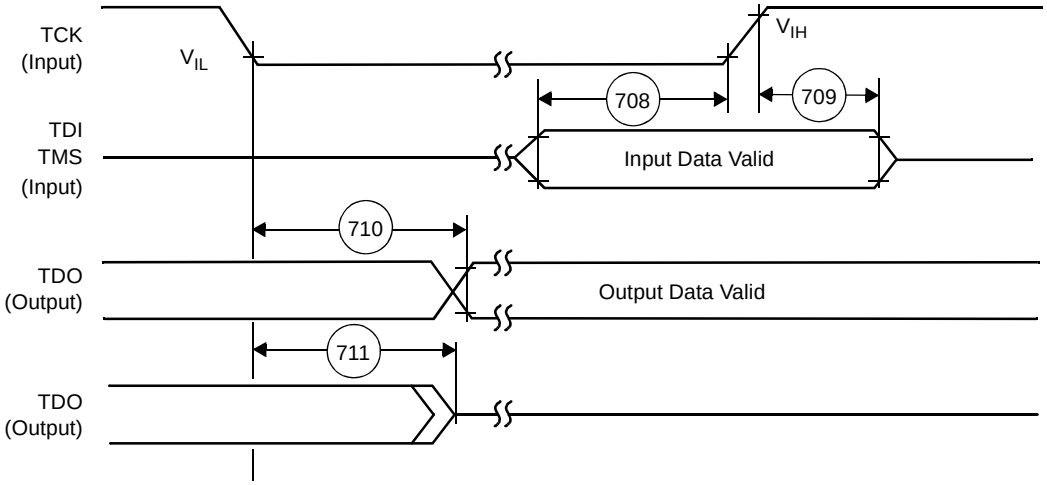

Figure 28. Test Access Port Timing Diagram

Figure 29. $\overline{\text{TRST}}$ Timing Diagram

Because of an order from the United States International Trade Commission, BGA-packaged product lines and part numbers indicated here currently are not available from Freescale for import or sale in the United States prior to September 2010: MSC7116VF1000, MSC7116VM1000, MSC711XADS

3 Hardware Design Considerations

This section described various areas to consider when incorporating the MSC7116 device into a system design.

3.1 Thermal Design Considerations

An estimation of the chip-junction temperature, T_J, in °C can be obtained from the following:

$$T_J = T_A + (R_{\theta JA} \times P_D) \qquad \textit{Eqn. 1}$$

where

T_A = ambient temperature near the package (°C)

$R_{\theta JA}$ = junction-to-ambient thermal resistance (°C/W)

$P_D = P_{INT} + P_{I/O}$ = power dissipation in the package (W)

$P_{INT} = I_{DD} \times V_{DD}$ = internal power dissipation (W)

$P_{I/O}$ = power dissipated from device on output pins (W)

The power dissipation values for the MSC7116 are listed in **Table 4**. The ambient temperature for the device is the air temperature in the immediate vicinity that would cool the device. The junction-to-ambient thermal resistances are JEDEC standard values that provide a quick and easy estimation of thermal performance. There are two values in common usage: the value determined on a single layer board and the value obtained on a board with two planes. The value that more closely approximates a specific application depends on the power dissipated by other components on the printed circuit board (PCB). The value obtained using a single layer board is appropriate for tightly packed PCB configurations. The value obtained using a board with internal planes is more appropriate for boards with low power dissipation (less than 0.02 W/cm^2 with natural convection) and well separated components. Based on an estimation of junction temperature using this technique, determine whether a more detailed thermal analysis is required. Standard thermal management techniques can be used to maintain the device thermal junction temperature below its maximum. If T_J appears to be too high, either lower the ambient temperature or the power dissipation of the chip.

You can verify the junction temperature by measuring the case temperature using a small diameter thermocouple (40 gauge is recommended) or an infrared temperature sensor on a spot on the device case. Use the following equation to determine T_J:

$$T_J = T_T + (\Psi_{JT} \times P_D) \qquad \textit{Eqn. 2}$$

where

T_T = thermocouple (or infrared) temperature on top of the package (°C)

Ψ_{JT} = thermal characterization parameter (°C/W)

P_D = power dissipation in the package (W)

Because of an order from the United States International Trade Commission, BGA-packaged product lines and part numbers indicated here currently are not available from Freescale for import or sale in the United States prior to September 2010: MSC7116VF1000, MSC7116VM1000, MSC711XADS

3.2 Power Supply Design Considerations

This section outlines the MSC7116 power considerations: power supply, power sequencing, power planes, decoupling, power supply filtering, and power consumption. It also presents a recommended power supply design and options for low-power consumption. For information on AC/DC electrical specifications and thermal characteristics, refer to **Section 2**.

3.2.1 Power Supply

The MSC7116 requires four input voltages, as shown in **Table 32**.

Table 32. MSC7116 Voltages

Voltage	Symbol	Value
Core	V_{DDC}	1.2 V
Memory	V_{DDM}	2.5 V
Reference	V_{REF}	1.25 V
I/O	V_{DDIO}	3.3 V

You should supply the MSC7116 core voltage via a variable switching supply or regulator to allow for compatibility with possible core voltage changes on future silicon revisions. The core voltage is supplied with 1.2 V (+5% and –10%) across V_{DDC} and GND and the I/O section is supplied with 3.3 V (± 10%) across V_{DDIO} and GND. The memory and reference voltages supply the DDR memory controller block. The memory voltage is supplied with 2.5 V across V_{DDM} and GND. The reference voltage is supplied across V_{REF} and GND and must be between $0.49 \times V_{DDM}$ and $0.51 \times V_{DDM}$. Refer to the JEDEC standard JESD8 (*Stub Series Terminated Logic for 2.5 Volts* (STTL_2)) for memory voltage supply requirements.

3.2.2 Power Sequencing

One consequence of multiple power supplies is that the voltage rails ramp up at different rates when power is initially applied. The rates depend on the power supply, the type of load on each power supply, and the way different voltages are derived. It is extremely important to observe the power up and power down sequences at the board level to avoid latch-up, forward biasing of ESD devices, and excessive currents, which all lead to severe device damage.

Note: There are five possible power-up/power-down sequence cases. The first four cases listed in the following sections are recommended for new designs. The fifth case is not recommended for new designs and must be carefully evaluated for current spike risks based on actual information for the specific application.

Because of an order from the United States International Trade Commission, BGA-packaged product lines and part numbers indicated here currently are not available from Freescale for import or sale in the United States prior to September 2010: MSC7116VF1000, MSC7116VM1000, MSC711XADS

3.2.2.1 Case 1

The power-up sequence is as follows:

1. Turn on the V_{DDIO} (3.3 V) supply first.
2. Turn on the V_{DDC} (1.2 V) supply second.
3. Turn on the V_{DDM} (2.5 V) supply third.
4. Turn on the V_{REF} (1.25 V) supply fourth (last).

The power-down sequence is as follows:

1. Turn off the V_{REF} (1.25 V) supply first.
2. Turn off the V_{DDM} (2.5 V) supply second.
3. Turn off the V_{DDC} (1.2 V) supply third.
4. Turn of the V_{DDIO} (3.3 V) supply fourth (last).

Use the following guidelines:

- Make sure that the time interval between the ramp-down of V_{DDIO} and V_{DDC} is less than 10 ms.
- Make sure that the time interval between the ramp-up or ramp-down for V_{DDC} and V_{DDM} is less than 10 ms for power-up and power-down.
- Refer to **Figure 30** for relative timing for power sequencing case 1.

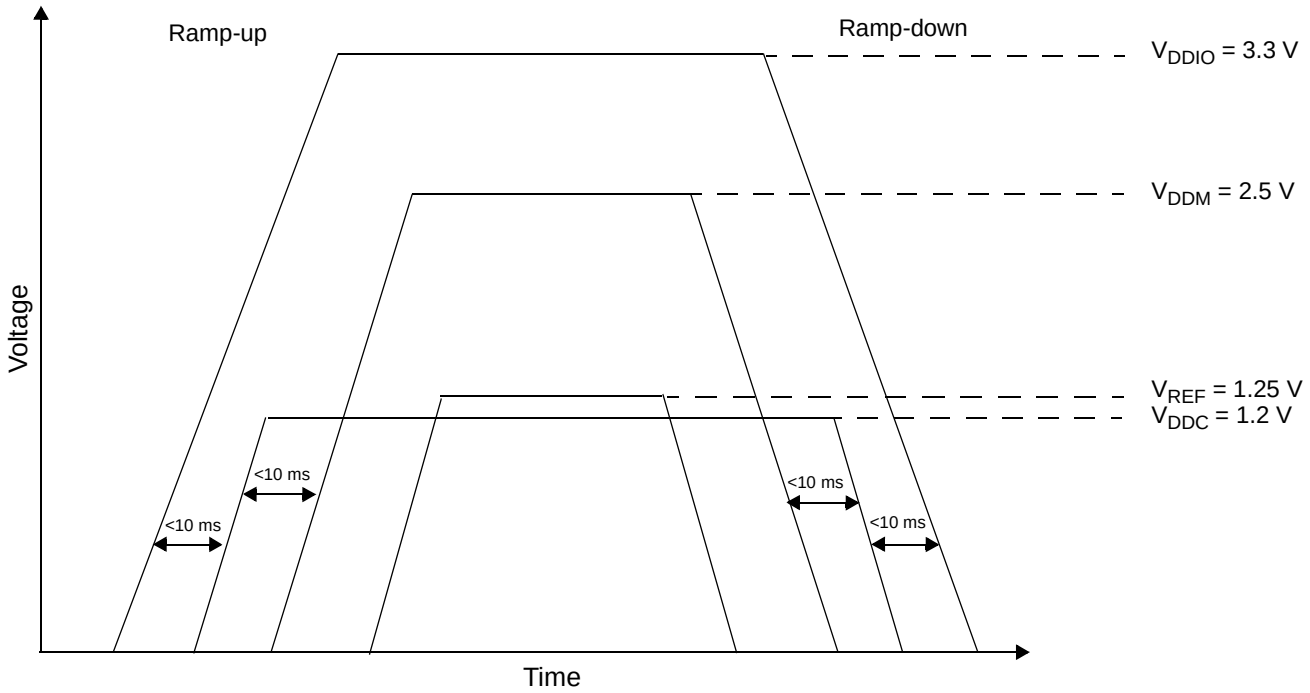

Figure 30. Voltage Sequencing Case 1

Because of an order from the United States International Trade Commission, BGA-packaged product lines and part numbers indicated here currently are not available from Freescale for import or sale in the United States prior to September 2010: MSC7116VF1000, MSC7116VM1000, MSC711XADS

3.2.2.2 Case 2

The power-up sequence is as follows:

1. Turn on the V_{DDIO} (3.3 V) supply first.
2. Turn on the V_{DDC} (1.2 V) and V_{DDM} (2.5 V) supplies simultaneously (second).
3. Turn on the V_{REF} (1.25 V) supply last (third).

Note: Make sure that the time interval between the ramp-up of V_{DDIO} and V_{DDC}/V_{DDM} is less than 10 ms.

The power-down sequence is as follows:

1. Turn off the V_{REF} (1.25 V) supply first.
2. Turn off the V_{DDM} (2.5 V) supply second.
3. Turn off the V_{DDC} (1.2 V) supply third.
4. Turn of the V_{DDIO} (3.3 V) supply fourth (last).

Use the following guidelines:

- Make sure that the time interval between the ramp-down for V_{DDIO} and V_{DDC} is less than 10 ms.
- Make sure that the time interval between the ramp-up or ramp-down for V_{DDC} and V_{DDM} is less than 10 ms for power-up and power-down.
- Refer to **Figure 31** for relative timing for Case 2.

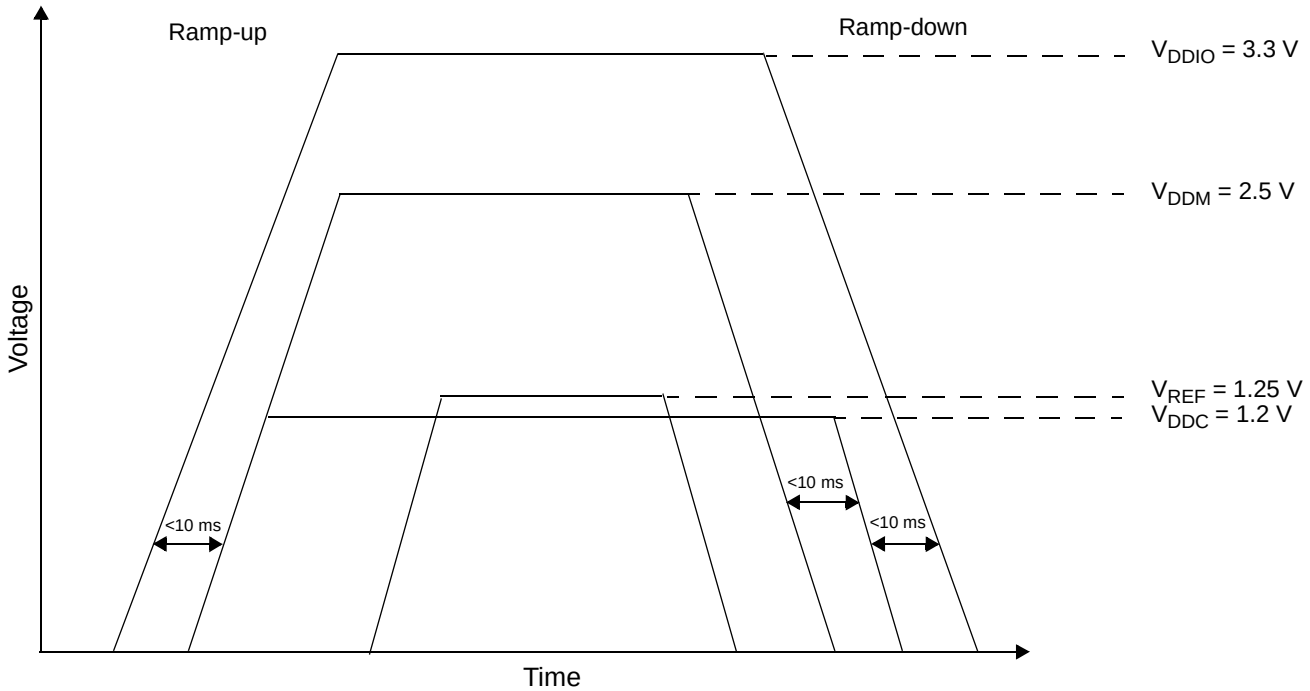

Figure 31. Voltage Sequencing Case 2

Because of an order from the United States International Trade Commission, BGA-packaged product lines and part numbers indicated here currently are not available from Freescale for import or sale in the United States prior to September 2010: MSC7116VF1000, MSC7116VM1000, MSC711XADS

3.2.2.3 Case 3

The power-up sequence is as follows:

1. Turn on the V_{DDIO} (3.3 V) supply first.
2. Turn on the V_{DDC} (1.2 V) supply second.
3. Turn on the V_{DDM} (2.5 V) and V_{REF} (1.25 V) supplies simultaneously (third).

Note: Make sure that the time interval between the ramp-up of V_{DDIO} and V_{DDC} is less than 10 ms.

The power-down sequence is as follows:

1. Turn off the V_{DDM} (2.5 V) and V_{REF} (1.25 V) supplies simultaneously (first).
2. Turn off the V_{DDC} (1.2 V) supply second.
3. Turn of the V_{DDIO} (3.3 V) supply third (last).

Use the following guidelines:

- Make sure that the time interval between the ramp-down for V_{DDIO} and V_{DDC} is less than 10 ms.
- Make sure that the time interval between the ramp-up or ramp-down time for V_{DDC} and V_{DDM} is less than 10 ms for power-up and power-down.
- Refer to **Figure 32** for relative timing for Case 3.

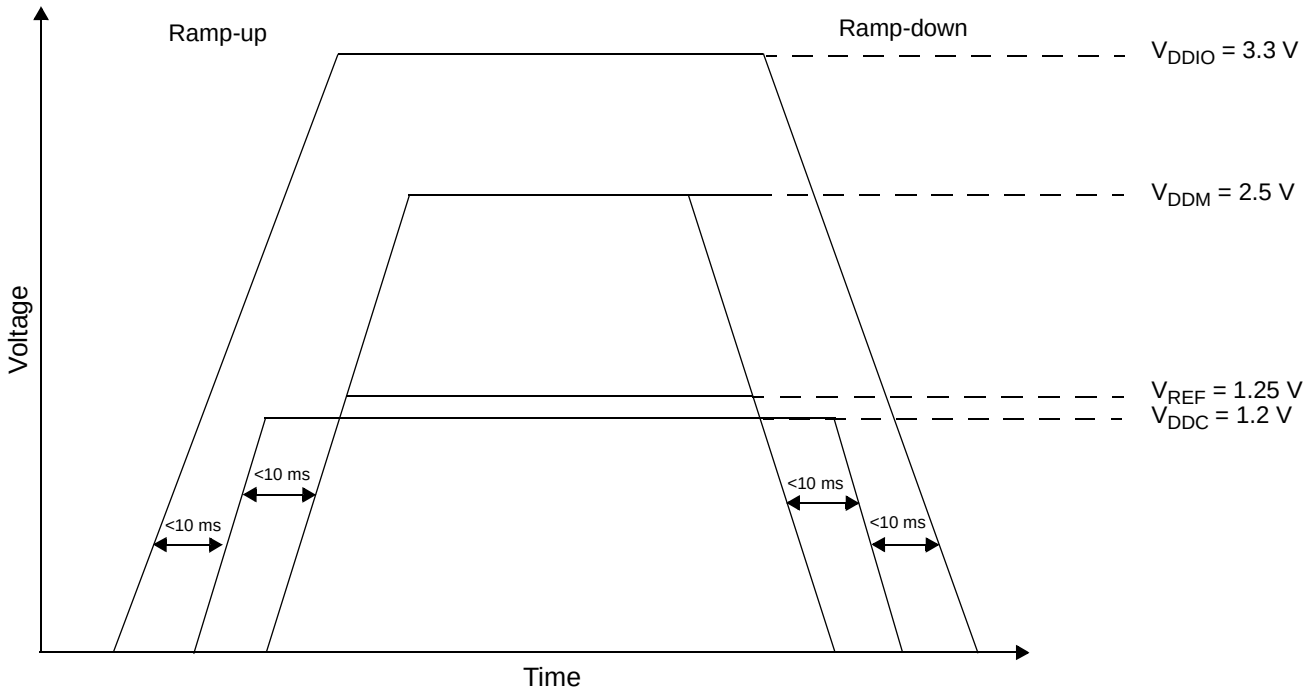

Figure 32. Voltage Sequencing Case 3

Because of an order from the United States International Trade Commission, BGA-packaged product lines and part numbers indicated here currently are not available from Freescale for import or sale in the United States prior to September 2010: MSC7116VF1000, MSC7116VM1000, MSC711XADS

3.2.2.4 Case 4

The power-up sequence is as follows:

1. Turn on the V_{DDIO} (3.3 V) supply first.
2. Turn on the V_{DDC} (1.2 V), V_{DDM} (2.5 V), and V_{REF} (1.25 V) supplies simultaneously (second).

Note: Make sure that the time interval between the ramp-up of V_{DDIO} and V_{DDC} is less than 10 ms.

The power-down sequence is as follows:

1. Turn off the V_{DDC} (1.2 V), V_{REF} (1.25 V), and V_{DDM} (2.5 V) supplies simultaneously (first).
2. Turn of the V_{DDIO} (3.3 V) supply last.

Use the following guidelines:

- Make sure that the time interval between the ramp-up or ramp-down time for V_{DDC} and V_{DDM} is less than 10 ms for power-up and power-down.
- Refer to **Figure 33** for relative timing for Case 4.

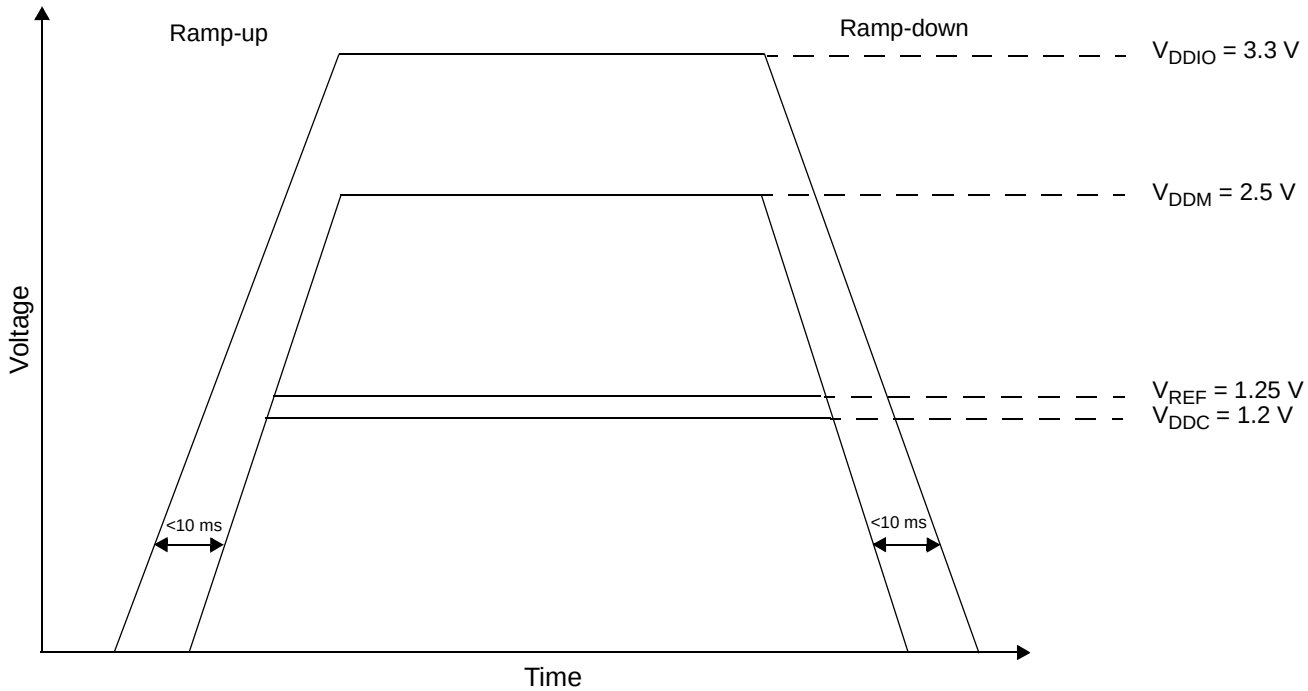

Figure 33. Voltage Sequencing Case 4

Because of an order from the United States International Trade Commission, BGA-packaged product lines and part numbers indicated here currently are not available from Freescale for import or sale in the United States prior to September 2010: MSC7116VF1000, MSC7116VM1000, MSC711XADS

3.2.2.5 Case 5 (not recommended for new designs)

The power-up sequence is as follows:

1. Turn on the V_{DDIO} (3.3 V) supply first.
2. Turn on the V_{DDM} (2.5 V) supply second.
3. Turn on the V_{DDC} (1.2 V) supply third.
4. Turn on the V_{REF} (1.25 V) supply fourth (last).

Note: Make sure that the time interval between the ramp-up of V_{DDIO} and V_{DDM} is less than 10 ms.

The power-down sequence is as follows:

1. Turn off the V_{REF} (1.25 V) supply first.
2. Turn off the V_{DDC} (1.2 V) supply second.
3. Turn off the V_{DDM} (2.5 V) supply third.
4. Turn of the V_{DDIO} (3.3 V) supply fourth (last).

Use the following guidelines:

- Make sure that the time interval between the ramp-down of V_{DDIO} and V_{DDM} is less than 10 ms.
- Make sure that the time interval between the ramp-up or ramp-down for V_{DDC} and V_{DDM} is less than 2 ms for power-up and power-down.
- Refer to **Figure 34** for relative timing for power sequencing case 5.

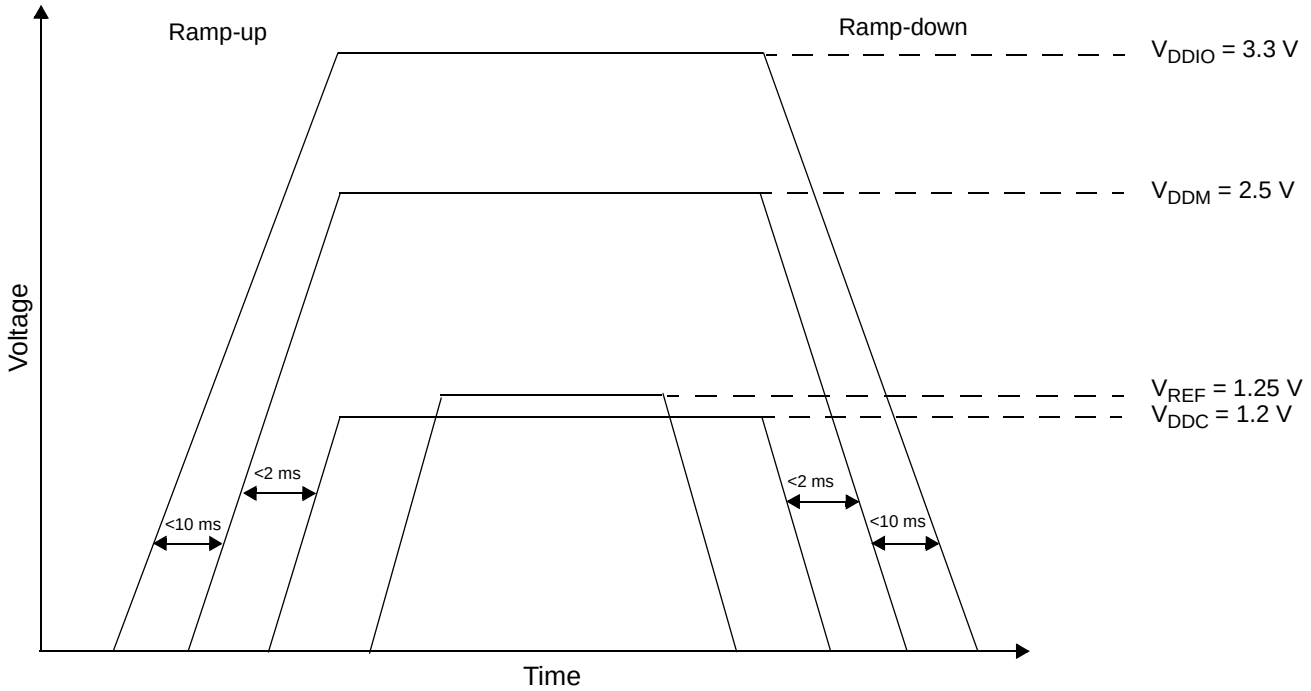

Figure 34. Voltage Sequencing Case 5

Note: Cases 1, 2, 3, and 4 are recommended for system design. Designs that use Case 5 may have large current spikes on the V_{DDM} supply at startup and is not recommended for most designs. If a design uses case 5, it must accommodate the potential current spikes. Verify risks related to current spikes using actual information for the specific application.

Because of an order from the United States International Trade Commission, BGA-packaged product lines and part numbers indicated here currently are not available from Freescale for import or sale in the United States prior to September 2010: MSC7116VF1000, MSC7116VM1000, MSC711XADS

3.2.3 Power Planes

Each power supply pin (V_{DDC}, $V_{DDM,}$ and V_{DDIO}) should have a low-impedance path to the board power supply. Each GND pin should be provided with a low-impedance path to ground. The power supply pins drive distinct groups of logic on the device. The MSC7116 V_{DDC} power supply pins should be bypassed to ground using decoupling capacitors. The capacitor leads and associated printed circuit traces connecting to device power pins and GND should be kept to less than half an inch per capacitor lead. A minimum four-layer board that employs two inner layers as power and GND planes is recommended. See **Section 3.5** for DDR Controller power guidelines.

3.2.4 Decoupling

Both the I/O voltage and core voltage should be decoupled for switching noise. For I/O decoupling, use standard capacitor values of 0.01 µF for every two to three voltage pins. For core voltage decoupling, use two levels of decoupling. The first level should consist of a 0.01 µF high frequency capacitor with low effective series resistance (ESR) and effective series inductance (ESL) for every two to three voltage pins. The second decoupling level should consist of two bulk/tantalum decoupling capacitors, one 10 µF and one 47 µF, (with low ESR and ESL) mounted as closely as possible to the MSC7116 voltage pins. Additionally, the maximum drop between the power supply and the DSP device should be 15 mV at 1 A.

3.2.5 PLL Power Supply Filtering

The MSC7116 V_{DDPLL} power signal provides power to the clock generation PLL. To ensure stability of the internal clock, the power supplied to this pin should be filtered with capacitors that have low and high frequency filtering characteristics. V_{DDPLL} can be connected to V_{DDC} through a 2 Ω resistor. V_{SSPLL} can be tied directly to the GND plane. A circuit similar to the one shown in **Figure 35** is recommended. The PLL loop filter should be placed as closely as possible to the V_{DDPLL} pin (which are located on the outside edge of the silicon package) to minimize noise coupled from nearby circuits.The 0.01 µF capacitor should be closest to V_{DDPLL}, followed by the 0.1 µF capacitor, the 10 µF capacitor, and finally the 2-Ω resistor to V_{DDC}. These traces should be kept short.

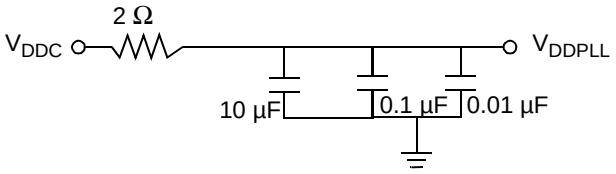

Figure 35. PLL Power Supply Filter Circuits

3.2.6 Power Consumption

You can reduce power consumption in your design by controlling the power consumption of the following regions of the device:

- *Extended core.* Use the SC1400 Stop and Wait modes by issuing a **stop** or **wait** instruction.
- *Clock synthesis module.* Disable the PLL, timer, watchdog, or DDR clocks or disable the CLKO pin.
- *AHB subsystem.* Freeze or shut down the AHB subsystem using the GPSCTL[XBR_HRQ] bit.
- *Peripheral subsystem.* Halt the individual on-device peripherals such as the DDR memory controller, Ethernet MAC, HDI16, TDM, UART, I^2C, and timer modules.

For details, see the “Clocks and Power Management” chapter of the *MSC711x Reference Manual*.

Because of an order from the United States International Trade Commission, BGA-packaged product lines and part numbers indicated here currently are not available from Freescale for import or sale in the United States prior to September 2010: MSC7116VF1000, MSC7116VM1000, MSC711XADS

3.2.7 Power Supply Design

One of the most common ways to derive power is to use either a simple fixed or adjustable linear regulator. For the system I/O voltage supply, a simple fixed 3.3 V supply can be used. However, a separate adjustable linear regulator supply for the core voltage V_{DDC} should be implemented. For the memory power supply, regulators are available that take care of all DDR power requirements.

Table 33. Recommended Power Supply Ratings

Supply	Symbol	Nominal Voltage	Current Rating
Core	V_{DDC}	1.2 V	1.5 A per device
Memory	V_{DDM}	2.5 V	0.5 A per device
Reference	V_{REF}	1.25 V	10 µA per device
I/O	V_{DDIO}	3.3 V	1.0 A per device

3.3 Estimated Power Usage Calculations

The following equations permit estimated power usage to be calculated for individual design conditions. Overall power is derived by totaling the power used by each of the major subsystems:

$$P_{TOTAL} = P_{CORE} + P_{PERIPHERALS} + P_{DDRIO} + P_{IO} + P_{LEAKAGE} \qquad \textit{Eqn. 3}$$

This equation combines dynamic and static power. Dynamic power is determined using the generic equation:

$$C \times V^2 \times F \times 10^{-3}\ mW \qquad \textit{Eqn. 4}$$

where,

C = load capacitance in pF

V = peak-to-peak voltage swing in V

F = frequency in MHz

3.3.1 Core Power

Estimation of core power is straightforward. It uses the generic dynamic power equation and assumes that the core load capacitance is 750 pF, core voltage swing is 1.2 V, and the core frequency is 266 MHz. This yields:

$$P_{CORE} = 750\ pF \times (1.2\ V)^2 \times 266\ MHz \times 10^{-3} = 287\ mW \qquad \textit{Eqn. 5}$$

This equation allows for adjustments to voltage and frequency if necessary.

Because of an order from the United States International Trade Commission, BGA-packaged product lines and part numbers indicated here currently are not available from Freescale for import or sale in the United States prior to September 2010: MSC7116VF1000, MSC7116VM1000, MSC711XADS

3.3.2 Peripheral Power

Peripherals include the DDR memory controller, Ethernet controller, DMA controller, HDI16, TDM, UART, timers, GPIOs, and the I^2C module. Basic power consumption by each module is assumed to be the same and is computed by using the following equation which assumes an effective load of 20 pF, core voltage swing of 1.2 V, and a switching frequency of 133 MHz. This yields:

$$P_{PERIPHERAL} = 20\ pF \times (1.2\ V)^2 \times 133\ MHz \times 10^{-3} = 3.83\ mW\ per\ peripheral \qquad Eqn.\ 6$$

Multiply this value by the number of peripherals used in the application to compute the total peripheral power consumption.

3.3.3 External Memory Power

Estimation of power consumption by the DDR memory system is complex. It varies based on overall system signal line usage, termination and load levels, and switching rates. Because the DDR memory includes terminations external to the MSC7116 device, the 2.5 V power source provides the power for the termination, which is a static value of 16 mA per signal driven high. The dynamic power is computed, however, using a differential voltage swing of ±0.200 V, yielding a peak-to-peak swing of 0.4 V. The equations for computing the DDR power are:

$$P_{DDRIO} = P_{STATIC} + P_{DYNAMIC} \qquad Eqn.\ 7$$

$$P_{STATIC} = (unused\ pins \times \%\ driven\ high) \times 16\ mA \times 2.5\ V \qquad Eqn.\ 8$$

$$P_{DYNAMIC} = (pin\ activity\ value) \times 20\ pF \times (0.4\ V)^2 \times 266\ MHz \times 10^{-3}\ mW \qquad Eqn.\ 9$$

$$pin\ activity\ value = (active\ data\ lines \times \%\ activity \times \%\ data\ switching) + (active\ address\ lines \times \%\ activity) \qquad Eqn.\ 10$$

As an example, assume the following:

unused pins = 16 (DDR uses 16-pin mode)
% driven high = 50%
active data lines = 16
% activity = 60%
% data switching = 50%
active address lines = 3

In this example, the DDR memory power consumption is:

$$P_{DDRIO} = ((16 \times 0.5) \times 16 \times 2.5) + (((16 \times 0.6 \times 0.5) + (3 \times 0.6)) \times 20 \times (0.4)^2 \times 266 \times 10^{-3}) = 326.3\ mW \qquad Eqn.\ 11$$

3.3.4 External I/O Power

The estimation of the I/O power is similar to the computation of the peripheral power estimates. The power consumption per signal line is computed assuming a maximum load of 20 pF, a voltage swing of 3.3 V, and a switching frequency of 33 MHz, which yields:

$$P_{IO} = 20\ pF \times (3.3\ V)^2 \times 33\ MHz \times 10^{-3} = 7.19\ mW\ per\ I/O\ line \qquad Eqn.\ 12$$

Multiply this number by the number of I/O signal lines used in the application design to compute the total I/O power.

Note: The signal loading depends on the board routing. For systems using a single DDR device, the load could be as low as 7 pF.

3.3.5 Leakage Power

The leakage power is for all power supplies combined at a specific temperature. The value is temperature dependent. The observed leakage value at room temperature is 64 mW.

Because of an order from the United States International Trade Commission, BGA-packaged product lines and part numbers indicated here currently are not available from Freescale for import or sale in the United States prior to September 2010: MSC7116VF1000, MSC7116VM1000, MSC711XADS

3.3.6 Example Total Power Consumption

Using the examples in this section and assuming four peripherals and 10 I/O lines active, a total power consumption value is estimated as the following:

$$P_{TOTAL} = 287 + (4 \times 3.83) + 326.3 + (10 \times 7.19) + 64 = 764.52\ mW \qquad \text{Eqn. 13}$$

3.4 Reset and Boot

This section describes the recommendations for configuring the MSC7116 at reset and boot.

3.4.1 Reset Circuit

$\overline{\text{HRESET}}$ is a bidirectional signal and, if driven as an input, should be driven with an open collector or open-drain device. For an open-drain output such as $\overline{\text{HRESET}}$, take care when driving many buffers that implement input bus-hold circuitry. The bus-hold currents can cause enough voltage drop across the pull-up resistor to change the logic level to low. Either a smaller value of pull-up or less current loading from the bus-hold drivers overcomes this issue. To avoid exceeding the MSC7116 output current, the pull-up value should not be too small (a 1 KΩ pull-up resistor is used in the MSC711xADS reference design).

3.4.2 Reset Configuration Pins

Table 34 shows the MSC7116 reset configuration signals. These signals are sampled at the deassertion (rising edge) of $\overline{\text{PORESET}}$. For details, refer to the Reset chapter of the *MSC711x Reference Manual*.

Table 34. Reset Configuration Signals

Signal	Description	Settings
BM[3–0]	Determines boot mode.	See **Table 35** for details.
SWTE	Determines watchdog functionality.	0 Watchdog timer disabled. 1 Watchdog timer enabled.
HDSP	Configures HDI16 strobe polarity.	0 Host Data strobes active low. 1 Host Data strobes active high.
H8BIT	Configures HDI16 operation mode.	0 HDI16 port configured for 16-bit operation. 1 HDI16 port configured for 8-bit operation.

Because of an order from the United States International Trade Commission, BGA-packaged product lines and part numbers indicated here currently are not available from Freescale for import or sale in the United States prior to September 2010: MSC7116VF1000, MSC7116VM1000, MSC711XADS

Table 35. Boot Mode Source Selection

BM[3–0]	Boot Port	Input Clock Frequency	Clock Divide	PLL	CKSEL	RNG Bit	Core Clock Frequency	Comments
HDI Boot Modes								
0000	HDI16	< F_{max}	N/A	N/A	00	0	< F_{max}	Not clocked by the PLL. Can boot as 8- or 16-bit HDI.
0101	HDI16	22.2-25 MHz	1	12	11	1	266–300 MHz	Can boot as 8- or 16-bit HDI.
0010	HDI16	25-33.3 MHz	2	32	01	1	200–266 MHz	
0111	HDI16	33-66 MHz	3	12	11	1	132–264 MHz	
0100	HDI16	44.3-50 MHz	2	12	11	1	266–300 MHz	
SPI Boot Modes - Using HA3, HCS2, BM3, BM2 Pins								
1000	SPI (SW)	< F_{max}	N/A	N/A	00	0	< F_{max}	The boot program automatically determines whether EEPROM or Flash memory.
1001	SPI (SW)	15.6-25 MHz	1	17	11	0	133–212.5 MHz	
1010	SPI (SW)	33-50 MHz	2	16	11	0	132–200 MHz	
1011	SPI (SW)	44.3-75 MHz	3	18	11	0	133–225 MHz	
SPI Boot Modes - Using URXD, UTXD, SCL, SDA Pins								
1100	SPI (SW)	< F_{max}	N/A	N/A	00	0	< F_{max}	Boots through different set of pins.
I^2C Boot Modes								
0001	I^2C	< 100 MHz	N/A	N/A	00	0	< 100 MHz	Not clocked by the PLL. I^2C is limited to a maximum bit rate of 400 Kbps. With a clock divider of 128, this limits the maximum input clock frequency to 100 MHz.
Reserved								
0011	Reserved	—	—	—	—	—	—	—
0110	Reserved	—	—	—	—	—	—	—
1101	Reserved	—	—	—	—	—	—	—
1110	Reserved	—	—	—	—	—	—	—
1111	Reserved	—	—	—	—	—	—	—

Notes:
1. The clock divider determines the value used in the clock module CLKCTRL[PLLDVF] field.
2. The clock multiplier determines the value used in the clock module CLKCTRL[PLLMLTF] field.
3. F_{max} is determined by the maximum frequency of the peripheral and of the SC1400 core as specified in the data sheet.

3.4.3 Boot

After a power-on reset, the PLL is bypassed and the device is directly clocked from the CLKIN pin. Thus, the device operates slowly during the boot process. After the boot program is loaded, it can enable the PLL and start the device operating at a higher speed. The MSC7116 can boot from an external host through the HDI16 or download a user program through the I^2C port. The boot operating mode is set by configuring the BM[0–3] signals sampled at the rising edge of $\overline{\text{PORESET}}$, as shown in **Table 35**. See the *MSC711x Reference Manual* for details of boot program operation.

3.4.3.1 HDI16 Boot

If the MSC7116 device boots from an external host through the HDI16, the port is configured as follows:

- Operate in Non-DMA mode.
- Operate in polled mode on the device side.
- Operate in polled mode on the external host side.
- External host must write four 16-bit values at a time with the first word as the most significant and the fourth word as the least significant.

Because of an order from the United States International Trade Commission, BGA-packaged product lines and part numbers indicated here currently are not available from Freescale for import or sale in the United States prior to September 2010: MSC7116VF1000, MSC7116VM1000, MSC711XADS

When booting from a power-on reset, the HDI16 is additionally configurable as follows:

- 8- or 16-bit mode as specified by the H8BIT pin.
- Data strobe as specified by the HDSP and HDDS pins.

These pins are sampled only on the deassertion of power-on reset. During a boot from a hard reset, the configuration of these pins is unaffected.

Note: When the HDI16 is used for booting or other purposes, bit 0 is the least significant bit and not the most significant bit as for other DSP products.

3.4.3.2 I^2C Boot

When the MSC7116 device is configured to boot from the I^2C port, the boot program configures the GPIO pins for I^2C operation. Then the MSC7116 device initiates accesses to the I^2C module, downloading data to the MSC7116 device. The I^2C interface is configured as follows:

- PLL is disabled and bypassed so that the I^2C module is clocked with the IPBus clock.
- I^2C interface operates in master mode and polling is used.
- EPROM operates in slave mode.
- Clock divider is set to 128.
- Address of slave during boot is 0xA0.

The IPBus clock is internally divided to generate the bit clock, as follows:

- CLKIN must be a maximum of 100 MHz
- PLL is bypassed.
- IPBus clock = CLKIN/2 is a maximum of 50 MHz.
- I^2C bit clock must be less than or equal to:
  - IPBus clock/I^2C clock divider
  - 50 MHz (max)/128
  - 390.6 KHz

This satisfies the maximum clock rate requirement of 400 kbps for the I^2C interface. For details on the boot procedure, see the “Boot Program” chapter of the *MSC711x Reference Manual*.

3.4.3.3 SPI Boot

When the MSC7116 device is configured to boot from the SPI port, the boot program configures the GPIO pins for SPI operation. Then the MSC7116 device initiates accesses to the SPI module, downloading data to the MSC7116 device. When the SPI routines run in the boot ROM, the MSC7116 is always configured as the SPI master. Booting through the SPI is supported for serial EEPROM devices and serial Flash devices. When a READ_ID instruction is issued to the serial memory device and the device returns a value of 0x00 or 0xFF, the routines for accessing a serial EEPROM are used, at a maximum frequency of 4 Mbps. Otherwise, the routines for accessing a serial Flash are used, and they can run at faster speeds. Booting is performed through one of two sets of pins:

- Main set: BM[2–3], HA3, and HCS2, which allow use of the PLL.
- Alternate set: UTXD, URXD, SDA, and SCL, which cannot be used with the PLL.

In either configuration, an error during SPI boot is flagged on the EVNT3 pin. For details on the boot procedure, see the “Boot Program” chapter of the *MSC711x Reference Manual*.

Because of an order from the United States International Trade Commission, BGA-packaged product lines and part numbers indicated here currently are not available from Freescale for import or sale in the United States prior to September 2010: MSC7116VF1000, MSC7116VM1000, MSC711XADS

3.5 DDR Memory System Guidelines

MSC7116 devices contain a memory controller that provides a glueless interface to external double data rate (DDR) SDRAM memory modules with Class 2 Series Stub Termination Logic 2.5 V (SSTL_2). There are two termination techniques, as shown in Figure 36. Technique B is the most popular termination technique.

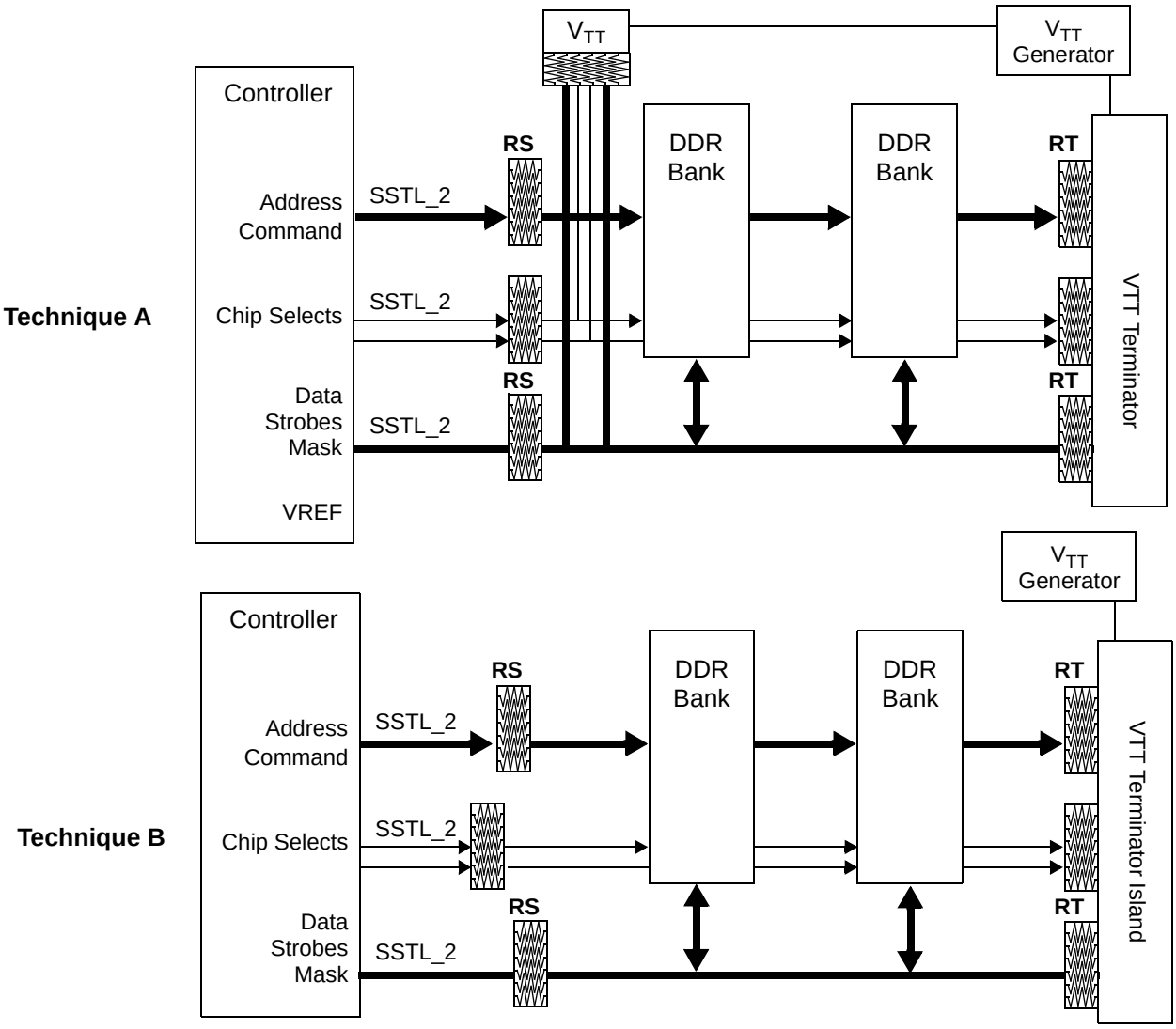

Figure 36. SSTL Termination Techniques

Figure 37 illustrates the power wattage for the resistors. Typical values for the resistors are as follows:

- RS = 22 Ω
- RT = 24 Ω

Because of an order from the United States International Trade Commission, BGA-packaged product lines and part numbers indicated here currently are not available from Freescale for import or sale in the United States prior to September 2010: MSC7116VF1000, MSC7116VM1000, MSC711XADS

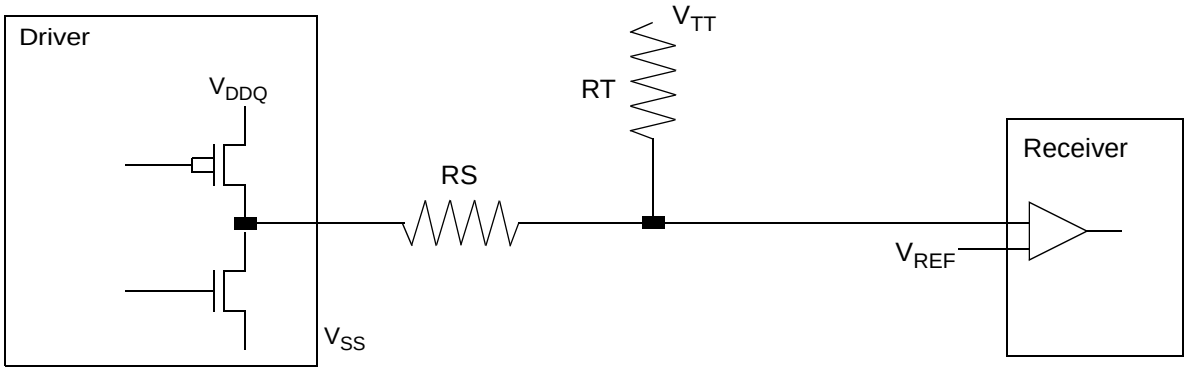

Figure 37. SSTL Power Value

3.5.1 V_{REF} and V_{TT} Design Constraints

V_{TT} and V_{REF} are isolated power supplies at the same voltage, with V_{TT} as a high current power source. This section outlines the voltage supply design needs and goals:

- Minimize the noise on both rails.
- V_{TT} must track variation in the V_{REF} DC offsets. Although they are isolated supplies, one possible solution is to use a single IC to generate both signals.
- Both references should have minimal drift over temperature and source supply.
- It is important to minimize the noise from coupling onto V_{REF} as follows:
  - Isolate V_{REF} and shield it with a ground trace.
  - Use 15–20 mm track.
  - Use 20–30 mm clearance between other traces for isolating.
  - Use the outer layer route when possible.
  - Use distributed decoupling to localize transient currents and return path and decouple with an inductance less than 3 nH.
- Max source/sink transient currents of up to 1.8 A for a 32-bit data bus.
- Use a wide island trace on the outer layer:
  - Place the island at the end of the bus.
  - Decouple both ends of the bus.
  - Use distributed decoupling across the island.
  - Place SSTL termination resistors inside the V_{TT} island and ensure a good, solid connection.
- Place the V_{TT} regulator as closely as possible to the termination island.
  - Reduce inductance and return path.
  - Tie current sense pin at the midpoint of the island.

3.5.2 Decoupling

The DDR decoupling considerations are as follows:

- DDR memory requires significantly more burst current than previous SDRAMs.
- In the worst case, up to 64 drivers may be switching states.
- Pay special attention and decouple discrete ICs per manufacturer guidelines.
- Leverage V_{TT} island topology to minimize the number of capacitors required to supply the burst current needs of the termination rail.
- See the Micron DesignLine publication entitled *Decoupling Capacitor Calculation for a DDR Memory Channel* (`http://download.micron.com/pdf/pubs/designline/3Q00dl1-4.pdf`).

Because of an order from the United States International Trade Commission, BGA-packaged product lines and part numbers indicated here currently are not available from Freescale for import or sale in the United States prior to September 2010: MSC7116VF1000, MSC7116VM1000, MSC711XADS

3.5.3 General Routing

The general routing considerations for the DDR are as follows:

- All DDR signals must be routed next to a solid reference:
  - For data, next to solid ground planes.
  - For address/command, power planes if necessary.
- All DDR signals must be impedance controlled. This is system dependent, but typical values are 50–60 ohm.
- Minimize other cross-talk opportunities. As possible, maintain at least a four times the trace width spacing between all DDR signals to non-DDR signals.
- Keep the number of vias to a minimum to eliminate additional stubs and capacitance.
- Signal group routing priorities are as follows:
  - DDR clocks.
  - Route MVTT/MVREF.
  - Data group.
  - Command/address.
- Minimize data bit jitter by trace matching.

3.5.4 Routing Clock Distribution

The DDR clock distribution considerations are as follows:

- DDR controller supports six clock pairs:
  - 2 DIMM modules.
  - Up to 36 discrete chips.
- For route traces as for any other differential signals:
  - Maintain proper difference pair spacing.
  - Match pair traces within 25 mm.
- Match all clock traces to within 100 mm.
- Keep all clocks equally loaded in the system.
- Route clocks on inner critical layers.

3.5.5 Data Routing

The DDR data routing considerations are as follows:

- Route each data group (8-bits data + DQS + DM) on the same layer. Avoid switching layers within a byte group.
- Take care to match trace lengths, which is extremely important.
- To make trace matching easier, let adjacent groups be routed on alternate critical layers.
- Pin swap bits within a byte group to facilitate routing (discrete case).
- Tight trace matching is recommended within the DDR data group. Keep each 8-bit datum and its DM signal within ± 25 mm of its respective strobe.
- Minimize lengths across the entire DDR channel:
  - Between all groups maintain a delta of no more than 500 mm.
  - Allows greater flexibility in the design for readjustments as needed.
- DDR data group separation:
  - If stack-up allows, keep DDR data groups away from the address and control nets.
  - Route address and control on separate critical layers.
  - If resistor networks (RNs) are used, attempt to keep data and command lines in separate packages.

Because of an order from the United States International Trade Commission, BGA-packaged product lines and part numbers indicated here currently are not available from Freescale for import or sale in the United States prior to September 2010: MSC7116VF1000, MSC7116VM1000, MSC711XADS

3.6 Connectivity Guidelines

This section summarizes the connections and special conditions, such as pull-up or pull-down resistors, for the MSC7116 device. Following are guidelines for signal groups and configuration settings:

- *Clock and reset signals*.
  - SWTE is used to configure the MSC7116 device and is sampled on the deassertion of $\overline{\text{PORESET}}$, so it should be tied to V_{DDC} or GND either directly or through pull-up or pull-down resistors until $\overline{\text{PORESET}}$ is deasserted. After $\overline{\text{PORESET}}$, this signal can be left floating.
  - BM[0–1] configure the MSC7116 device and are sampled until $\overline{\text{PORESET}}$ is deasserted, so they should be tied to V_{DDIO} or GND either directly or through pull-up or pull-down resistors.
  - $\overline{\text{HRESET}}$ should be pulled up.
- *Interrupt signals*. When used, $\overline{\text{IRQ}}$ pins must be pulled up.
- *HDI16 signals*.
  - When they are configured for open-drain, the $\overline{\text{HREQ}}$/HREQ or $\overline{\text{HTRQ}}$/HTRQ signals require a pull-up resistor. However, these pins are also sampled at power-on reset to determine the HDI16 boot mode and may need to be pulled down. When these pins must be pulled down on reset and pulled up otherwise, a buffer can be used with the $\overline{\text{HRESET}}$ signal as the enable.
  - When the device boots through the HDI16, the HDDS, HDSP and H8BIT pins should be pulled up or down, depending on the required boot mode settings.
- *Ethernet MAC/TDM2 signals*. The MDIO signal requires an external pull-up resistor.
- *I^2C signals*. The SCL and SDA signals, when programmed for I^2C, requires an external pull-up resistor.
- *General-purpose I/O (GPIO) signals*. An unused GPIO pin can be disconnected. After boot, program it as an output pin.
- Other signals.
  - The $\overline{\text{TEST0}}$ pin must be connected to ground.
  - The $\overline{\text{TPSEL}}$ pin should be pulled up to enable debug access via the EOnCE port and pulled down for boundary scan.
  - Pins labelled NO CONNECT (NC) must not be connected.
  - When a 16-pin double data rate (DDR) interface is used, the 16 unused data pins should be no connects (floating) if the used lines are terminated.
  - Do not connect DBREQ to DONE (as you would for the MSC8101 device). Connect DONE to one of the EVNT pins, and DBREQ to HRRQ.

4 Ordering Information

Consult a Freescale Semiconductor sales office or authorized distributor to determine product availability and place an order.

Part	Supply Voltage	Package Type	Pin Count	Core Frequency (MHz)	Solder Spheres	Order Number
MSC7116	1.2 V core 2.5 V memory 3.3 V I/O	Molded Array Process-Ball Grid Array (MAP-BGA)	400	266	Lead-free	MSC7116VM1000
					Lead-bearing	MSC7116VF1000

Because of an order from the United States International Trade Commission, BGA-packaged product lines and part numbers indicated here currently are not available from Freescale for import or sale in the United States prior to September 2010: MSC7116VF1000, MSC7116VM1000, MSC711XADS

5 Package Information

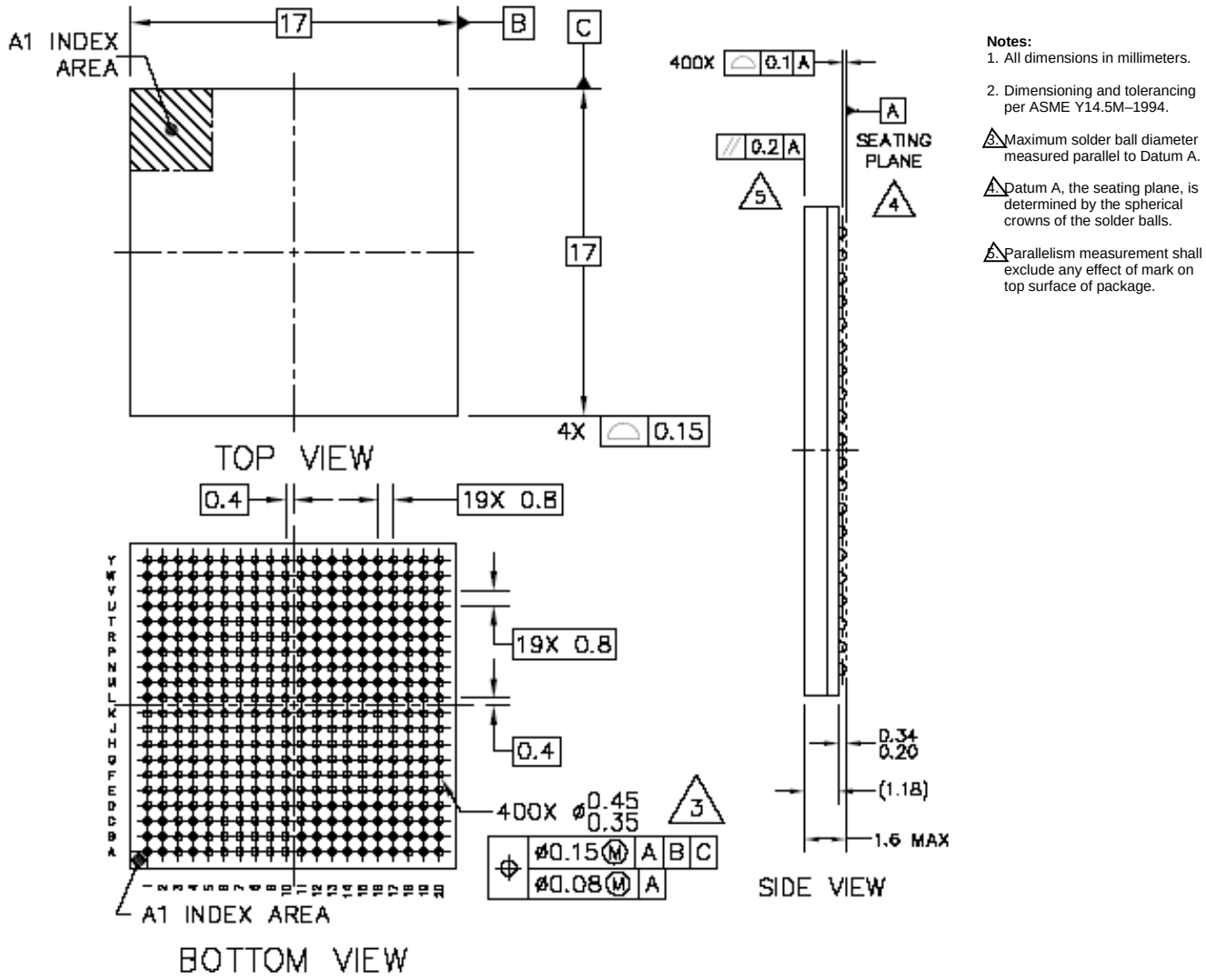

CASE 1568-01

Figure 38. MSC7116 Mechanical Information, 400-pin MAP-BGA Package

6 Product Documentation

- *MSC711x Reference Manual* (MSC711xRM). Includes functional descriptions of the extended cores and all the internal subsystems including configuration and programming information.
- *Application Notes*. Cover various programming topics related to the StarCore DSP core and the MSC7116 device.
- *SC140/SC1400 DSP Core Reference Manual*. Covers the SC140 and SC1400 core architecture, control registers, clock registers, program control, and instruction set.

Because of an order from the United States International Trade Commission, BGA-packaged product lines and part numbers indicated here currently are not available from Freescale for import or sale in the United States prior to September 2010: MSC7116VF1000, MSC7116VM1000, MSC711XADS

7 Revision History

Table 36 provides a revision history for this data sheet.

Table 36. Document Revision History

Revision	Date	Description
0	Apr 2004	• Initial public release.
1	May 2004	• Added ordering information and new package options.
2	Aug. 2004	• Updated clock parameter values. • Updated DDR timing specifications. • Updated I^2C timing specifications.
3	Sep. 2004	• Updated **Figures 1-2** and **1-2** to correct HDSP and DBREQ. • Corrected EE0 port reference. • Updated ball location for HDSP.
4	Jan. 2005	• Added signal HA3. • Updated absolute maximum ratings, DDR DRAM capacitance specifications, clock parameters, reset timing, and TDM timing. • Added note for timing reference for I^2C interface. • Expanded GPIO timing information. • Corrected pin T20 and K20 signal designation. • Corrected signal names to GPAO15 and $\overline{IRQ2}$. • Expanded design guidelines in Chapter 4.
5	Mar. 2005	• Updated features list. • Updated power specifications. • Changed CLKIN frequency range. • Added clock configuration information. • Updated JTAG timings.
6	Apr. 2005	• Added recommended power supply ratings and updated equations to estimate power consumption.
7	Oct. 2005	• Updated core and total power consumption examples.
8	Dec. 2005	• Added information about the new mask set 1M88B. Affected all sections.
9	Nov. 2006	• Updated arrows in Host DMA Writing Timing figure. • Updated boot overview in **Section 4.4.3**.
10	Apr. 2007	• Removed erroneous references to V_{CCSYN} and V_{CCSYN1}.
11	Jul. 2007	• Updated to new data sheet format. Reorganized and renumbered sections, figures, and tables. • Removed all references to obsolete mask set 1L44X and corresponding specification values. • Added a note to clarify the definition of TCK timing 700 in new **Table 31**. • Reworked reset and boot sections. • Expanded I^2C boot information and added SPI boot information. • Removed obsolete part numbers.
12	Aug 2007	• The power-up and power-down sequences described in **Section 3.2** starting on page 42 have been expanded to five possible design scenarios/cases. These cases replace the previously recommended power-up/power-down sequence recommendations. **Section 3.2** has been clarified by adding subsection headings.
13	Apr 2008	• Change the PLL filter resistor from 20 Ω to 2 Ω in **Section 3.2.5**.

Because of an order from the United States International Trade Commission, BGA-packaged product lines and part numbers indicated here currently are not available from Freescale for import or sale in the United States prior to September 2010: MSC7116VF1000, MSC7116VM1000, MSC711XADS

How to Reach Us:

Home Page:
www.freescale.com

Web Support:
http://www.freescale.com/support

USA/Europe or Locations Not Listed:
Freescale Semiconductor, Inc.
Technical Information Center, EL516
2100 East Elliot Road
Tempe, Arizona 85284
+1-800-521-6274 or
+1-480-768-2130
www.freescale.com/support

Europe, Middle East, and Africa:
Freescale Halbleiter Deutschland GmbH
Technical Information Center
Schatzbogen 7
81829 Muenchen, Germany
+44 1296 380 456 (English)
+46 8 52200080 (English)
+49 89 92103 559 (German)
+33 1 69 35 48 48 (French)
www.freescale.com/support

Japan:
Freescale Semiconductor Japan Ltd.
Headquarters
ARCO Tower 15F
1-8-1, Shimo-Meguro, Meguro-ku
Tokyo 153-0064
Japan
0120 191014 or
+81 3 5437 9125
support.japan@freescale.com

Asia/Pacific:
Freescale Semiconductor Hong Kong Ltd.
Technical Information Center
2 Dai King Street
Tai Po Industrial Estate
Tai Po, N.T., Hong Kong
+800 2666 8080
support.asia@freescale.com

For Literature Requests Only:
Freescale Semiconductor
Literature Distribution Center
P.O. Box 5405
Denver, Colorado 80217
+1-800 441-2447 or
+1-303-675-2140
Fax: +1-303-675-2150
LDCForFreescaleSemiconductor
@hibbertgroup.com

Information in this document is provided solely to enable system and software implementers to use Freescale Semiconductor products. There are no express or implied copyright licenses granted hereunder to design or fabricate any integrated circuits or integrated circuits based on the information in this document.

Freescale Semiconductor reserves the right to make changes without further notice to any products herein. Freescale Semiconductor makes no warranty, representation or guarantee regarding the suitability of its products for any particular purpose, nor does Freescale Semiconductor assume any liability arising out of the application or use of any product or circuit, and specifically disclaims any and all liability, including without limitation consequential or incidental damages. “Typical” parameters that may be provided in Freescale Semiconductor data sheets and/or specifications can and do vary in different applications and actual performance may vary over time. All operating parameters, including “Typicals”, must be validated for each customer application by customer’s technical experts. Freescale Semiconductor does not convey any license under its patent rights nor the rights of others. Freescale Semiconductor products are not designed, intended, or authorized for use as components in systems intended for surgical implant into the body, or other applications intended to support or sustain life, or for any other application in which the failure of the Freescale Semiconductor product could create a situation where personal injury or death may occur. Should Buyer purchase or use Freescale Semiconductor products for any such unintended or unauthorized application, Buyer shall indemnify and hold Freescale Semiconductor and its officers, employees, subsidiaries, affiliates, and distributors harmless against all claims, costs, damages, and expenses, and reasonable attorney fees arising out of, directly or indirectly, any claim of personal injury or death associated with such unintended or unauthorized use, even if such claim alleges that Freescale Semiconductor was negligent regarding the design or manufacture of the part.

RoHS-compliant and/or Pb-free versions of Freescale products have the functionality and electrical characteristics as their non-RoHS-compliant and/or non-Pb-free counterparts. For further information, see http://www.freescale.com or contact your Freescale sales representative.

For information on Freescale’s Environmental Products program, go to http://www.freescale.com/epp.

Freescale™, the Freescale logo, CodeWarrior, fieldBIST, and StarCore are trademarks of Freescale Semiconductor, Inc. IEEE, 802.3, 802.3u, 802.3x, and 802.3ac are trademarks of the Institute of Electrical and Electronics Engineers, Inc. (IEEE). All other product or service names are the property of their respective owners.

© Freescale Semiconductor, Inc. 2004, 2008. All rights reserved.

Document Number: MSC7116
Rev. 13
4/2008

Because of an order from the United States International Trade Commission, BGA-packaged product lines and part numbers indicated here currently are not available from Freescale for import or sale in the United States prior to September 2010: MSC7116VF1000, MSC7116VM1000, MSC711XADS

X-ON Electronics

Largest Supplier of Electrical and Electronic Components

Click to view similar products for Digital Signal Processors & Controllers - DSP, DSC ***category:***

Click to view products by NXP ***manufacturer:***

Other Similar products are found below :

ADSP-2189NBCAZ-320 ADSP-BF703BBCZ-3 dsPIC33EV64GM002-ISP DSPIC33FJ128MC510-I/PF MWPR1516CFM ADSP-2185MKCAZ-300 ADSP-BF701KBCZ-1 dsPIC33EV128GM002-ISP 646890G ADSP-21587KBCZ-4B ADSP-BF701KBCZ-2 ADSP-SC582KBCZ-4A ADSP-SC584BBCZ-4A ADSP-SC584KBCZ-3A ADSP-SC589KBCZ-4B ADSP-SC583KBCZ-4A ADSP-BF703BBCZ-4 0W888-002-XTP ADSP-BF705KBCZ-4 ADSP-BF705BBCZ-3 DSPIC33FJ64GP708-IPT ADBF707WCBCZ411 ADBF706WCCPZ411 ADSP-21584KBCZ-4A MC56F82746VLFR ADBF704WCCPZ311 ADBF702WCCPZ411 AD21571WCSWZ400 MC56F84550VLFR ADSP-SC571CSWZ-5 ADBF700WCCPZ211 ADSC572WCBCZ302 ADSC572WCBCZ402 ADSC572WCBCZ4202 AD21489WBCPZ402 ADSC572WCBCZ4200 ADSC572WCBCZ400 ADSC573WCBCZ400 ADSC573WCBCZ300 ADSC573WCBCZ500 ADSC571WCSWZ300 ADSC571WCSWZ500 ADSC571WCSWZ400 ADSP-21569KBCZ8 ADSP-21567KBCZ6 ADSP-21567KBCZ8 ADSP-21566KBCZ4 ADSP-21569KBCZ10 MC56F8323VFBE MC56F8366VFVE