PRODUCT NUMBER
SEE TABLE

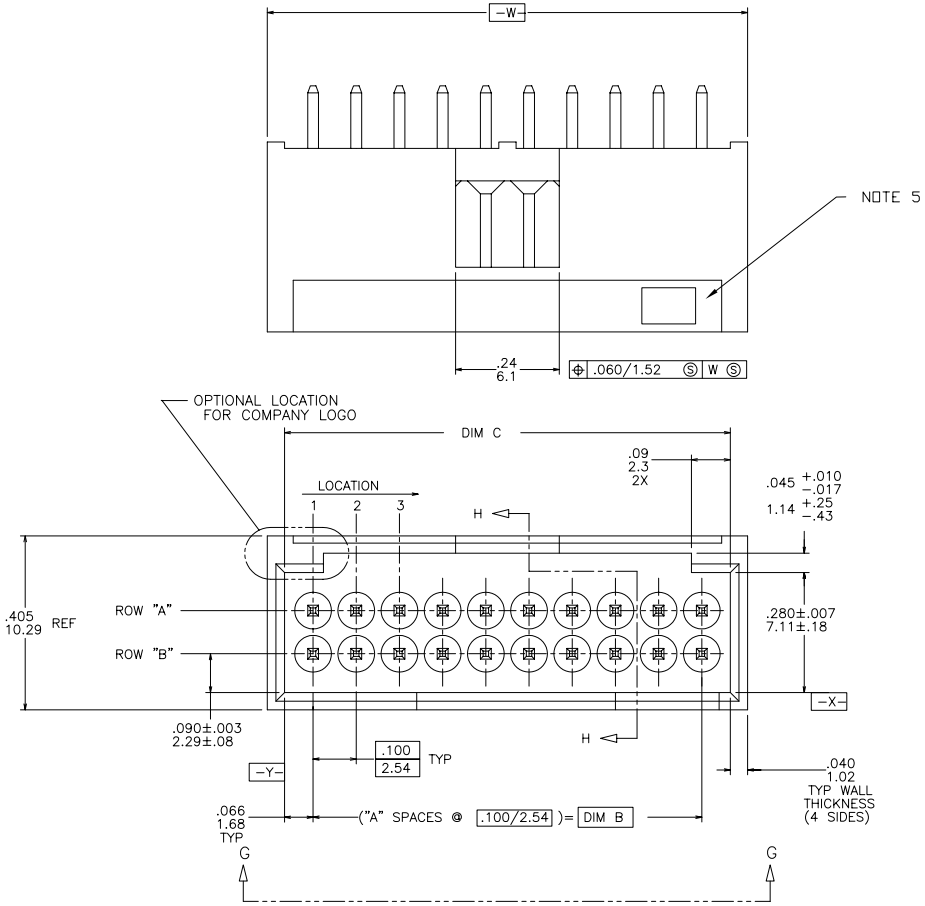

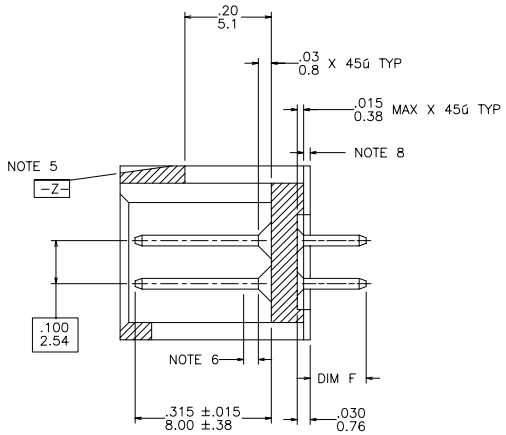

SECTION H-H

mat'l. code				surface	tolerance	projection	product family
NOTE 1 & 3				ISO 1302 √	ISO 406 ISO 1101		HEADER
ltr	ecn no	dr	date	tolerances unless otherwise specified			title
B	V00853	MRC	9/18/90	angles	linear .XX±.01/.X±0.3	INCH/MM	STRAIGHT HEADER FOR
C	V70775	SAR	6/2/97		.XXX±.005/.XX±0.13		ROUND WIRE RECEPTACLE
D	V71034	EPK	9/24/97	0°±2°	.XXXX±.0020/.XXX±0.051	scale 2.5:1	
E	V01576	MDF	7/5/00	dr	M. CORNMAN 9/18/90		dwg no sheet 1 of 6 size
F	M05-0167	ERE	7/23/05	engr	M. LEACH 9/18/90		68664 A3
G	M07-0116	AGS	2/24/07	chr	M. LEACH 9/18/90		
H	N07-0150	MHT	8/01/07	appd	M. LEACH 9/18/90		type Product Customer Drawing

sheet index	revision	H	H	H	H	H	H
	sheet	1	2	3	4	5	6

form: A3

FCIconnect.com
Copyright FCI

PDM: Rev:H STATUS: Released Printed: Oct 13, 2010

PRODUCT NO.
SEE TABLE

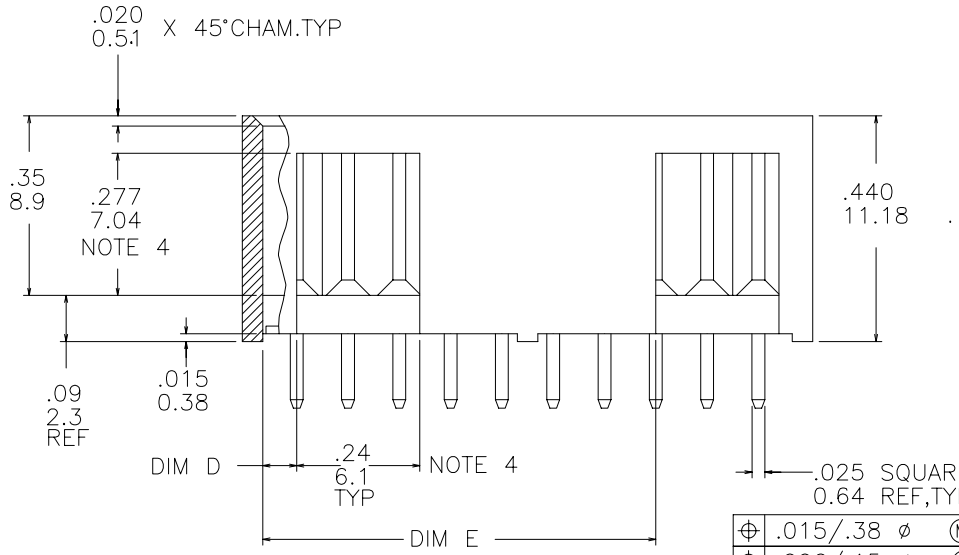

⌖	.015/.38 ø Ⓜ	X Ⓜ	Y Ⓜ	AT TIPS,TYP
⌖	.006/.15 ø Ⓜ	X Ⓜ	Y Ⓜ	AT BASE,TYP

VIEW G–G

NOTES:

1. TERMINAL MATERIAL: 3/4 HARD PHOS. BRONZE ALLOY, UNS–C51000.
2. TERMINAL PLATING: 30u"/0.76u Au OR GXT OVER 50u"/1.27u Ni PLATING ON SWAGED TIPS MANUFACTURERS OPTION.
3. MOLDING MATERIAL: GLASS FILLED POLYESTER, FLAME RETARDANT PER UL–94V–0.
   COLOR: BLACK.
4. .020/.51 MAX FLASH AROUND ALL WINDOWS.
5. COMPANY LOGO MOLDED IN ON DATUM SURFACE –Z– APPROX. AS SHOWN.
6. .030/.76 MAX FLASH PERMISSIBLE ON THIS END OF PINS.
7. OTHER PLATINGS ARE AVAILABLE ON 68663, 68665, AND 68666.
8. .015/.38 MAX FLASH PERMISSIBLE ON THIS END OF PINS.
9. PLATING OPTIONS:
   MAY BE EITHER GOLD OR GXT PLATED AT MANUFACTURER'S OPTION.
10. ADD "LF" SUFFIX AT THE END OF PART NUMBER FOR LEAD FREE OPTION
11. THIS PRODUCT MEETS EUROPEAN UNION DIRECTIVES AND OTHER COUNTRY REGULATION AS DESCRIBED IN GS–22–008.
12. THE HOUSING WILL WITHSTAND EXPOSURE TO 260°C PEAK TEMPERATURE FOR 15 SECONDS IN A WAVE SOLDER APPLICATION WITH A 1.5mm MINIMUM THICK CIRCUIT BOARD. SEE APPLICATION NOTES/PROCEDURES IF THEY ARE AVAILABLE.

mat'l. code	surface	tolerance	projection	product family
NOTE 1 & 3	ISO 1302 ✓	ISO 406 ISO 1101		HEADER

ltr	ecn no	dr	date
H			

tolerances unless otherwise specified

angles	linear	
0°±2°		.XX±.01/.X±0.3
		.XXX±.005/.XX±0.13
		.XXXX±.0020/.XXX±0.051

INCH/MM

scale 2.5:1

title: STRAIGHT HEADER FOR ROUND WIRE RECEPTACLE

dr	M. CORNMAN	9/18/90
engr	M. LEACH	9/18/90
chr	M. LEACH	9/18/90
appd	M. LEACH	9/18/90

dwg no: 68664 — sheet 2 of 6 — size A3

type: Product Customer Drawing

sheet index | revision sheet

form: A3

FCIconnect.com
Copyright FCI

PDM: Rev:H STATUS: Released Printed: Oct 13, 2010

PRODUCT NO NOTE 10	NO OF POS	NO OF PINS	A SPACES	DIM B	DIM C ±.005 ±0.13	DIM D ±.005 ±0.13	DIM E ±.005 ±0.13	DIM F	POL. POS. ROW A	POL. POS. ROW B
68664-001	6	6	2	.200/5.08	.332/8.43	.066/1.68	--------	.130/3.30		
-002	8	8	3	.300/7.62	.432/10.97	.066/1.68	--------			
-003	10	10	4	.400/10.16	.532/13.52	.166/4.22	--------			
-004	12	12	5	.500/12.70	.632/16.05	.166/4.22	--------			
-005	14	14	6	.600/15.24	.732/18.59	.266/6.76	--------			
-006	16	16	7	.700/17.78	.832/21.13	.266/6.76	--------			
-007	18	18	8	.800/20.32	.932/23.67	.366/9.30	--------			
-008	20	20	9	.900/22.86	1.032/26.21	.066/1.68	.766/19.46			
-009	22	22	10	1.000/25.40	1.132/28.75		.866/22.00			
-010	24	24	11	1.100/27.94	1.232/31.29		.966/24.54			
-011	26	26	12	1.200/30.48	1.332/33.83		1.066/27.08			
-012	28	28	13	1.300/33.02	1.432/36.37		1.166/29.62			
-013	30	30	14	1.400/35.56	1.532/38.91		1.266/32.16			
-014	32	32	15	1.500/38.10	1.632/41.45		1.366/34.70			
-015	34	34	16	1.600/40.64	1.732/43.99		1.466/37.24			
-016	36	36	17	1.700/43.18	1.832/46.53		1.566/39.78			
-017	38	38	18	1.800/45.72	1.932/49.07		1.666/42.32			
-018	40	40	19	1.900/48.26	2.032/51.61		1.766/44.86			
-019	42	42	20	2.000/50.80	2.132/54.15		1.866/47.40			
-020	44	44	21	2.100/53.34	2.232/56.69		1.966/49.94			
-021	46	46	22	2.200/55.88	2.332/59.23		2.066/52.48			
-022	48	48	23	2.300/58.42	2.432/61.77		2.166/55.02			
-023	50	50	24	2.400/60.96	2.532/64.31		2.266/57.56			
-024	52	52	25	2.500/63.50	2.632/66.85		2.366/60.10			
-025	54	54	26	2.600/66.04	2.732/69.39		2.466/62.64			
-026	56	56	27	2.700/68.58	2.832/71.93		2.566/65.18			
-027	58	58	28	2.800/71.12	2.932/74.47		2.666/67.72			
-028	60	60	29	2.900/73.66	3.032/77.01		2.766/70.26			
-029	62	62	30	3.000/76.20	3.132/79.55		2.866/72.80			
-030	64	64	31	3.100/78.74	3.232/82.09		2.966/75.34			
-031	66	66	32	3.200/81.28	3.332/84.63		3.066/77.88			
-032	68	68	33	3.300/83.82	3.432/87.17		3.166/80.42			
-033	70	70	34	3.400/86.36	3.532/89.71		3.266/82.96			
68664-034	72	72	35	3.500/88.90	3.632/92.25	.066/1.68	3.366/85.50	.130/3.30		

FCIconnect.com

Copyright FCI

mat'l. code NOTE 1 & 3	surface ISO 1302 √	tolerance ISO 406 ISO 1101	projection
ltr / ecn no / dr / date	tolerances unless otherwise specified		
H	angles 0°±2°	linear .XX±.01/.X±0.3 / .XXX±.005/.XX±0.13 / .XXXX±.0020/.XXX±0.051	INCH/MM
			scale 2.5:1
	dr M. CORNMAN 9/18/90		
	engr M. LEACH 9/18/90		
	chr M. LEACH 9/18/90		
	appd M. LEACH 9/18/90		
sheet index / revision sheet			

product family: HEADER

title: STRAIGHT HEADER FOR ROUND WIRE RECEPTACLE

dwg no: 68664 — sheet 3 of 6 — size A3

type: Product Customer Drawing

form: A3

PDM: Rev:H STATUS: Released Printed: Oct 13, 2010

PRODUCT NO NOTE 10	NO OF POS	NO OF PINS	A SPACES	DIM B	DIM C ±.005 ±0.13	DIM D ±.005 ±0.13	DIM E ±.005 ±0.13	DIM F	POL. POS. ROW A	POL. POS. ROW B
68664-035	6	6	2	.200/5.08	.332/8.43	.066/1.68	--------	.155/3.94		
-036	8	8	3	.300/7.62	.432/10.97	.066/1.68	--------			
-037	10	10	4	.400/10.16	.532/13.52	.166/4.22	--------			
-038	12	12	5	.500/12.70	.632/16.05	.166/4.22	--------			
-039	14	14	6	.600/15.24	.732/18.59	.266/6.76	--------			
-040	16	16	7	.700/17.78	.832/21.13	.266/6.76	--------			
-041	18	18	8	.800/20.32	.932/23.67	.366/9.30	--------			
-042	20	20	9	.900/22.86	1.032/26.21	.066/1.68	.766/19.46			
-043	22	22	10	1.000/25.40	1.132/28.75		.866/22.00			
-044	24	24	11	1.100/27.94	1.232/31.29		.966/24.54			
-045	26	26	12	1.200/30.48	1.332/33.83		1.066/27.08			
-046	28	28	13	1.300/33.02	1.432/36.37		1.166/29.62			
-047	30	30	14	1.400/35.56	1.532/38.91		1.266/32.16			
-048	32	32	15	1.500/38.10	1.632/41.45		1.366/34.70			
-049	34	34	16	1.600/40.64	1.732/43.99		1.466/37.24			
-050	36	36	17	1.700/43.18	1.832/46.53		1.566/39.78			
-051	38	38	18	1.800/45.72	1.932/49.07		1.666/42.32			
-052	40	40	19	1.900/48.26	2.032/51.61		1.766/44.86			
-053	42	42	20	2.000/50.80	2.132/54.15		1.866/47.40			
-054	44	44	21	2.100/53.34	2.232/56.69		1.966/49.94			
-055	46	46	22	2.200/55.88	2.332/59.23		2.066/52.48			
-056	48	48	23	2.300/58.42	2.432/61.77		2.166/55.02			
-057	50	50	24	2.400/60.96	2.532/64.31		2.266/57.56			
-058	52	52	25	2.500/63.50	2.632/66.85		2.366/60.10			
-059	54	54	26	2.600/66.04	2.732/69.39		2.466/62.64			
-060	56	56	27	2.700/68.58	2.832/71.93		2.566/65.18			
-061	58	58	28	2.800/71.12	2.932/74.47		2.666/67.72			
-062	60	60	29	2.900/73.66	3.032/77.01		2.766/70.26			
-063	62	62	30	3.000/76.20	3.132/79.55		2.866/72.80			
-064	64	64	31	3.100/78.74	3.232/82.09		2.966/75.34			
-065	66	66	32	3.200/81.28	3.332/84.63		3.066/77.88			
-066	68	68	33	3.300/83.82	3.432/87.17		3.166/80.42			
-067	70	70	34	3.400/86.36	3.532/89.71		3.266/82.96			
68664-068	72	72	35	3.500/88.90	3.632/92.25	.066/1.68	3.366/85.50	.155/3.94		

mat'l. code NOTE 1 & 3	surface ISO 1302 √	tolerance ISO 406 ISO 1101	projection
ltr / ecn no / dr / date	tolerances unless otherwise specified		
H	angles 0°±2°	linear .XX±.01/.X±0.3 / .XXX±.005/.XX±0.13 / .XXXX±.0020/.XXX±0.051	INCH/MM
			scale 2.5:1
	dr	M. CORNMAN	9/18/90
	engr	M. LEACH	9/18/90
	chr	M. LEACH	9/18/90
	appd	M. LEACH	9/18/90
sheet index / revision sheet			

product family: HEADER

title: STRAIGHT HEADER FOR ROUND WIRE RECEPTACLE

dwg no: 68664 — sheet 4 of 6 — size A3

type: Product Customer Drawing

form: A3

FCIconnect.com

Copyright FCI

PDM: Rev:H STATUS: Released Printed: Oct 13, 2010

PRODUCT NO NOTE 10	NO OF POS	NO OF PINS	A SPACES	DIM B	DIM C ±.005 ±0.13	DIM D ±.005 ±0.13	DIM E ±.005 ±0.13	DIM F	POL. POS. ROW A	POL. POS. ROW B
68664-069	6	6	2	.200/5.08	.332/8.43	.066/1.68	--------	.200/5.08		
-070	8	8	3	.300/7.62	.432/10.97	.066/1.68	--------			
-071	10	10	4	.400/10.16	.532/13.52	.166/4.22	--------			
-072	12	12	5	.500/12.70	.632/16.05	.166/4.22	--------			
-073	14	14	6	.600/15.24	.732/18.59	.266/6.76	--------			
-074	16	16	7	.700/17.78	.832/21.13	.266/6.76	--------			
-075	18	18	8	.800/20.32	.932/23.67	.366/9.30	--------			
-076	20	20	9	.900/22.86	1.032/26.21	.066/1.68	.766/19.46			
-077	22	22	10	1.000/25.40	1.132/28.75		.866/22.00			
-078	24	24	11	1.100/27.94	1.232/31.29		.966/24.54			
-079	26	26	12	1.200/30.48	1.332/33.83		1.066/27.08			
-080	28	28	13	1.300/33.02	1.432/36.37		1.166/29.62			
-081	30	30	14	1.400/35.56	1.532/38.91		1.266/32.16			
-082	32	32	15	1.500/38.10	1.632/41.45		1.366/34.70			
-083	34	34	16	1.600/40.64	1.732/43.99		1.466/37.24			
-084	36	36	17	1.700/43.18	1.832/46.53		1.566/39.78			
-085	38	38	18	1.800/45.72	1.932/49.07		1.666/42.32			
-086	40	40	19	1.900/48.26	2.032/51.61		1.766/44.86			
-087	42	42	20	2.000/50.80	2.132/54.15		1.866/47.40			
-088	44	44	21	2.100/53.34	2.232/56.69		1.966/49.94			
-089	46	46	22	2.200/55.88	2.332/59.23		2.066/52.48			
-090	48	48	23	2.300/58.42	2.432/61.77		2.166/55.02			
-091	50	50	24	2.400/60.96	2.532/64.31		2.266/57.56			
-092	52	52	25	2.500/63.50	2.632/66.85		2.366/60.10			
-093	54	54	26	2.600/66.04	2.732/69.39		2.466/62.64			
-094	56	56	27	2.700/68.58	2.832/71.93		2.566/65.18			
-095	58	58	28	2.800/71.12	2.932/74.47		2.666/67.72			
-096	60	60	29	2.900/73.66	3.032/77.01		2.766/70.26			
-097	62	62	30	3.000/76.20	3.132/79.55		2.866/72.80			
-098	64	64	31	3.100/78.74	3.232/82.09		2.966/75.34			
-099	66	66	32	3.200/81.28	3.332/84.63		3.066/77.88			
-100	68	68	33	3.300/83.82	3.432/87.17		3.166/80.42			
-101	70	70	34	3.400/86.36	3.532/89.71		3.266/82.96			
68664-102	72	72	35	3.500/88.90	3.632/92.25	.066/1.68	3.366/85.50	.200/5.08		

mat'l. code NOTE 1 & 3	surface ISO 1302 √	tolerance ISO 406 ISO 1101	projection
ltr / ecn no / dr / date	tolerances unless otherwise specified		
H	angles 0°±2°	linear .XX±.01/.X±0.3 / .XXX±.005/.XX±0.13 / .XXXX±.0020/.XXX±0.051	INCH/MM
			scale 2.5:1
	dr M. CORNMAN 9/18/90		
	engr M. LEACH 9/18/90		
	chr M. LEACH 9/18/90		
	appd M. LEACH 9/18/90		
sheet index / revision sheet			

product family: HEADER

title: STRAIGHT HEADER FOR ROUND WIRE RECEPTACLE

dwg no: 68664 — sheet 5 of 6 — size A3

type: Product Customer Drawing

form: A3

FCIconnect.com

Copyright FCI

PRODUCT NO NOTE 10	NO OF POS	NO OF PINS	A SPACES	DIM B	DIM C ±.005 ±0.13	DIM D ±.005 ±0.13	DIM E ±.005 ±0.13	DIM F	POL. POS. ROW A	POL. POS. ROW B
68664-103	6	6	2	.200/5.08	.332/8.43	.066/1.68	--------	.380/9.65	———	———
-104	8	8	3	.300/7.62	.432/10.97	.066/1.68	--------	.380/9.65	↕	↕
-105	12	12	5	.500/12.70	.632/16.05	.166/4.22	--------	.380/9.65		
-106	16	16	7	.700/17.78	.832/21.13	.266/6.76	--------	.380/9.65		
-107	20	20	9	.900/22.86	1.032/26.21	.066/1.68	.766/19.46	.380/9.65	———	———
68664-108	14	13	6	.600/15.24	.732/18.59	.266/6.76	--------	.130/3.30	1	———
68664-132	32	32	15	1.500/38.10	1.632/41.45	.066/1.68	1.366/34.70	.325/8.26	———	———

mat'l. code NOTE 1 & 3	surface ISO 1302 √	tolerance ISO 406 ISO 1101	projection
ltr / ecn no / dr / date	tolerances unless otherwise specified		
H	angles 0°±2°	linear .XX±.01/.X±0.3 / .XXX±.005/.XX±0.13 / .XXXX±.0020/.XXX±0.051	INCH/MM
			scale 2.5:1
	dr M. CORNMAN 9/18/90		
	engr M. LEACH 9/18/90		
	chr M. LEACH 9/18/90		
	appd M. LEACH 9/18/90		
sheet index / revision sheet			

product family: HEADER

title: STRAIGHT HEADER FOR ROUND WIRE RECEPTACLE

dwg no: 68664 — sheet 6 of 6 — size A3

type: Product Customer Drawing

form: A3

FCIconnect.com

Copyright FCI

PDM: Rev:H STATUS: Released Printed: Oct 13, 2010

X-ON Electronics

Largest Supplier of Electrical and Electronic Components

Click to view similar products for Headers & Wire Housings ***category:***

Click to view products by FCT Electronics ***manufacturer:***

Other Similar products are found below :

95000-104TRLF 10135584-644402LF DF62W-EP2022PCA 95000-106TRLF DF62W-2022SCA DF62W-EP2022PC 2203348 DF62W-2022SC 1084018 1029039 1084017 802-10-012-10-002000 1112640 1112639 000-34000 0009482033 0009507031 57102-S06-03LF 57202-S52-04LF PCN6-15S-2.5E 0039019024 58102-G61-06LF 582553-1 0009485154 0009508121 0022285053 0050291907 018731A LY20-4P-DT1-P1E-BR 02.125.8002.8 60101931 60598-1 (Cut Strip) M1625-3R/100 61062-3 61082-181009 636-1427 638009-1 641938-9 641991-4 644168-1 647662-1 65039-019ELF 65781-018 65781-047 65817-002LF 65817-015LF 65863-015LF 66207-023LF 67016-026LF 67046-001LF