DUCATI energia

HISTORY DRIVES THE FUTURE

Since 1926

Power electronic capacitors

INDEX

NEWS DUCATI

New DCH 86 A Series for Electric Vehicle / Hybrid Electric Vehicle Applications ____ 4
New DC 83 and DCH 83 Series ____ 4
New High Performance GPX 84 series ____ 5
DC 85 C and DC 86 PS Series with High Temperature & Extended Life Configurations ____ 5
Fire and smoke safety testing: EN 45545-2 Approved DC-Link Capacitors ____ 5

MAIN TYPES OF CAPACITORS ____ 6

CROSS REFERENCE TABLE ____ 7

DUCATI ENERGIA ____ 8

CAPACITORS FOR AC FILTER & GENERAL PURPOSE ____ 9

MODULO XD series ____ 12
GP 84 series ____ 13
GPX 84 series ____ 20
GP 42 series ____ 24

CAPACITORS FOR DC AND PULSE APPLICATION ____ 29

DCH 85 C series ____ 30
DC 85 C series ____ 36
DC 89 HC series ____ 40
DCH 86 PS series ____ 46
DC 86 PS series ____ 49
DC 86 P series ____ 52
DC 85 B series ____ 55
DC 83 P and DCH 83 P series ____ 58

METALLIC BOX ____ 61

DC 88 M series ____ 62
DC 45 series ____ 66

APPENDIX ____ 72

New DCH 86 A Series for Electric Vehicle / Hybrid Electric Vehicle Applications

DCH 86 A WERE DESIGNED TO LEVERAGE THE ADVANTAGES OF DUCATI HIGH CRYSTALLINITY FILM TECHNOLOGY FOR EV/HEV APPLICATIONS

EV/HEV are on the verge of revolutionizing our lives but pose significant challenges to present DC-Link Capacitors' designs: extreme reliability, high operating temperatures and optimal weight/volume targets. DCH 86 A Series leverages the advantages of Ducati's High-Crystallinity Films to reach and exceed these aspiring goals while maintaining the excellent cost/performance ratio of Metallized Polypropylene Film Capacitors.

TECHNICAL ASPECTS

- Ducati High-Crystallinity Film Technology
- PA66 or TPS Cases
- Dry-Winding – Dry-Potting Technology
- Flat-Wound Element Technology equalizes mechanical stresses and prevents thermal or vibrational degradation

SMART FEATURES

- Special Multi-Core Assembly minimizes field effects for extremely low ESL
- Bare/Tinned Copper or Laminated Busbars for maximum project flexibility
- Proprietary Metallization Pattern/Profiles maximize safety and optimize capacity changes across the useful lifei

CUSTOMIZED APPROACH

The rapidly evolving technology and market for EV/HEV technologies demand project-specific developments. Ducati Energia studies each specification and mission-profile applying its expertise to provide the most suitable solution for each case

STANDARDS / SPECIFICATIONS

IEC 61071-1, IEC 61071-2
ZVEI B-01 ÷ B-06
UL-STD-94, UL 810

New DC 83 and DCH 83 Series

Ducati, in order to expand its Power Electronic Capacitors' product line, is introducing the new DC83 andDCH 83 series, a DC-Link capacitor in a new prismatic plastic case. The new form factor is designed for common DC-Link applications and the internal design, based on the exclusive Ducati Energia High Crystallinity Film, guarantees high capacity stability while maximizing the current capability.
A special internal construction allows the minimization of field effects, thus guaranteeing real-life low ESL.

New High Performance GPX 84 series

Ducati is proud to introduce the new single-phase, cylindrical AC & DC Capacitor, GPX 84 is the ideal solution for High Performance applications, in terms of high current capability, higher operating temperatures and stable capacity values during its lifecycle.
GPX 84 has got a fortified internal construction based on busbar connections that, alongside the special metallized film used, allows the capacitor to reach high current and high temperatures, while having high stability parameters in terms of capacity.
GPX 84 is designed to be used in high demanding applications. Safety features are based on integrated UL-approved overpressure disconnecto and DRY resin impregnation, in high quality aluminum case.

DC 85 C and DC 86 PS Series with High Temperature & Extended Life Configurations

By using its new High Crystallinity Film Technology Ducati achieved highest in market Capacity Density without compromising the expected performance or imposing hidden operating condition limitations. Now the same technology is applied to the standard-density DC 85 C and DC 86 PS series, thus obtaining a reinforced series with extended operating capabilities:

DUCATI HIGH CRYSTALLINITY FILM TECHNOLOGY USED TO EXTEND THE OPERATING TEMPERATURE RANGE OR THE OPERATING LIFE OF DC 85 C HC AND DC 86 PS HC

- Operating (Case) Temperature Range: -40°C ÷ 105°C without derating
  Operating Life Range: 100.000hrs @ UN DC & 90°C HotSpot
- Operating (Case) Temperature Range: -40°C ÷ 105°C without derating
  Operating Life Range: 400.000hrs @ UN DC & 70°C HotSpot

TECHNICAL ASPECTS

- Ducati High-Crystallinity Film Technology
- Same Dimensions & General Specs as DC 85 C (pages 22) and DC 86 PS (pages 35)

STANDARDS / APPROVAL

IEC 61071-1, IEC 61071-2
UL-STD-94, UL 810, UL Approval Filenumber: e192559

Fire and smoke safety testing: EN 45545-2 Approved DC-Link Capacitors

EN 45545-2 is an important international standard that defines a classification system that specifies requirements for fire behavior of materials and products used in trains.
Ducati, is proud to announce that DC-Link capacitors as DC 83, DCH 83, DCH 85 B, DC 86 P, DC 86 PS, DC 89 HC and DC H 85 C/DC 85 C (in 85 and 100 mm diameter) are certified and compliant EN 45545-2, in order to achieve the maximum security level in case of fire on railway vehicles.

MAIN TYPES OF CAPACITORS

CAPACITOR TYPE		SERIES	APPLICATIONS
	3-PHASE AC FILTERING	Modulo XD - 416.46	3-phase filter/PFC for wind generator / AC filters
	GENERAL PURPOSE	GP 42 - 416.42 GP 84 - 416.84 GPX 84 -	switching, high performance lighting, UPS filter, AC-link, resonant circuit, PFC with high harmonics, DC-link, filter
	HIGH-DENSITY / HIGH-TEMPERATURE DC APPLICATION	DCH 85C - 416.85.V/H DCH 86 PS - 416.86.V/H	High-Density / High-Temperature DC-Link, Filtering and Storage
	DC APPLICATION	DC 85 C/B - 416.85 DC 86 P - 416.86 DC 86 PS - 416.86 DC89 HC - 416.89 DC 88 M - 416.88 DC 45 - 415.45 DC 83 P / DCH 83	DC-link,filtering and storage

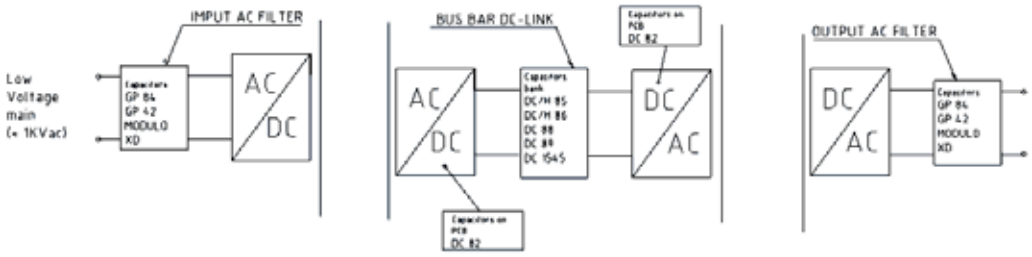

TYPICAL DC capacitors selection for IGBT power conversion

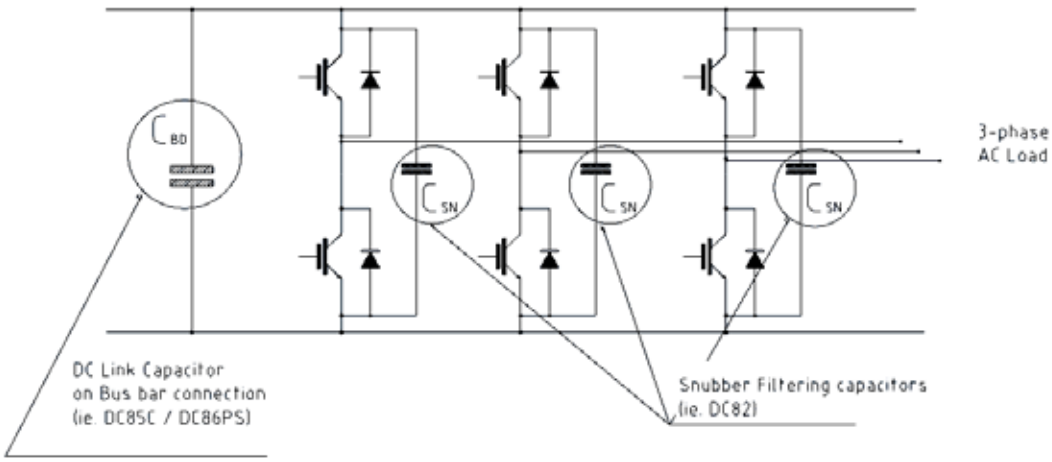

CROSS REFERENCE TABLE

Rated DC / AC voltage (V) versus Capacitance (uF)

CAPACITANCE Cn [uF]	DC rated voltage Un [V]	400 - 800	800 - 1400	1400 - 2000	2000 - 2500	2500 - 3000	3000 - 4000	4000 - 6000
	AC rated voltage Urms [V]	**250 - 550**	**690 - 930**	**-**	**-**	**-**	**-**	**-**
	0 - 50	GP42 GP84 - GPX84 XD	DC89 HC GP42 GP84 - GPX84 XD	DC89 HC		DC85 B	DC85 B	DC85 B
	50 - 100	DC89 HC GP42 GP84 - GPX84 XD	DC89 HC GP84 - GPX84 XD	DC85 C		DC85 B	DC85 B	DC86 P
	100 - 150	DC89 HC GP84 - GPX84 XD	DC89 HC DC85 C GP84 - GPX84	DC85 C	DC85 B	DC85 B		DC86 P
	150 - 200	DC89 HC GP84 - GPX84	DC89 HC DC85 C GP84 - GPX84	DC85 C	DC85 B DC83 P DCH83	DC85 B	DC86 P	DC86 P
	200 - 250	DC89 HC GP84 - GPX84		DC85 C DC83 P	DC85 B DCH83		DC86 P	DC86 P
	250 - 300	GP84 - GPX84	DC85 C	DC85 C			DC86 P	
	300 - 400	DC85 C GP84 - GPX84	DC85 C DC83 P	DC85 C DCH 83			DC86 P	
	400 - 500	DC85 C GP84 - GPX84	DC85 C DC83 P	DC85 C DCH83		DC86 P	DC86 P	
	500 - 600	DC85 C GP84 - GPX84	DC85 C DC83 P	DC85 C DCH83		DC86 P		DC45
	600 - 1000	DC85 C	DC85 C DC85 B DC83 P DCH83	DC85 C DC86 P	DC86 P	DC86 P	DC45	
	1000 - 2000	DC85 C DC85 B DC83 P DCH83	DC85 C DC85 B DC86 P DC83 P DCH83	DC86 P	DC86 P	DC88 M DC45		
	2000 - 3000	DC85 C DC85 B	DC85 C DC85 B DC86 P	DC86 P	DC88 M DC45			
	3000 - 6000	DC85 C DC85 B DC86 P	DC 85 C DC86 P	DC88 M				
	6000 - 10000	DC86 P	DC86 P DC88 M DC45					

DC - series: - DC Application: expressly designed for operation with DC voltage.
GPX - series: - General purpose application: designed for operation both AC and DC voltage.
XD - series: - Three-phases capacitors for harmonic filtering applications and PFC applications.

DUCATI ENERGIA

Capacitor excellence since 1926

DUCATI, founded in 1926 by Ducati brothers, has been among the first in the world to start industrial production of capacitors, and has been a market leader ever since.
Since its foundation, DUCATI Energia has always been in the forefront of technical and industrial development, leading the research shaping today's technology and cooperating to the upgrades and improvements leading to the current IEC and EN Standards for Capacitors.
DUCATI energia firstly introduced the Metallised Polypropylene Film technology and its innovative PPM and PPMh film set the reference for this technology, outclassing the obsolete paper/oil and gas technology in terms of superior performance and reduced dimensions.

Quality

Utmost attention to product quality and customer service are constants in DUCATI's history and the main factors contributing to its success worldwide. DUCATI has always been one of the first companies in its field, in Italy and in Europe, to adopt the most modern standards and procedures in order to assure the highest level of product quality and reliability.
The QUALITY SYSTEM of DUCATI Energia SpA, capacitor division, as described in the Quality Manual, was one of the first in Italy to be approved by the BSI in accordance with ISO 9002 (EN 29002) procedures: Certificate of Registration N. FM22004. DUCATI Energia is fully certified following ISO 9001:2008, ISO 14001:2004 and OHSAS 18001:2007.
All this has been achieved thanks to fully automated and integrated production processes, completely new and innovative machines, production process control methods based on accurate specifications and the assigning of responsibility to operators at all levels.
Capacitors, systems and relays comply with the requirements set forth in EC Directives 73/23 and 93/68 ("Low Voltage Directive"), 89/336 and 92/31 ("Electromagnetic Compatibility Directive").
Nearly all models are certified by international institutes and all are manufactured in full compliance with the requirements of said standards.

DUCATI energia Group main fields of activities are:

- Motor Lighting Capacitors
- Power Electronics Capacitors
- Power Factor Correction Capacitors and Systems (LV and MV)
- Alternators and Ignition Systems
- Electrical Vehicles and Charging Stations for Electrical Vehicles
- Energy Analysers
- Control Systems for energy grids
- Railways Signalling systems
- Ticketing and Transport Automation systems

Certification of Quality Management System ISO 9001:2008

Certification of Environmental Management System ISO 14001:2004

Certification of Occupational Health and Safety Management System BS OHSAS 18001:2007

CAPACITORS FOR AC FILTER & GENERAL PURPOSE

MODULO XD series

Cylindrical Aluminum Case

MODULO XD three-phase Capacitors are a reliable and effective solution for your AC-filtering needs and for high-performance PFC applications.
The Aluminum case, IP20 screw-tightened clamp connector and optional IP54 cap ensure maximum flexibility of use and installation even in case of challenging environmental conditions.

The DRY resin filling and the UL-approved overpressure safety mechanism tailored to each size and current level provide highest safety against critical failures in case of overload or at the end of operating life.

The internal construction is based on Δ-connected (Y-connection available on request) windings specially designed to provide high capacity stability of the capacitor's life as well as high RMS current capability over a very wide frequency range.

Main characteristics:

- Self-Healing Metallized Polypropylene Film
- UL-Approved Overpressure Safety Device
- Aluminum Case
- DRY Resin filling

Main applications:

- AC Filtering
- High-Performance PFC (high harmonics, voltage and RMS/surge current)
- UPS and Wind-Power Applications

General Characteristics

Rated voltage	AC 450 ÷ 800 V (*)
Capacitance range	1 ÷ 250 μF (*)
Capacitance tolerance	– 5% / +10%
Test voltage between terminals	2.15 x Urms - 2s
Test voltage between terminals and case	3.0 kVac 50 Hz - 10s
Operating temperatures	–40/85°C
Protection degree	IP 20 (IP54 on request)
Hot spot temperature	85 °C
Voltage raise (dV/dt)	110 V/μs
Dielectric losses (tan δo)	0.2 W/kVAr
Typical total losses (tan δ)	0.55 W/kVAr
Maximum cable section	25 mmq
Three-phase connection	Delta
Filling	Dry polyurethane resin
Dielectric	Metallized polypropylene film
Case	Aluminum
Life expectancy	100.000 h (**)
Failure quota	50/10E9
Installation	Vertical/horizontal
Reference standards	IEC 61071-1/2 - IEC 60831 - UL 810
UL–CSA approved	File n. E102953
M4 screw clamp terminals	Max 1.5 Nm
M12 fixing bolt	Max 10 Nm

(*) Standard values. other values on request.
(**) For details please refer to page 75e.

Capacitance 3x Cn [µF]	Dimension (ØxH) [mm]	RMS Current IRMS [A]	Repet. Peak Current Ip [kA]	Surge Current Is [kA]	Series Resistance Rs [mΩ]	Inductance Ls [nH]	Thermal Resistance R_{THC} [° C/W]	Typical Weight [kg]	Pcs. / box	Box type	Part number 416.46.xxxx
Urms = 450 V	**U_{nAC}= 640 V**	**Surge**	**Voltage [Us]= 1380 V**								
3x7.9	65x165	10	0.3	0.9	5.90	120	5.8	0.65	14	E	3020
3x13	65x165	10	0.5	1.4	5.90	120	4.3	0.65	14	E	3030
3x26	75x165	14	1.0	2.9	5.90	120	2.2	0.80	12	F	3050
3x39	75x255	20	1.6	4.3	4.04	150	1.9	1.25	6	F	3080
3x52	75x255	27	2.1	5.7	3.03	150	1.9	1.60	6	F	3100
3x66	85x255	34	2.6	7.3	2.64	150	1.6	1.60	6	F	3150
3x79	90x255	40	3.2	8.7	2.20	150	1.4	1.80	6	F	3200
3x104	100x255	54	4.2	11.4	1.65	150	1.1	2.25	6	G	3260
3x131	116x255	55	5.2	12.0	2.15	150	0.9	2.85	6	H	3310
3x157	116x290	55	6.3	12.0	2.58	180	0.8	3.30	6	H	3360
3x235	116x370	65	9.4	14.0	2.72	200	0.7	4.20	4	I	3375
Urms= 500 V	**U_{nAC}= 710 V**	**Surge**	**Voltage [Us]= 1530 V**								
3x6.3	65x165	10	0.3	0.7	5.90	120	5.8	0.65	14	E	4020
3x10.5	65x165	10	0.4	0.1	5.90	120	4.3	0.65	14	E	4030
3x21	75x165	12	0.8	2.3	5.90	120	2.2	0.80	12	F	4050
3x32	75x255	18	1.3	3.5	4.99	150	1.9	1.25	6	F	4080
3x43	75x255	24	1.7	4.7	3.74	150	1.9	1.60	6	F	4100
3x53	85x255	30	2.1	5.8	3.27	150	1.6	1.60	6	F	4150
3x64	90x255	36	2.6	7.0	2.72	150	1.4	1.80	6	F	4200
3x85	100x255	49	3.4	9.4	2.04	150	1.1	2.25	6	G	4260
3x106	116x255	55	4.2	11.7	2.15	150	0.9	2.85	6	H	4310
3x127	116x290	55	5.1	12.0	2.58	180	0.8	3.30	6	H	4360
3x190	116x370	65	8.5	14.0	2.72	200	0.7	4.20	4	I	4375
Urms= 550 V	**U_{nAC}= 780 V**	**Surge**	**Voltage [Us]= 1680 V**								
3x5.1	65x165	10	0.2	0.6	6.50	120	5.8	0.65	14	E	5020
3x8.5	65x165	10	0.3	0.9	6.50	120	4.3	0.65	14	E	5030
3x17	75x165	11	0.7	1.9	6.50	120	2.2	0.80	12	F	5050
3x25	75x255	17	1.0	2.8	6.04	150	1.9	1.25	6	F	5080
3x34	75x255	22	1.4	3.7	4.53	150	1.9	1.60	6	F	5100
3x43	85x255	28	1.7	4.7	3.95	150	1.6	1.60	6	F	5150
3x52	90x255	33	2.1	5.7	3.29	150	1.4	1.80	6	F	5200
3x70	100x255	44	2.8	7.7	2.47	150	1.1	2.25	6	G	5260
3x87	116x255	55	3.5	9.6	2.15	150	0.9	2.85	6	H	5310
3x105	116x290	55	4.2	11.6	2.58	180	0.8	3.30	6	H	5360
3x158	116x370	65	7.6	14.0	2.72	200	0.7	4.20	4	I	5375

MODULO XD series

3-Phase AC filter capacitors

Capacitance 3x Cn [µF]	Dimension (ØxH) [mm]	RMS Current IRMS [A]	Repet. Peak Current Ip [kA]	Surge Current Is [kA]	Series Resistance Rs [mΩ]	Inductance Ls [nH]	Thermal Resistance R_{THC} [° C/W]	Typical Weight [kg]	Pcs. / box	Box type	Part number 416.46.xxxx
U ms= 690 V		**U_{nAC}= 980 V**		**Surge Voltage [Us]= 2110 V**							
3x22	75x255	18	0.9	2.4	5.83	150	1.9	1.60	6	F	6100
3x28	85x255	22	1.1	3.1	4.66	150	1.6	1.60	6	F	6150
3x33	90x255	26	1.3	3.6	4.75	150	1.4	1.80	6	F	6200
3x45	100x255	35	1.8	5.0	3.56	150	1.1	2.25	6	G	6260
3x56	116x255	44	2.2	6.2	2.85	150	0.9	2.85	6	H	6310
3x67	116x290	53	2.7	7.4	2.59	180	0.8	3.30	6	H	6360
Urms= 800 V		**U_{nAC}=1140 V**		**Surge Voltage [Us]= 2440 V**							
3x17	75x255	15	0.7	1.9	7.84	150	1.9	1.60	6	F	8100
3x21	85x255	19	0.8	2.3	6.27	150	1.6	1.60	6	F	8150
3x25	90x255	23	1.0	2.8	6.39	150	1.4	1.80	6	F	8200
3x33	100x255	30	1.3	3.6	4.79	150	1.1	2.25	6	G	8260
3x41	116x255	38	1.6	4.5	3.83	150	0.9	2.85	6	H	8310
3x50	116x290	46	2.0	5.5	3.48	180	0.8	3.30	6	H	8360

NOTES:
(Cn) Tolerance standard value: –5% / +10%. Other tolerance values on request. **(Cn) - (Urms)** Capacitance and rated voltage standard values, other values on request. (**Rs**)Releted at 1 KHz. (**R_{THC}**) Thermal resistance natural cooling,AMBIENT to CASE. **(Irms)** RMS Current @ 45 °C ambient temperature.
On request, external box discharge resistor (not available for series 690 V - 800 V).

Safety system:
Overpressure protection device. To enable the device to operate efficiently, it is necessary to leave a gap of at least 30 mm above the element and use flexible leads for the connection. Dimension with overpressure device activated.

Box TYPE
Standard box dimensions:
E= 195x390x255 mm
F= 185x290x270 mm
G= 225x340x270 mm
H= 330x340x225 mm
I= 330x340x225 mm

Terminal cover I P54 when properly used
(Only for capacitor diameter ≥ 85 mm)

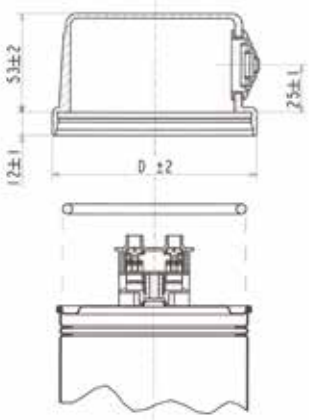

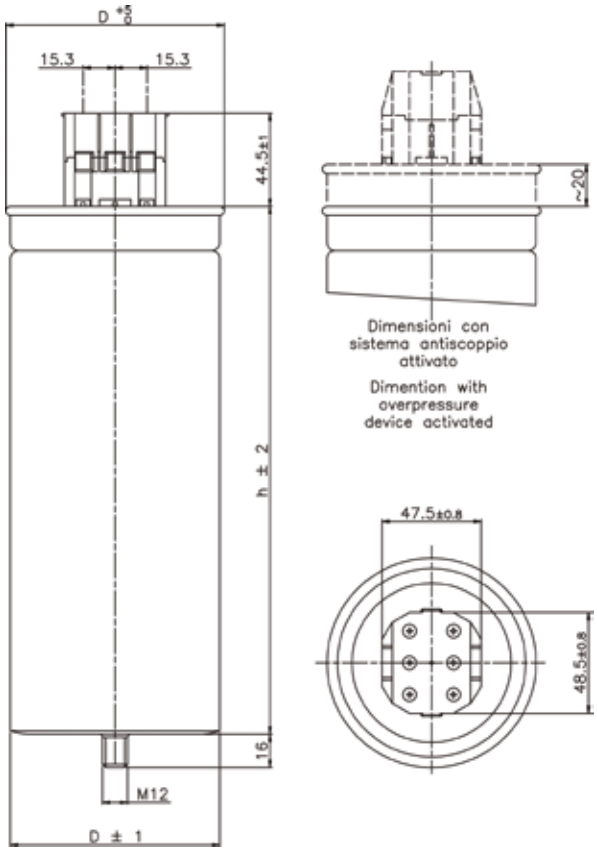

Capacitor diameter (Ø)	Terminal cover	Terminal cover (Ø MAX)	Pcs. x box
[mm]	CODE	[mm]	
85	316523338	94	30
90	316523339	99	30
100	316523340	109	30
116	316523341	125	30

GP 84 series

General purpose capacitors
Cylindrical Aluminum Case

GP84 single-phase, cylindrical AC & DC Capacitors are the ideal solution for most AC Filter requirements as well as special PFC projects.

The sturdy construction with Aluminum case and plastic lid, the wide range of available connections and the safety features based on the integrated UL-approved overpressure disconnector and DRY resin impregnation ensure GP84 can be easily and reliably integrated into any application and environmental condition.

Main characteristics:

- Self-Healing Metallized Polypropylene Film
- UL-Approved Overpressure Safety Device
- Aluminum Case
- DRY Resin filling
- Wide range of connections with high current capability

Main applications:

- AC Filtering
- High-Performance PFC (high harmonics, voltage and RMS/surge current)
- UPS and Wind-Power Applications

General Characteristics

RMS Voltage range	250 ÷ 1000 V
Capacitance range	10 ÷ 600 µF
Capacitance tolerance	±5% / ±10%
Max. RMS current	80 A
Series resistance (Rs)	< 8 mΩ
Thermal resistance natural cooling (R_{THc})	< 3.0 °C/W
Max. voltage raise of rise (dV/dT)	≤ 100 V/µs
Terminals	M6 or M10 screw-type bolts or double tag 6.3 x 0.8 mm
Operating temperature	–40 / +85 °C
Storage temperature	–40 / +85 °C
Test voltage	U_{tc}= 3 kVac / 6 kVac @50 Hz 10 s U_{tt}= 1.5 x UnDC 10 s
Filling	Dry polyurethane resin
Dielectric	Metallized PPMh film
Cylindrical case	Aluminum
Life expectancy	100.000 h (*)
Failure quota	50 / 10E9
Reference standards	IEC 1071-1/2 - UL 810
UL-CSA approved (c UL us) -10 kA AFC	File n. E102953 (**)
M6 Screw Terminals	3 Nm
M10 Screw Terminals	6 Nm
M12 fixing bolt	Max 10 Nm

Life expectancy	4.16.84.2xxx Series	4.16.84.3xxx Series	4.16.84.4xxx Series	4.16.84.5xxx Series	4.16.84.6xxx Series	4.16.84.9xxx Series
100.000 h (rated)	250 V	330 V	450 V	550 V	690 V	930 V
50.000 h	275 V	360 V	500 V	575 V	760 V	1025 V
25.000 h	300 V	400 V	540 V	630 V	830 V	1120 V
12.500 h	330 V	450 V	600 V	690 V	930 V	1250 V

(*) Life Derating at operating voltage (according to the chart on page 10)
(**) UL Approved for A, C and F solution (excepted series 690 V - 930 V solution A).

Cn [µF]	I_{MAX}* [A]	I_{PK} C_w [A]	I_{PK} I_W [kA]	I_S [kA]	R_{THC} natural cooling [°C/W]	LESR [nH]	Tan MAX @50Hz [10-4]	Ø [mm]	H [mm]	Weight [g]	Mechanical solution	Part n. 416.84.	Pcs. / box	Box type
Urms= 250 V Un_{AC} = 350 V Un_{DC}= 490 V Us= 950 V														
60	22	33	1.7	9	2.7	130	5.0	55	115	300	A / C	2.1x.y	28	1
80	22	33	1.7	9	2.7	130	5.0	55	115	340	A / C	2.1x.y	28	1
100	25	38	1.9	11	2.2	160	5.0	55	150	370	A / C	2.2x.y	21	1
120	25	38	1.9	11	2.2	160	5.0	55	150	390	A / C	2.2x.y	21	1
150	32	48	2.4	13	2.0	160	5.5	60	150	450	A / C	2.3x.y	18	1
175	36	54	2.7	16	1.8	170	6.0	65	150	520	A / C	2.4x.y	16	1
200	38	57	2.9	12	1.7	180	6.5	65	165	580	A / C	2.5x.y	16	1
230	40	60	3.0	20	1.3	200	7.0	75	180	820	F	2.6x.7	6	2
250	40	60	3.0	20	1.3	200	7.0	75	180	830	F	2.6x.7	6	2
300	40	60	3.0	20	1.3	200	7.0	75	180	860	F	2.6x.7	6	2
350	45	68	3.4	20	1.1	210	7.5	85	180	980	F	2.7x.7	6	2
400	45	68	3.4	20	1.1	210	7.5	85	180	1050	F	2.7x.7	6	2
500	78	117	5.9	20	0.9	230	8.5	90	210	1400	F	2.9x.7	6	3
600	80	120	6.0	18	0.8	300	9.0	85	280	1700	F	2.9x.7	6	4
Urms= 330 V Un_{AC}= 470 V Un_{DC}= 600 V Us= 1150 V														
50	22	33	1.7	7	2.7	160	5.0	55	115	320	A / C	3.1x.y	28	1
80	26	39	2.0	8	2.2	160	6.0	55	150	390	A / C	3.2x.y	21	1
100	26	39	2.0	8	2.2	160	6.0	55	150	400	A / C	3.2x.y	21	1
120	30	45	2.3	10	2.0	160	6.0	60	150	460	A / C	3.3x.y	18	1
150	34	51	2.6	13	1.8	170	6.5	65	150	540	A / C	3.4x.y	16	1
175	38	57	2.9	10	1.7	180	7.0	65	165	600	A / C	3.5x.y	16	1
200	40	60	3.0	14	1.3	200	7.5	75	180	860	F	3.6x.7	6	2
250	40	60	3.0	14	1.3	200	7.5	75	180	860	F	3.6x.7	6	2
300	45	68	3.4	18	1.1	210	7.5	85	180	1100	F	3.7x.7	6	2
350	70	105	5.3	16	1.0	230	8.0	85	210	1350	F	3.8x.7	6	3
400	75	113	5.6	18	0.9	230	8.5	90	210	1450	F	3.9x.7	6	3
450	80	120	6.0	13	0.8	300	9.0	85	280	1750	F	3.9x.7	6	4
Urms= 450 V Un_{AC}= 630 V Un= 825 V Us= 1600 V														
20	20	30	1.5	4	2.7	130	5.0	55	115	250	A / C	4.0x.y	28	1
30	20	30	1.5	4	2.7	130	5.0	55	115	300	A / C	4.0x.y	28	1
40	24	36	1.8	4.5	2.2	160	6.0	55	150	370	A / C	4.1x.y	21	1
50	24	36	1.8	4.5	2.2	160	6.0	55	150	400	A / C	4.1x.y	21	1
70	28	42	2.1	6.8	1.8	170	6.5	65	150	530	A / C	4.3x.y	16	1
80	28	42	2.1	6.8	1.8	170	6.5	65	150	550	A / C	4.3x.y	16	1
90	32	48	2.4	5.2	1.7	180	7.0	65	165	590	A / C	4.4x.y	16	1
100	38	57	2.9	7.4	1.3	200	7.5	75	180	860	F	4.5x.7	6	2
150	42	63	3.2	9.9	1.1	210	8.0	85	180	1100	F	4.6x.7	6	2
200	70	105	5.3	9.7	0.9	230	8.5	90	210	1450	F	4.8x.7	6	3
250	75	113	5.6	7.9	0.8	300	9.0	85	280	1710	F	4.9x.7	6	4
300	78	117	5.9	9.1	0.7	300	9.0	90	280	1920	F	4.9x.7	6	4

Cn [µF]	I_{MAX}* [A]	I_{PK} C_w [A]	I_{PK} I_W [kA]	I_S [kA]	R_{THC} natural cooling [°C/W]	LESR [nH]	Tan MAX @50Hz [10-4]	Ø [mm]	H [mm]	Weight [g]	Mechanical solution	Part n. 416.84.	Pcs. / box	Box type
Urms= 550 V Un_{AC}= 790 V Un_{DC}= 940 V Us= 1800 V														
20	18	27	1.4	2.9	2.7	130	5.0	55	115	300	A / C	5.0x.y	28	1
30	20	30	1.5	3.3	2.2	160	5.5	55	150	350	A / C	5.1x.y	21	1
40	20	30	1.5	3.3	2.2	160	5.5	55	150	390	A / C	5.1x.y	21	1
50	22	33	1.7	4.1	2.0	160	6.0	60	150	460	A / C	5.2x.y	18	1
70	26	39	2.0	3.9	1.7	180	7.0	65	165	590	A / C	5.4x.y	16	1
80	34	51	2.6	5.3	1.3	200	7.5	75	180	820	F	5.5x.7	6	2
100	38	57	2.9	7.2	1.1	210	8.0	85	180	950	F	5.6x.7	6	2
125	38	57	2.9	7.2	1.1	210	8.0	85	180	1050	F	5.6x.7	6	2
150	70	105	5.3	5.7	0.8	300	8.5	85	280	1550	F	5.8x.7	6	4
200	70	105	5.3	5.7	0.8	300	8.5	85	280	1700	F	5.8x.7	6	4
250	76	114	5.7	8.3	0.6	320	9.0	100	280	2100	F	5.9x.7	6	5
300	76	114	5.7	8.3	0.6	320	9.0	100	280	2400	F	5.9x.7	6	5
Urms= 690 V Un_{AC}= 990 V Un_{DC} = 1350 V Us= 2600 V														
10	20	30	1.0	1.8	2.2	160	5.0	55	150	310	A / C	6.0x.y	21	1
15	20	30	1.0	1.8	2.2	160	5.0	55	150	350	A / C	6.0x.y	21	1
20	22	33	1.1	2.8	1.8	170	5.0	65	150	500	A / C	6.1x.y	16	1
30	26	39	1.3	2.9	1.7	180	5.0	65	165	560	A / C	6.2x.y	16	1
40	30	45	1.5	4.0	1.3	200	5.5	75	180	780	F	6.3x.7	6	2
50	30	45	1.5	4.0	1.3	200	5.5	75	180	850	F	6.3x.7	6	2
70	34	51	1.7	4.9	1.0	210	6.0	85	210	1150	F	6.5x.7	6	3
85	36	54	1.8	5.5	0.9	220	6.5	90	210	1400	F	6.6x.7	6	3
100	38	57	1.9	7.1	0.8	220	7.0	100	210	1680	F	6.7x.7	6	5
125	40	60	2.0	4.2	0.7	300	7.5	90	280	1860	F	6.8x.7	6	4
150	45	68	2.3	5.3	0.6	300	8.0	100	280	2150	F	6.9x.7	6	5
175	45	68	2.3	5.3	0.6	300	8.0	100	280	2360	F	6.9x.7	6	5
Urms = 930 V Un_{AC} = 1300 V Un = 1700 V Us = 3250 V														
10	18	27	0.9	1.2	2.2	160	4.5	55	150	360	A / C	9.0x.y	21	1
15	20	30	1.0	1.8	1.8	170	4.7	65	150	480	A / C	9.1x.y	16	1
20	22	33	1.1	2.6	1.7	180	5.0	65	165	550	A / C	9.2x.y	16	1
30	24	36	1.2	2.3	1.3	200	5.3	75	180	840	F	9.3x.7	6	2
35	28	42	1.4	3.1	1.1	210	5.5	75	210	980	F	9.4x.7	6	3
40	30	45	1.5	3.1	1.0	210	5.5	85	210	1150	F	9.5x.7	6	3
45	30	45	1.5	3.1	1.0	210	5.5	85	210	1220	F	9.5x.7	6	3
50	30	45	1.5	3.1	1.0	210	5.5	85	210	1280	F	9.5x.7	6	3
55	34	51	1.7	3.5	0.9	220	5.7	90	210	1380	F	9.6x.7	6	3
70	38	57	1.9	4.5	0.8	220	5.7	100	210	1720	F	9.7x.7	6	5
85	42	63	2.1	2.7	0.7	300	6.0	90	280	1840	F	9.8x.7	6	4
100	45	68	2.3	3.4	0.6	300	6.5	100	280	2250	F	9.9x.7	6	5

(**Cn**) Standard values, other values on request. Code "x": internal reference. Code "y": mechanical solution.
(*) The maximum rms current is referred to A or F solutions. Imax ≤ 16 A for C solution.

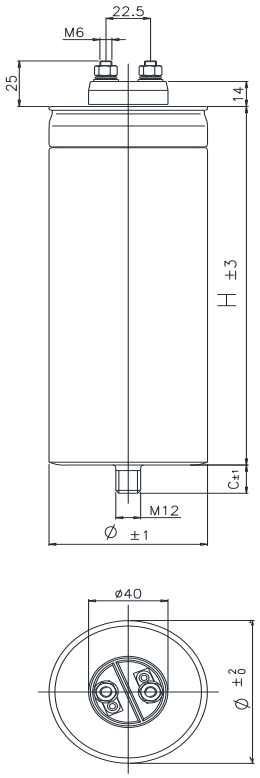

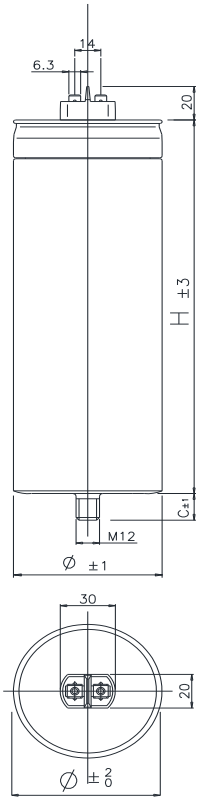

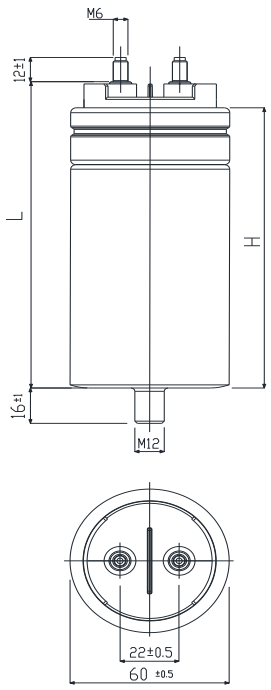

A SOLUTION
M6 Screw-type bolts
CODE: 41684.xxx.0
code "y"= 0

C SOLUTION
Double tag 6,3x0,8 mm
CODE: 41684.xxx.2
code "y"= 2

D SOLUTION (*) - Ø60
M6 screw -type bolts.
UL94 V0 plastic cover
CODE: 41684.xxx.6
code "y"= 5

Overpressure safety device
In order to ensure proper device operation, when the capacitor is installed, a clearance of at least the values given on drawing below must be left above terminals.

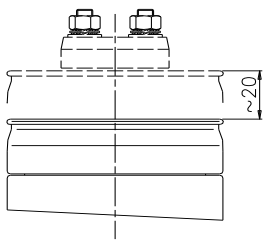

Dimention with overpressure device activated

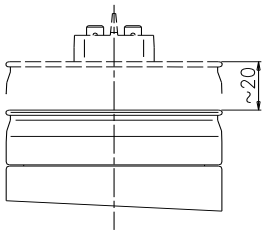

Dimention with overpressure device activated

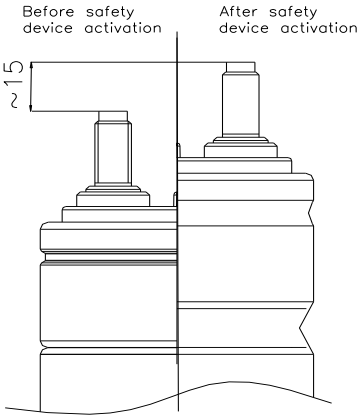

Dimention with overpressure device activated

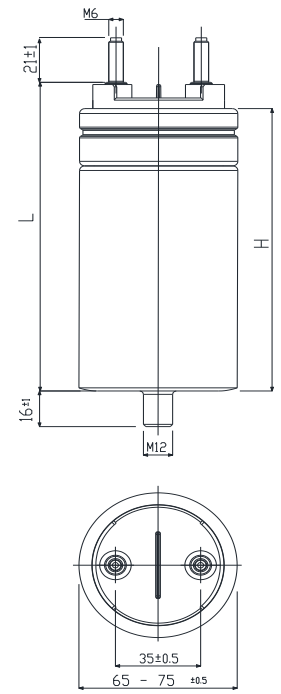

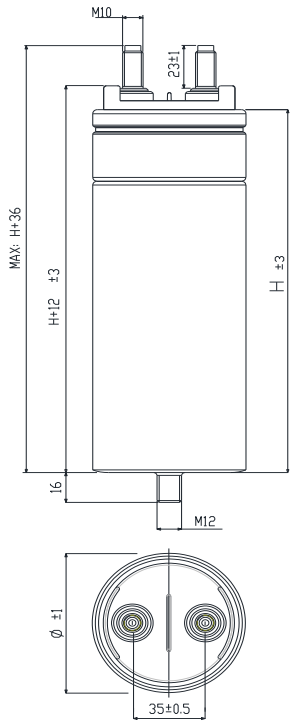

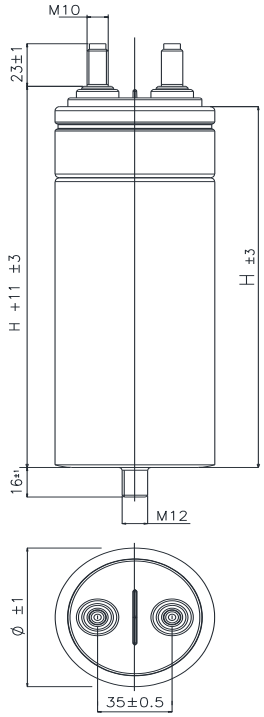

E SOLUTION (*) - Ø65/75 mm

M6 screw -type bolts.
UL94 V0 plastic cover
CODE: 41684.xxx.5
code "y"= 6

F SOLUTION - Ø75/85 mm

M10 Screw-type bolts
UL94 V0 plastic cover
CODE: 41684.xxx.7
code "y"= 7

F SOLUTION - Ø90/100 mm

M10 Screw-type bolts
UL94 V0 plastic cover
CODE: 41684.xxx.7
code "y"= 7

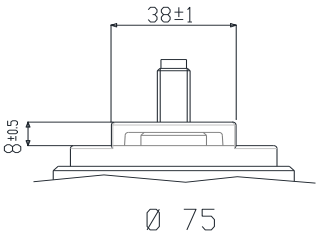

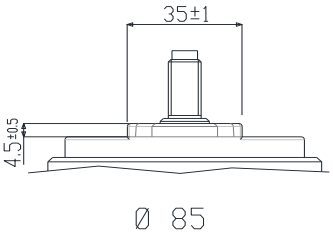

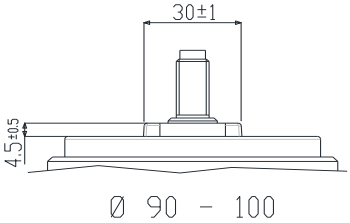

F SOLUTION

different mechanical spacing
M10 screw -type bolts, Ø75-Ø100 mm.
UL94 V0 plastic cover

Box TYPE	Standard box dimensions
1	mm 250 x 386 x 190
2	mm 190 x 285 x 265
3	mm 190 x 285 x 325
4	mm 190 x 285 x 375
5	mm 335 x 220 x 375

(*) On request, available also on different diameters.

RMS working current vs Ambient temperature

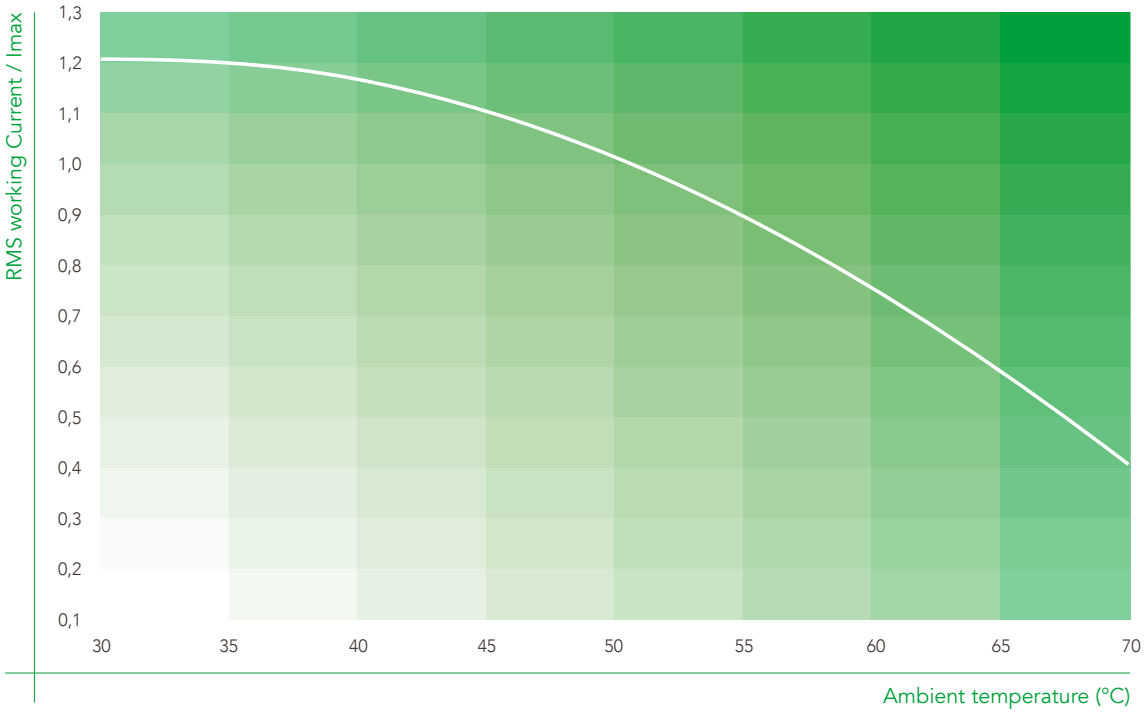

Voltage Derating vs Altitude

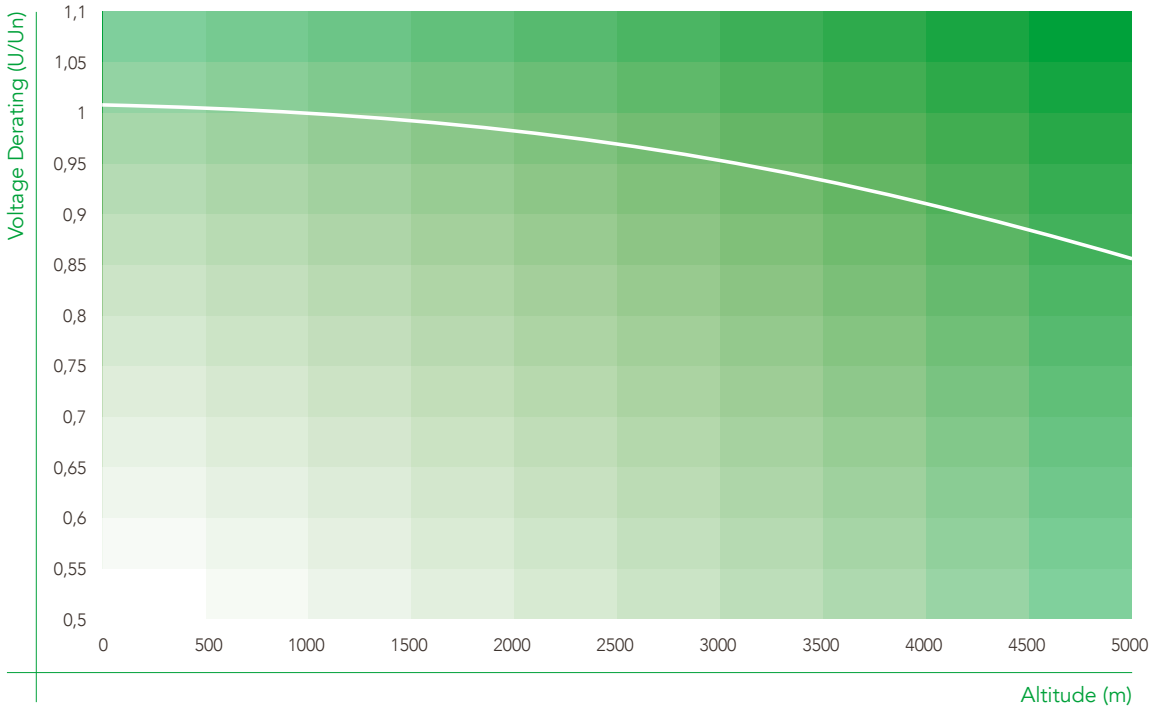

Capacitance change vs Frequency (25°C)

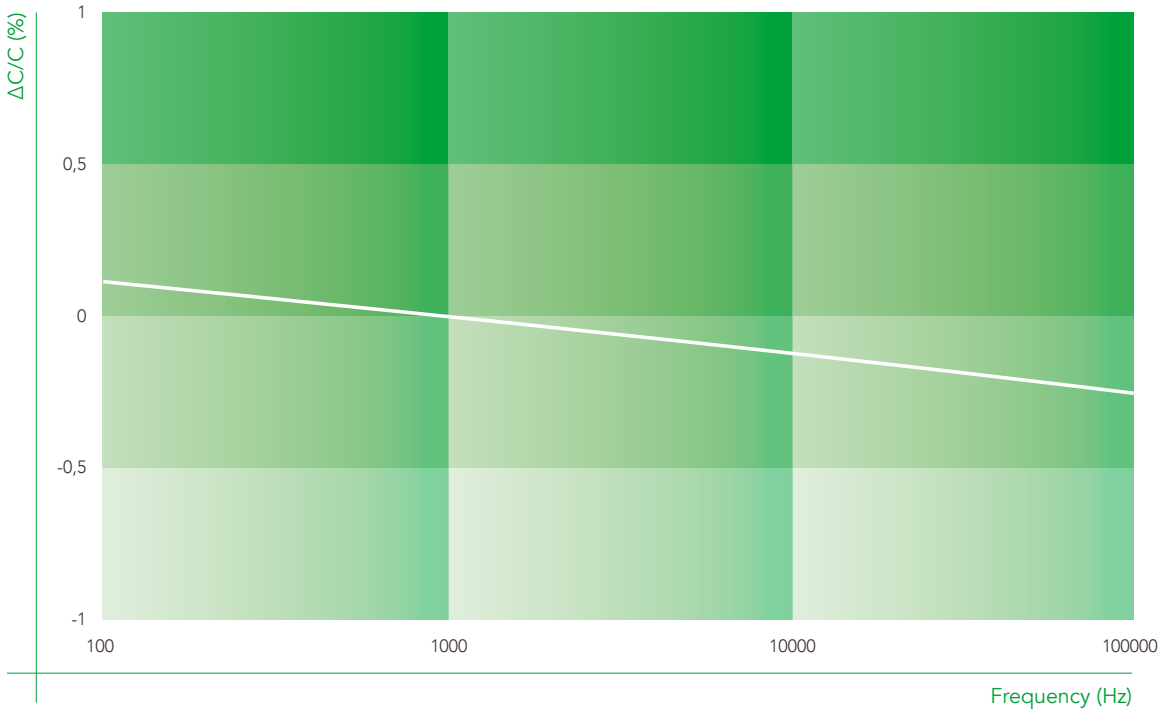

Dissipation factor change vs Frequency (25°C)

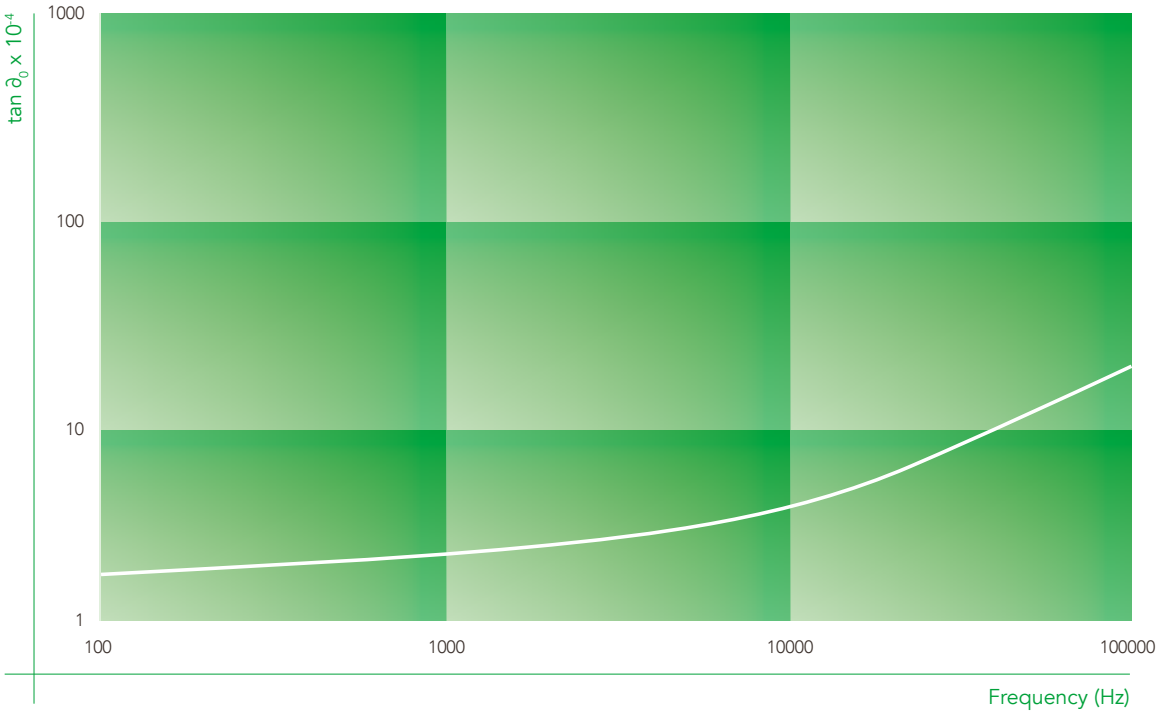

GPX 84 series

High Performance General Purpose Capacitor
Cylindrical Aluminum Case

GPX 84 single-phase, cylindrical AC & DC Capacitors are the ideal solution for High Performance applications requiring very high current capability, higher operating temperatures and a lifecycle characterised by very stable capacity values.
In addition to the sturdy construction with Aluminum case and plastic lid, the wide range of available connections and the safety features based on the integrated UL-approved overpressure disconnector and DRY resin impregnation, GPH 84 includes a fortified internal construction based on busbar connections and a special metallised film design resulting in superior current, temperature and capacity stability parameters.

Main characteristics:

- Self-Healing Metallized Polypropylene Film
- UL-Approved Overpressure Safety Device
- Aluminum Case
- DRY Resin filling
- Wide range of connections with high current capability

Main applications:

- AC Filtering
- High-Performance PFC (high harmonics, voltage and RMS/surge current)
- UPS and Wind-Power Applications

General Characteristics

Rated AC voltage (U_{RMS}) - effective	250V - 950V
Rated DC voltage (U_N)	490V - 1850V
Maximum effective current (Imax) - continuos	120 Arms
Capacitance tolerance	±10%
Series resistance (RS)	1 - 10 mΩ
Terminals	Screw type bolts - M6 / M10
Container	Aluminum
Cover	UL 94 V0 plastic cover
Film Dielectric type	Self-healing metallized polypropylene film
Maximum altitude	2000 m a.s.l.
Mounting	Any position / Indoor
Maximum torque for fixing stud	10 Nm
Maximum torque for M6 terminals	3 Nm
Maximum torque for M10 terminals	6 Nm
Working ambient temperature	-40 .. +50 °C
Operating temperature MIN/ MAX (case)	-25 .. +70 °C
Maximum Hotspot temperature	+85 °C
Storage temperature	-40 .. +85 °C
Humidity category class (DIN 40040)	F
AC test Voltage between terminals and container (to ground)	AC: 3 - 6 KV5 50Hz 10 s
Life expectancy (@Un / 70°C hot spot)	> 120.000 h
Failure quota	50FIT
Reference standards	IEC 1071-1/2
Material and insulation distance designed according to:	UL 810

Cn [µF]	I_{MAX} [A]	I_{PK} [kA]	I_S [kA]	R_{THC} natural cooling [°C/W]	R_S [mΩ]	L_S [nH]	Ø [mm]	H [mm]	Weight [g]	Technical solution	Code n. 416.84H	Pcs. / box	Box type
Urms= 250 V Un$_{AC}$ = 350 V Un$_{DC}$= 490 V Us= 950 V													
100	45	3.0	11	2.2	4.5	150	60	40	390	D	2255	18	A
150	50	3.5	13	2.0	4,0	160	60	160	530	D	2355	18	A
200	55	4.5	15	1.8	3.7	180	65	160	560	E1	2556	16	A
250	60	5.0	20	1.4	4.0	190	75	170	850	E2	2656	6	B
300	70	6.0	20	1.2	3.5	210	75	205	1100	F1	2657	6	B
400	80	8.0	20	1.1	2.9	230	85	205	1300	F2	2757	6	B
500	90	10.0	20	0.9	2.8	240	90	220	1600	F3	2857	6	C
Urms= 350 V Un$_{AC}$= 510 V Un$_{DC}$= 700 V Us= 1200 V													
100	50	3.5	8	1.7	4.8	180	65	160	640	E1	3256	16	A
200	60	5.0	14	1.0	5.6	210	85	205	1150	F2	3497	6	C
250	80	5.5	15	1.0	3.2	230	85	205	1300	F2	3557	6	C
300	90	6.0	15	0.9	2.8	240	90	220	1450	F3	3687	6	C
400	110	8.0	16	0.7	2.4	280	100	245	2150	F3	3857	6	E
450	115	9.0	18	0.6	2.6	320	100	270	2350	F3	3957	6	E
500	120	10.0	20	0.6	2.4	320	100	270	2400	F3	3987	6	E
Urms= 450 V Un$_{AC}$= 630 V Un= 850 V Us= 1600 V													
50	45	2.0	6	2.1	4.8	150	60	140	490	D	4185	18	A
100	60	3.0	8	1-3	4.3	200	75	170	850	F1	4387	6	B
150	75	4.0	10	1.1	3.3	210	90	170	1150	F3	4487	6	B
200	95	6.0	12	0.9	2.5	240	90	220	1550	F3	4697	6	C
250	100	6.5	14	0.8	2.5	310	90	270	1950	F3	4757	6	D
300	110	6.8	15	0.6	2.8	320	100	270	2350	F3	4857	6	E
400	120	9.0	20	0.4	3.5	400	100	360	3050	F3	4957	6	F

(**Cn**) Standard values, other values on request.
Standard capacitance tolerance: ±10%. Other tolerance values on request

Cn [µF]	I_{MAX} [A]	I_{PK} [kA]	I_S [kA]	R_{THC} natural cooling [°C/W]	R_S [mΩ]	L_S [nH]	Ø [mm]	H [mm]	Weight [g]	Technical solution	Code n. 416.84H	Pcs. / box	Box type
Urms= 550 V Un_{AC} = 790 V Un_{DC}= 940 V Us= 1800 V													
30	35	1.6	5	2.1	7.8	150	60	140	490	D	5185	18	A
50	45	2.4	7	1.3	7.6	200	75	170	870	E2	5256	6	B
70	60	3.2	8	1.1	5.1	230	75	205	1050	F1	5277	6	C
100	75	4.0	10	1.0	3.6	230	85	205	1300	F2	5387	6	C
150	90	5.0	12	0.8	3.1	310	90	270	1950	F3	5487	6	D
200	105	6.4	14	0.6	3.1	320	100	270	2350	F3	5567	6	E
250	110	8.2	15	0.4	4.2	400	100	360	3050	F3	5747	6	F
300	120	10.0	20	0.4	3.5	400	100	360	3100	F3	5897	6	F
Urms= 730 V Un_{AC}= 1050 V Un_{DC}= 1450 V Us= 2600 V													
10	35	0.8	2.2	2.1	7.8	150	60	140	490	D	6045	18	A
30	50	1.5	4	1.3	6.2	200	75	170	880	E2	6286	6	B
50	70	2,5	8	1.0	4.1	230	85	205	1350	F2	6357	6	B
70	90	3.6	10	0.9	2.8	250	90	245	1700	F3	6557	6	C
100	100	5.0	12	0.7	2.9	300	100	245	2150	F3	6697	6	E
125	110	6.2	12.6	0.6	2.8	320	100	270	2350	F3	6897	6	E
150	120	7.5	18	0.4	3.5	400	100	360	3100	F3	6977	6	F
Urms= 950 V Un_{AC}= 1350 V Un= 1850 V Us= 3300 V													
10	32	0.8	3.0	1.8	10.9	170	65	160	480	E1	9166	16	A
20	45	1.4	3.0	1.1	9.0	230	75	205	1050	F1	9287	6	B
30	55	1.8	5.0	1.0	6.7	230	85	205	1350	F2	9397	6	B
50	60	3.0	7.0	0.8	7.0	310	90	270	1950	F3	9597	6	E
65	80	4.2	10.0	0.6	5.3	320	100	270	2350	F3	9697	6	E
80	90	5.0	12.0	0.4	6.2	400	100	360	3050	F3	9797	6	F
90	110	6.0	15.0	0.4	4.2	400	100	360	3100	F3	9897	6	F

(**Cn**) Standard values, other values on request.
Standard capacitance tolerance: ±10%. Other tolerance values on request

Box TYPE	Standard box dimensions
A	mm 190 x 250 x 386
B	mm 190 x 285 x 265
C	mm 190 x 285 x 325
D	mm 190 x 285 x 375
E	mm 220 x 335 x 375
F	mm 220 x 335 x 450

Box TYPE	D	E1	E2	F1	F2	F3
Min. Creepage distance (mm)	30	32	32	28	28	28
Min. Clearance distance (mm)	14	21	21	20	20	20

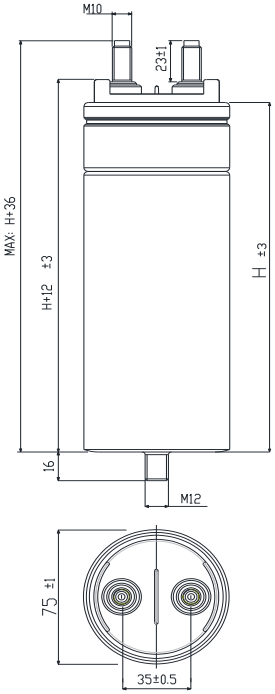

Ø75 M10 F1

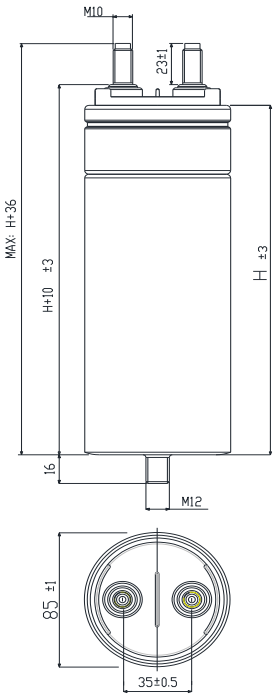

Ø85 M10 F2

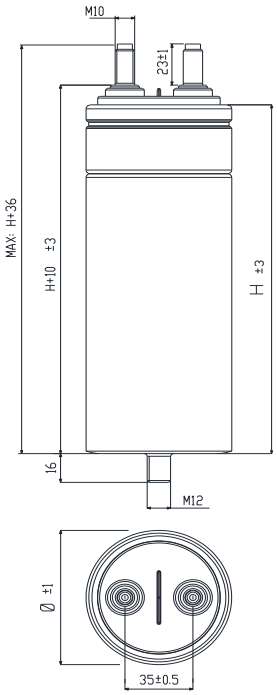

Ø90 - 100 - (116)
M10 F3

Overpressure safety device

In order to ensure proper device operation, when the capacitor is installed, a clearance of at least the values given on drawing below must be left above terminals.

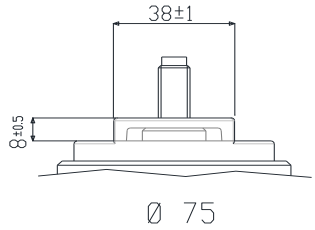

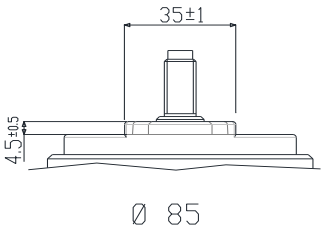

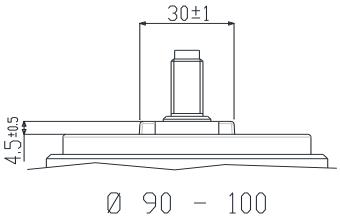

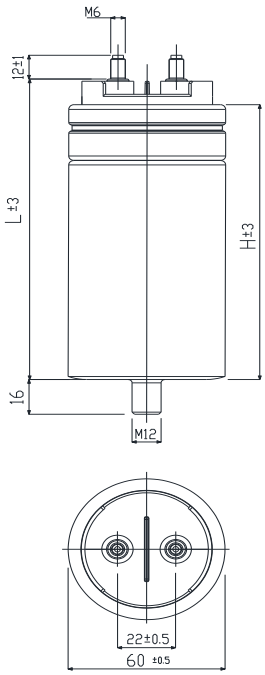

Ø60 M6 D

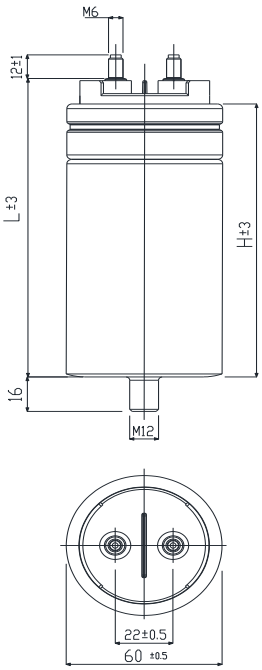

Ø65 M6 E1

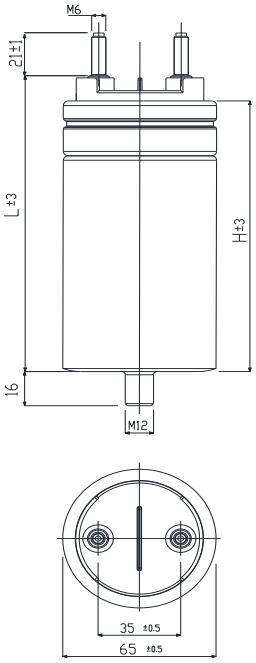

Ø75 M6 E2

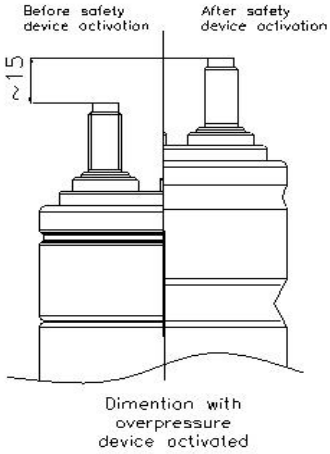

GP 42 series

Compact General Purpose Capacitors
Cylindrical Aluminum Case

With its compact size and simple construction, GP42 is an efficient solution for AC Filtering applications requiring relatively low capacities and currents.

Main characteristics:

- Self-Healing Metallized Polypropylene Film
- UL-Approved Overpressure Safety Device
- Aluminum Case
- DRY Resin filling

Main applications:

- AC Filtering
- High-Performance PFC (high harmonics, voltage and RMS/surge current)
- UPS and Wind-Power Applications

General Characteristics

RMS Voltage range	250 ÷ 930 V
Capacitance range	0.1÷100 µF
Capacitance tolerance	±5% / ±10%
Max. RMS current	10 A / 16 A
Maximum working frequency	10 kHz
Thermal resistance natural cooling (RTHc)	< 12 °C/W
Series resistance (RS)	< 5 mΩ
Terminals	Single or double tag 6.3x0.8 mm
Working temperature	–40 / +70 °C
Storage temperature	–40 / +85 °C
Test voltage	U_{tc}= 3 kVac / 6 kVac @50 Hz 10 s U_{tt}= 1.5 x UnDC 10 s
Filling	Dry polyurethane resin
Dielectric	Metallized PPM film
Cylindrical case	Aluminum
Life expectancy	80.000 h (*)
Failure quota	300/10E9
Reference standards	IEC 1071-1/2 - UL 810
Overpressure Safety Device	Integrated
M8 fixing bolt	Max 5 Nm
M12 fixing bolt	Max 10 Nm

Life expectancy	4.16.42.1xxx Series	4.16.42.2xxx Series	4.16.42.3xxx Series	4.16.42.4xxx Series	4.16.42.6xxx Series	4.16.42.9xxx Series
80.000 h (rated)	250 V	330 V	450 V	550 V	690 V	930 V
40.000 h	275 V	360 V	500 V	575 V	760 V	1025 V
20.000 h	300 V	400 V	540 V	630 V	830 V	1120 V
10.000 h	330 V	450 V	600 V	690 V	930 V	1250 V

(*) Life Derating at operating voltage (according to the chart on page 75).

Cn [µF]	I_{MAX} [A]	I_{PK} C_w [A]	I_{pk} I_w [kA]	dV/dTmax [V/µs]	R_{THC} natural cooling [°C/W]	Tan MAX @50Hz [10-4]	Ø [mm]	H [mm]	Weight [g]	Part n. 416.42.	Pcs. / box	Box type
Urms= 250 V Un_{AC}= 350 V Un_{DC}= 490 V Us= 840 V												
2	5.0	8	0.1	50	11.7	3.5	25	60	40	1.05.x	250	6
5	6.5	10	0.3	50	9.4	4.0	30	60	50	1.23.x	200	6
10	7.5	11	0.5	45	6.8	4.5	35	72	80	1.42.x	100	7
15	8.0	12	0.7	45	5.8	5.0	40	72	100	1.55.x	100	6
20	8.5	13	0.7	30	4.5	5.5	40	98	140	1.63.x	50	7
25	8.5	13	0.8	30	4.5	5.5	40	98	150	1.68.x	50	7
30	9.0	14	1.0	30	3.9	5.5	40	98	170	1.69.x	50	7
40	10.0	15	0.9	20	3.3	6.0	45	122	220	1.82.x	25	7
50	10.0	15	1.1	20	3.3	6.0	45	122	230	1.89.x	25	7
60	10.0	15	1.3	20	2.9	6.0	50	122	270	1.92.x	25	7
70	10.0	15	1.5	20	2.6	6.5	55	122	320	1.95.x	25	6
80	10.0	15	1.5	20	2.6	6.5	55	122	330	1.97.x	25	6
100	10.0	15	1.7	15	2.1	7.0	60	137	420	1.99.x	25	6
Urms= 330 V Un_{AC}= 470 V Un= 600 V Us= 1120 V												
1	5.0	8	0.1	50	11.7	3.5	25	60	40	2.03.x	250	6
2	6.0	9	0.2	70	10.4	3.5	30	53	50	2.12.x	200	7
5	7.0	11	0.3	50	7.8	4.5	35	60	80	2.39.x	125	6
10	8.0	12	0.5	45	5.8	5.0	40	72	100	2.49.x	100	6
15	8.5	13	0.5	30	4.5	5.5	40	98	140	2.58.x	50	7
20	9.0	14	0.7	30	3.9	5.5	45	98	180	2.68.x	50	6
25	10.0	15	0.6	20	3.3	6.0	45	122	220	2.75.x	25	7
35	10.0	15	0.8	20	2.9	6.5	50	122	270	2.88.x	25	7
50	10.0	15	0.8	15	2.4	6.5	55	132	350	2.94.x	25	6
60	10.0	15	1.0	15	2.1	7.0	60	137	430	2.98.x	25	6
Urms= 450 V Un_{AC}= 640 V Un= 890 V Us= 1400 V												
1	5.0	8	0.1	50	11.7	3.5	25	60	40	3.08.x	250	6
2	6.5	10	0.1	50	9.4	4.0	30	60	50	3.29.x	200	6
5	8.0	12	0.2	45	5.8	5.0	40	72	100	3.47.x	100	6
10	8.5	13	0.3	30	4.5	5.5	40	98	140	3.58.x	50	7
15	10.0	15	0.3	20	3.3	6.0	45	122	220	3.77.x	25	7
20	10.0	15	0.4	20	2.9	6.5	50	122	270	3.88.x	25	7
25	10.0	15	0.4	15	2.4	6.5	55	132	350	3.92.x	25	6
30	10.0	15	0.5	15	2.4	6.5	55	132	360	3.95.x	25	6
35	10.0	15	0.6	15	2.1	7.0	60	137	430	3.97.x	25	6
40	10.0	15	0.7	15	2.1	7.0	60	137	440	3.99.x	25	6

GP 42 series

Compact General Purpose Capacitors

Cn [µF]	I_{MAX} [A]	I_{PK} C_w [A]	I_{pk} I_w [kA]	dV/dTmax [V/µs]	R_{THC} natural cooling [°C/W]	Tan MAX @50Hz [10-4]	Ø [mm]	H [mm]	Weight [g]	Part n. 416.42.	Pcs. / box	Box type
Urms= 550 V Un_{AC}= 780 V Un_{DC}= 940 V Us= 1680 V												
1	7.0	11	0.1	60	6.3	3.0	30	98	70	4.10.x	125	6
2	7.0	11	0.1	60	5.2	3.0	30	98	80	4.15.x	125	6
5	8.5	13	0.3	60	4.5	3.5	40	98	140	4.33.x	50	7
10	9.5	14	0.7	60	3.5	4.0	50	98	220	4.58.x	25	7
15	10.0	15	0.7	40	2.4	4.5	55	132	360	4.63.x	25	6
20	10.0	15	0.9	40	2.4	4.5	55	132	370	4.68.x	25	6
25	10.0	15	1.1	40	2.1	5.0	60	137	420	4.78.x	25	6
35	10.0	15	1.0	25	1.7	5.5	60	181	560	4.88.x	18	6
Urms= 690 V Un_{AC}= 990 V Un= 1350 V Us= 2240 V												
0.68	7.0	11	0.1	60	6.3	3.0	30	98	80	6.12.x	125	6
1	7.0	11	0.1	60	6.3	3.0	30	98	90	6.15.x	125	6
2	8.0	12	0.1	60	5.2	3.0	35	98	110	6.23.x	50	7
5	9.5	14	0.3	60	3.5	4.0	50	98	220	6.51.x	25	7
8	10.0	15	0.4	40	2.4	4.5	55	132	360	6.62.x	25	6
10	10.0	15	0.4	40	2.4	4.5	55	132	370	6.68.x	25	6
12	10.0	15	0.7	40	2.1	5.0	60	137	420	6.74.x	25	6
20	10.0	15	0.6	25	1.7	5.5	60	181	560	6.88.x	18	6
Urms= 930 V Un_{AC}= 1300 V Un= 1700 V Us= 2800 V												
0.68	8.5	13	0.1	60	3.9	3.0	40	115	160	9.10.4	50	7
1	8.5	13	0.1	60	3.9	3.0	40	115	170	9.14.4	50	7
2	8.5	13	0.1	60	3.9	3.0	40	115	190	9.18.4	50	7
5	10.5	16	0.3	60	2.7	4.0	55	115	300	9.49.4	25	6
8	12.0	18	0.4	40	2.0	4.5	60	150	470	9.61.4	25	6
10	14.0	21	0.4	40	1.8	5.0	65	150	550	9.75.4	20	6
12	16.0	24	0.5	35	1.7	5.5	65	165	600	9.85.4	15	6
14	16.0	24	0.5	35	1.7	5.5	65	165	620	9.89.4	15	6

(Cn) Standard values, other values on request.
Code "x": according to the mechanical configuration, see figures at page 17 (only for A solution).

Box TYPE	Standard box dimensions
6	mm 195 x 390 x 250
7	mm 195 x 390 x 200

STUD	Capacitor diameter
M8	Ø 25 - 30 - 40 - 45 - 50
M12	Ø 55 - 60

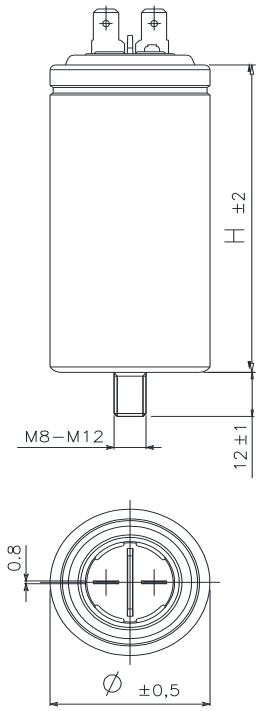

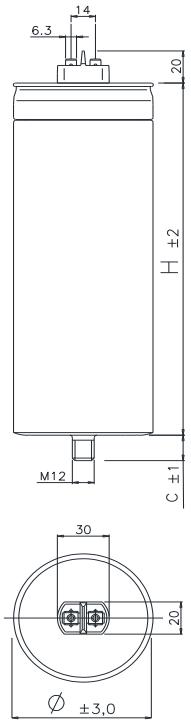

Example of cover configuration - A solution
according as shown in "Table 1", the code "x" in this example cover configuration is equal to "3": 6,3x0,8 single tag terminals

Cover configuration - B solution
for this type of solution, is set only x = 4
configuration: 6,3x0,8 double tag terminals

C is equal to 12 mm for diameter up to Ø 60 mm. For higher diameter , C is equal to 16 mm.

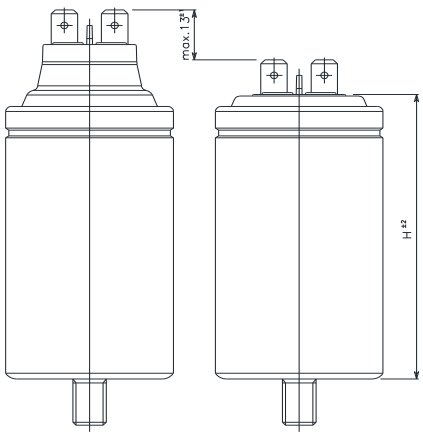

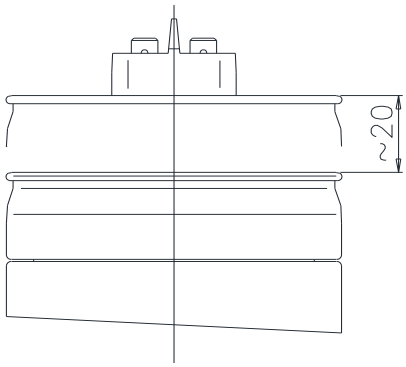

A SOLUTION

Overpressure safety device

In order to ensure proper device operation, when the capacitor is installed, a clearance of at least 10mm must be left above terminals.

B SOLUTION

Overpressure safety device

In order to ensure proper device operation, when the capacitor is installed, a clearance of at least 20mm must be left above terminals.

Fig. 1

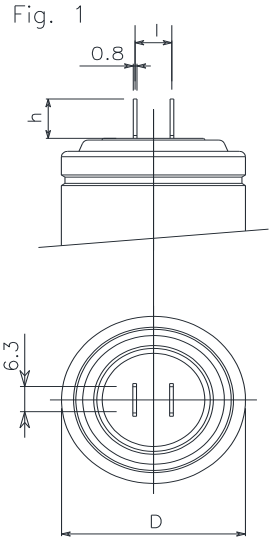

CODE .x. = 1

Fig. 2

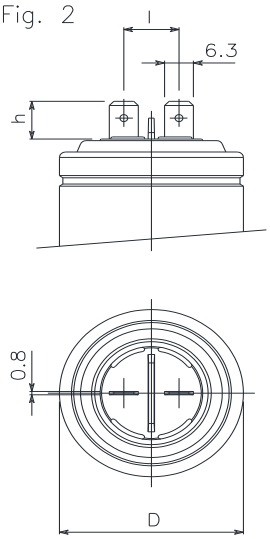

CODE .x. = 2

Fig. 3

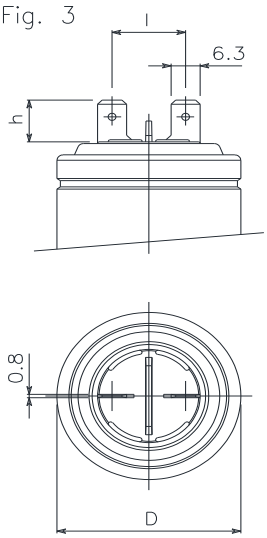

CODE .x. = 3

Fig. 4

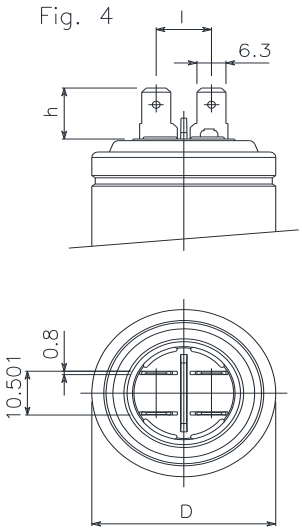

CODE .x. = 4

Capacitance Cn [µF]	Fig 1		Fig 2		Fig 3		Fig 4	
	h (mm)	h (mm)	h (mm)	h (mm)	h (mm)	h (mm)	h (mm)	h (mm)
25	10.9	8						
30	10.9	8	9	12				
35			9	12			12.2	12
40			9	12	10	16	12.2	12
45			9	12	10	16	12.2	12
50			9	12	10	16	12.2	12
55			9	12	10	16	12.2	12
60			8.9	15.5			12	20.5

CAPACITORS FOR DC AND PULSE APPLICATION

DCH 85 C series

Very High Density, Low Inductance DC-Link Capacitors
Cylindrical Aluminum Case

Thanks to the exclusive Ducati Energia High Crystallinity Film DCH 85 C DC-link Capacitors provide leading Capacity Density without any de-rating or limitation, respective to standard makes.

The very high capacity density allows substantial cost reductions due to the reduction of capacitor size and/or number, as well as particularly low inductance values.
The exclusive Ducati Energia metallization profiles guarantee high capacity stability and a controlled, open-circuit condition at the end of DCH 85 C operational life, while maximizing the current capability.

Main characteristics:

- Self-Healing Metallized Polypropylene Film
- UL-Approved Overpressure Safety Device
- Aluminum Case
- DRY Resin filling

Main applications:

- DC-Link
- Energy Storage / Pulse Generation

General Characteristics

DC Voltage range	700÷2100 V
Maximum ripple voltage	1150 V
Maximum ripple current	100 A
Capacitance range	Up to 5600 µF
Capacitance tolerance	standard: ±10% on request ±5%
Series resistance (RS)	< 4.5 mΩ
Maximum Voltage rate of rise (dV/dT)	≤ 40 V/µs
Terminals	M6 internal threads M8 screw types bolts
Voltage test	U_{tc}= 3.5 kVac @50 Hz 10 s U_{tt}= 1.5 x UnDC 10 s
Working temperature ($\theta_{MIN} - \theta_{MAX}$)	–25 / +85 °C
Storage temperature	–25 / +85 °C
Filling	Dry polyurethane resin
New PP Dielectric	Self healing. PPMdh film
Cylindrical case	Aluminum
Failure quota	50/10 E9
Life expectancy	100.000 h(*)
Maximum altitude	2000 m a.s.l.
Reference standard	IEC 1071-1/2 - IEC 1881 - UL 810
Internal thread terminals	Max 3 Nm
M8 screw terminals	Max 6 Nm
M12 fixing bolt	Max 12 Nm
UL - CSA approved (c UL us)	File n. E192559
In according to fire protection standard	EN 45545-2 (only for 85 and 100mm diameters)

(*) For details please refer to page 75.

Safety system: These capacitors are designed with a particular type of polypropylene metalized film (PPMd film) that assures an open circuit at the end of life, if the operation is within the specification.

Capacitance Cn [µF]	Diameter Ø [mm]	Height H [mm]	Max. RMS Current I_{MAX} [A]	Repet Peak Current Ip [A]	Surge Current Is [kA]	Series Resistance Rs [mΩ]	Thermal Resistance R_{THC} [°C/W]	Series Inductance Lesr [nH]	Weight [kg]	Pcs./box - Box type	Part n. 416.85.V.
Un_{DC}= 700 V Ur= 320 V Up= 1050 V Us= 1470V											
480	75	105	25	1500	5.0	3.8	5.4	< 45	0.6	12 - A	009.x
750	75	140	30	2200	6.5	3.6	4.8	< 50	0.8	6 - B	019.x
840	75	155	35	2200	7.0	3.0	4.6	< 60	0.9	6 - B	029.x
980	85	140	35	3000	7.5	2.9	4.2	< 50	1.0	6 - B	039.x
1050	90	140	40	3000	8.0	2.8	4.0	< 50	1.1	6 - B	045.x
1100	85	155	40	3000	9.0	2.7	3.6	< 60	1.1	6 - B	049.x
1800	100	185	65	3700	11.0	1.6	2.6	< 60	1.8	6 - C	055.x
2500	116	185	70	4000	12.0	1.4	2.3	< 60	2.3	4 - G	059.x
2700	100	255	70	4200	13.0	1.2	2.3	< 75	2.4	6 - D	069.x
3700	116	255	75	5800	15.0	1.0	2.1	< 75	3.2	4 - G	079.x
4300	116	285	80	6700	18.0	0.8	1.7	< 80	3.6	4 - G	089.x
5600	116	373	100	10000	22.0	0.7	1.6	< 90	4.8	4 - G	095.x
Un_{DC}= 900 V Ur= 550 V Up= 1350 V Us= 1900 V											
340	75	105	28	2200	6.6	3.9	5.4	< 45	0.6	12 - A	109.x
500	75	140	30	2800	8.4	3.7	4.8	< 50	0.8	6 - B	119.x
600	75	155	35	3200	9.6	3.2	4.6	< 60	0.9	6 - B	129.x
680	85	140	35	3300	10.0	3.1	4.2	< 50	1.0	6 - B	135.x
780	90	140	40	3500	10.0	3.0	4.0	< 50	1.1	6 - B	139.x
800	85	155	40	3800	11.5	2.9	3.6	< 60	1.1	6 - B	149.x
1300	100	185	65	5400	16.0	1.8	2.6	< 60	1.8	6 - C	155.x
1850	116	185	70	6600	20.0	1.7	2.3	< 60	2.3	4 - G	159.x
2000	100	255	70	7000	21.0	1.6	2.3	< 75	2.4	6 - D	169.x
2700	116	255	75	7100	21.0	1.3	2.1	< 75	3.2	4 - G	179.x
3200	116	285	85	8200	24.5	1.2	1.7	< 80	3.5	4 - G	189.x
4500	116	373	100	10000	28.0	1.0	1.6	< 90	4.6	4 - G	195.x
Un_{DC}= 1100 V Ur= 700 V Up= 1650 V Us= 2300 V											
260	75	105	30	2200	6.7	4.1	5.4	< 45	0.7	12 - A	219.x
400	75	140	35	2400	7.1	3.8	4.8	< 50	0.8	6 - B	239.x
520	85	140	35	3400	10.3	3.6	4.2	< 50	1.0	6 - B	249.x
600	90	140	40	3600	10.3	3.5	4.0	< 50	1.1	6 - B	259.x
680	90	155	40	3900	11.7	3.5	3.6	< 60	1.3	6 - B	269.x
1000	100	185	65	5300	15.8	2.2	2.6	< 70	1.8	6 - C	279.x
1400	116	185	70	7300	21.8	2.0	2.3	< 70	2.3	4 - G	285.x
1500	100	255	70	7800	23.3	1.9	2.3	< 75	2.4	6 - D	289.x
1600	100	285	75	8100	24.3	1.8	2.2	< 80	2.6	6 - E	291.x
2100	116	255	75	9900	29.7	1.4	2.1	< 75	3.2	4 - G	293.x
2300	100	373	100	10500	31.7	1.2	1.8	< 90	3.5	6 - F	295.x
2400	116	285	85	10000	30.0	1.5	1.7	< 80	3.6	4 - G	297.x
3.200	116	373	100	11550	30.0	1.1	1.6	< 90	4.7	4 - H	299.x

DCH 85 C series

Very High Density, Low Inductance DC-Link Capacitors
Cylindrical Aluminum Case

Capacitance Cn [µF]	Diameter Ø [mm]	Height H [mm]	Max. RMS Current I_{MAX} [A]	Repet Peak Current Ip [A]	Surge Current Is [kA]	Series Resistance Rs [mΩ]	Thermal Resistance R_{THC} [°C/W]	Series Inductance Lesr [nH]	Weight [kg]	Pcs./box - Box type	Part n. 416.85.V.
Un_{DC}= 1350 V Ur= 850 V Up= 2000 V Us= 2800V											
170	75	105	30	2160	6.5	4.2	5.4	< 45	0.6	12 - A	319.x
250	75	140	35	3240	9.7	3.9	4.8	< 50	0.8	6 - B	329.x
340	85	140	35	3960	11.9	3.7	4.2	< 50	1.0	6 - B	339.x
380	85	155	40	4200	12.6	3.6	3.6	< 60	1.1	6 - B	350.x
500	90	185	65	5200	16.0	3.1	2.8	< 70	1.5	6 - C	355.x
640	100	185	65	5850	17.6	2.3	2.6	< 70	1.8	6 - C	360.x
880	116	185	70	8100	24.3	2.1	2.3	< 70	2.4	4 - G	365.x
960	100	255	70	8500	25.5	2.0	2.3	< 75	2.4	6 - D	370.x
1100	100	285	75	9200	27.6	1.9	2.2	< 80	2.6	6 - E	380.x
1350	116	255	75	11900	30.0	1.7	2.1	< 75	3.2	4 - G	385.x
1450	100	373	100	13500	32.0	1.3	1.8	< 90	3.5	6 - F	389.x
1550	116	285	85	12800	32.0	1.7	1.7	< 80	3.5	4 - G	393.x
2000	116	373	100	14400	32.0	1.3	1.6	< 90	4.4	4 - H	398.x
Un_{DC}= 1600 V Ur= 990 V Up= 2400 V Us= 3100 V											
120	75	105	30	2160	6.5	4.3	5.4	< 45	0.6	12 - A	419.x
180	75	140	35	3240	9.7	4.0	4.8	< 50	0.8	6 - B	420.x
230	85	140	35	4000	12.0	3.9	4.2	< 50	1.0	6 - B	430.x
260	85	155	40	4200	12.0	3.8	4.0	< 50	1.2	6 - B	435.x
350	90	185	40	4480	13.5	3.7	3.6	< 60	1.5	6 - B	440.x
450	100	185	65	7200	21.6	2.3	2.6	< 70	1.8	6 - C	450.x
530	90	255	70	8500	25.0	2.2	2.4	< 70	2.3	6 - D	453.x
620	116	185	70	9750	29.5	2.2	2.3	< 70	2.4	4 - G	455.x
680	100	255	70	9800	30.0	2.1	2.3	< 75	2.5	6 - D	460.x
780	100	285	75	11200	32.0	2.0	2.2	< 80	2.7	6 - E	470.x
930	116	255	75	12740	32.0	1.8	2.1	< 75	3.2	4 - G	475.x
1000	100	373	100	12600	32.0	1.3	1.8	< 90	3.5	6 - F	485.x
1100	116	285	85	13800	32.0	1.8	1.7	< 80	3.6	4 - G	489.x
1400	116	373	100	14500	32.0	1.4	1.6	< 90	4.7	4 - H	495.x

Capacitance Cn [µF]	Diameter Ø [mm]	Height H [mm]	Max. RMS Current I_{MAX} [A]	Repet Peak Current Ip [A]	Surge Current Is [kA]	Series Resistance Rs [mΩ]	Thermal Resistance R_{THC} [°C/W]	Series Inductance Lesr [nH]	Weight [kg]	Pcs./box - Box type	Part n. 416.85.V.
Un_{DC}= 1900 V Ur= 1150 V Up= 2700 V Us= 3100 V											
85	75	105	30	2250	6.5	4.4	5.4	< 45	0.6	12 - A	519.x
130	75	140	35	2940	9.7	4.1	4.8	< 50	0.8	6 - B	520.x
170	85	140	35	3600	12.0	4.0	4.2	< 50	1.0	6 - B	530.x
200	85	155	40	4200	13.5	3.8	3.6	< 60	1.1	6 - B	540.x
230	90	155	45	5000	15.0	3.4	3.3	< 60	1.2	6 - B	545.x
330	100	185	65	7000	21.6	2.3	2.6	< 70	1.9	6 - C	550.x
380	90	255	70	7500	25.0	2.2	2.4	< 70	2.1	6 - D	557.x
450	116	185	70	8460	29.5	2.3	2.3	< 70	2.4	4 - G	555.x
500	100	255	70	9000	30.0	2.2	2.3	< 75	2.4	6 - D	560.x
570	100	285	75	9600	32.0	2.0	2.2	< 80	2.6	6 - E	570.x
680	116	255	75	11200	32.0	1.9	2.1	< 75	3.2	4 - G	575.x
740	100	373	100	12000	32.0	1.4	1.8	< 90	3.3	6 - F	580.x
780	116	285	85	13120	32.0	1.9	1.7	< 80	3.6	4 - G	585.x
1030	116	373	100	14700	32.0	1.4	1.6	< 90	4.6	4 - H	598.x
Un_{DC}= 2100 V Ur= 1150 V Up= 2700 V Us= 3100 V											
60	75	105	30	2100	6.5	4.5	5.4	< 45	0.6	12 - A	610.x
90	75	140	35	3000	9.7	4.2	4.8	< 50	0.8	6 - B	620.x
125	85	140	35	3375	12.0	4.1	4.2	< 50	1.0	6 - B	630.x
145	85	155	40	3450	12.0	3.9	3.6	< 60	1.1	6 - B	640.x
160	90	155	45	3900	13.5	3.4	3.3	< 60	1.3	6 - B	645.x
210	100	185	65	4800	15.0	2.3	2.6	< 70	1.5	6 - C	650.x
290	90	255	70	6500	21.6	2.1	2.4	< 70	2.2	6 - D	653.x
320	116	185	70	6800	25.0	2.2	2.3	< 70	2.4	4 - G	655.x
360	100	255	70	7400	29.5	2.1	2.3	< 75	2.3	6 - D	660.x
420	100	285	75	9600	30.0	2.0	2.2	< 80	2.7	6 - E	670.x
510	116	255	75	10750	32.0	2.0	2.1	< 75	3.3	4 - G	675.x
540	100	373	100	11500	32.0	1.4	1.8	< 90	3.5	6 - F	680.x
580	116	285	85	12500	32.0	1.9	1.7	< 80	3.6	4 - G	685.x
760	116	373	100	14400	32.0	1.5	1.6	< 90	4.7	4 - H	698.x

NOTES:
(**Cn**) Tollerance standard value: ±10%. Other tollerance values on request.
(**Cn**) - (**Un**) Capacitance and rated voltage standard values, other values on request.
(**Ur**) Maximum peak to peak alternating voltage component on the DC working voltage.
(**Rs**) Releted at 1 kHz.
(**R_{THC}**) Thermal registance CASE TO AMBIENT in natural cooling environment.
(**Imax**) Maximum RMS current, refered to an ambient temperature of 50 °C (**natural cooling**) and working frequency of 1 KHz.
(**x code**) According to the terminal type: x=0--> A SOLUTION (**internal thread M6**) / x=1 B SOLUTION (**M8 screw type bolts**).

Mechanical Standard configuration:

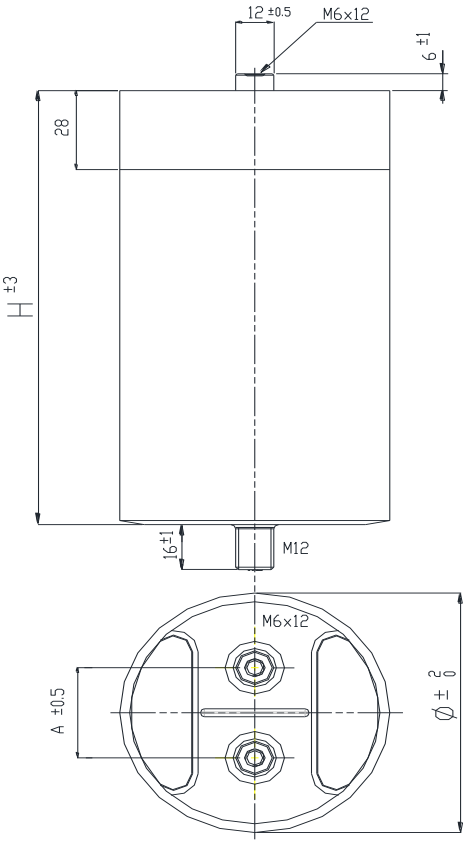

Terminal variations on request:

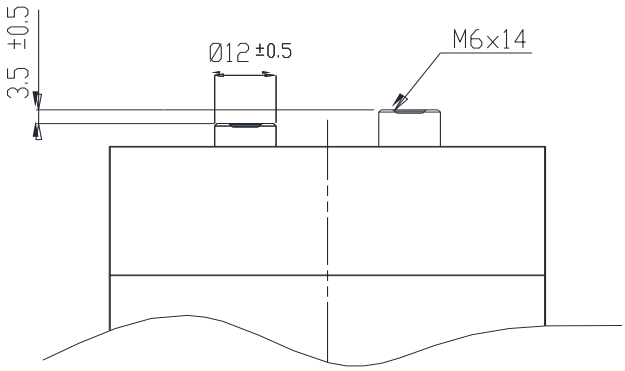

Two different terminals height for special BUS BAR coupling.

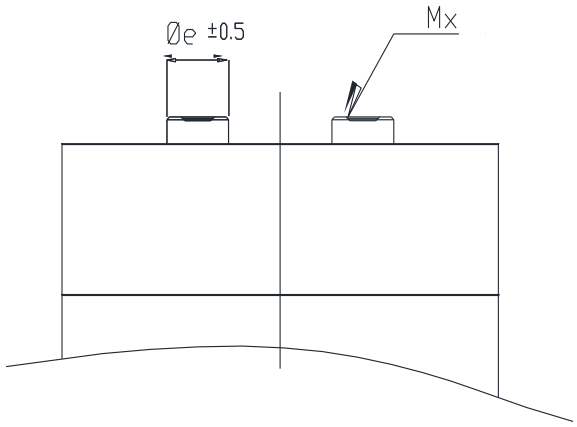

For Capcictor diameter Ø 116 and Ø 136 mm are available these different terminals type:
- Øe : 12 - 14 - 16 mm
- Mx : M6 - M8

Diameter Ø	A spacing	Type of terminals	Insulating spacing	
(mm)	(mm)		Surface (mm)	Air (mm)
75, 85, 100	32	M6 female / M8 male	36	20
90	45 (*)	M6 female / M8 male	49	33
116, 136	50 (**)	M6 - M8 female / M8 male	54	38

(*) Available also in the dimensions: 32 - 50 mm
(**) Available also in the dimensions: 32 - 45 mm

RMS working current vs Ambient temperature

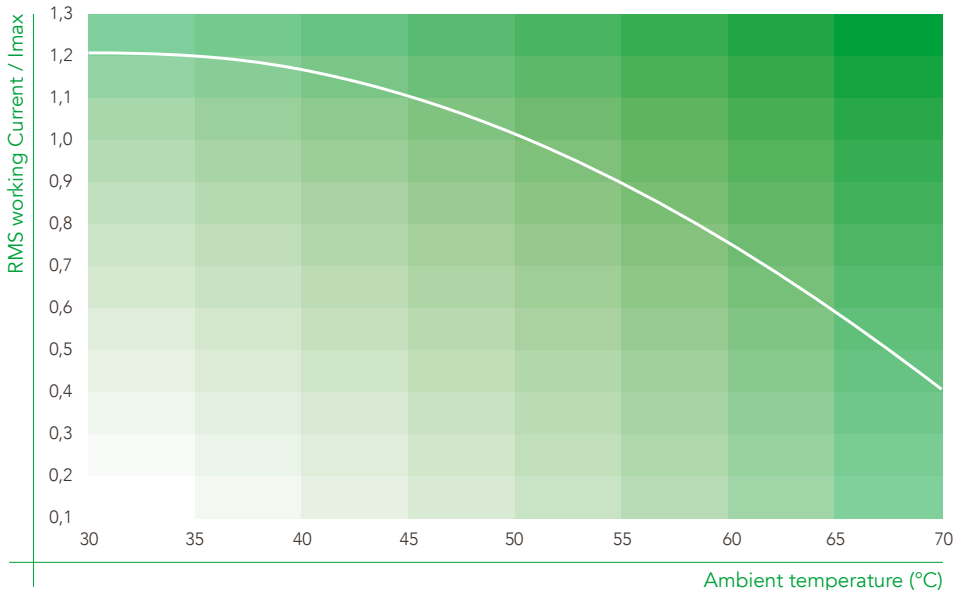

FIT vs Hot Spot Temperature

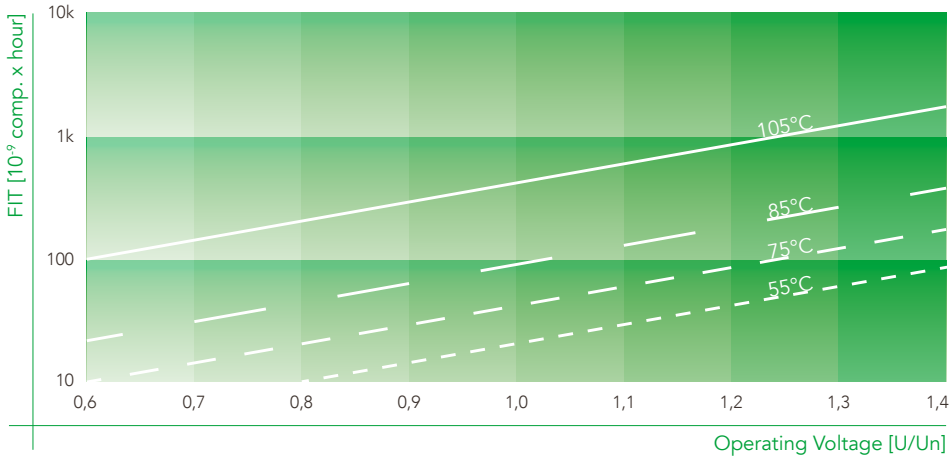

DCH 85C Un=900V

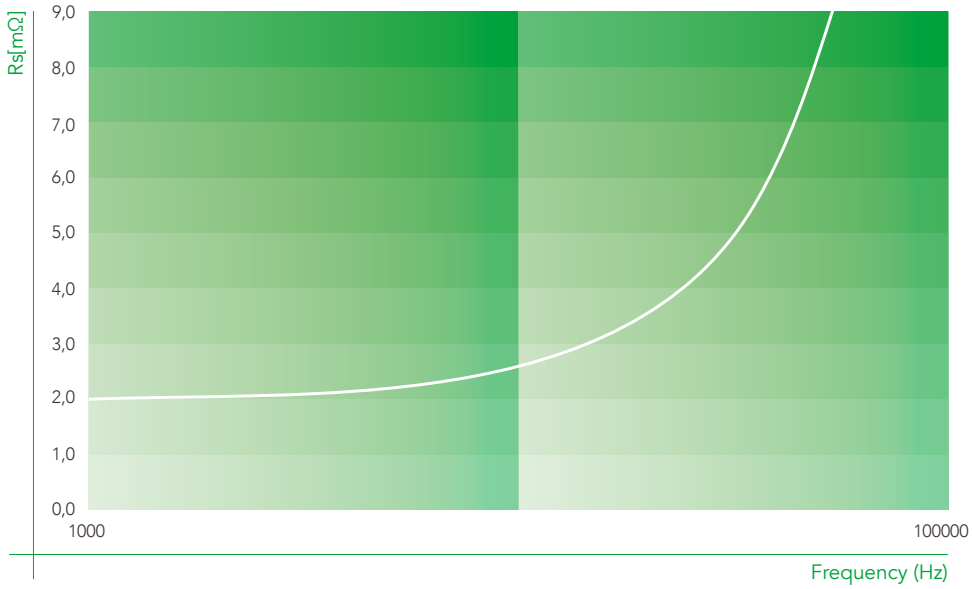

Typical DCH85C Series Resistance at ambient temperature for a specific model. For the characterization of a different model, please contact R&D department.

DC 85 C series

High Density, Low Inductance DC-Link Capacitors
Cylindrical Aluminium Case

Powered by the tried and proven Ducati Energia PPMh technology DC 85 C is a competitive and reliable solution to all common DC-Link applications. When coupled with the exclusive Ducati Energia High Crystallinity Film the DC 85 C construction provides superior temperature performance with 100khrs life @ 90°C HotSpot or extended life of 400khrs @70°C HotSpot.

The exclusive Ducati Energia metallization profiles guarantee high capacity stability and a controlled, open-circuit condition at the end of DC 85 C operational life, while maximizing the current capability.

Main characteristics:

- High Capacity Density
- Self-Healing Metallized Polypropylene Film
- UL-Approved Overpressure Safety Device
- Aluminium Case
- DRY Resin filling
- Low ESL

Main applications:

- DC-Link
- Energy Storage / Pulse Generation

DC 85 C Versions with Ducati Energia High Crystallinity Film:

- Standard Life expectancy 100.000hrs at 90°C HotSpot
- Extended Life expectancy 400.000hrs at 70°C HotSpot

General Characteristics

DC Voltage range	550÷1800 V
Maximum ripple voltage	1150 V
Maximum ripple current	100 A
Capacitance range	Up to 4450 µF
Capacitance tolerance	standard: +0%/-15%; others on request
Series resistance (RS)	< 4.5 mΩ
Maximum Voltage rate of rise (dV/dT)	≤ 40 V/µs
Terminals	M6 internal threads M8 screw types bolts
Voltage test	U_{tc}= 3.5 kVac @50 Hz 10 s U_{tt}= 1.5 x Un_{DC} 10 s
Working temperature ($\theta_{MIN} - \theta_{MAX}$)	–25 / +85 °C
Storage temperature	–25 / +85 °C
Filling	Dry polyurethane resin
Dielectric	Self healing PPMd film
Cylindrical case	Aluminum
Failure quota	50 /10E9
Life expectancy	100.000 h(*)
Maximum altitude	2000 m a.s.l.
Reference standard	IEC 1071-1/2 - IEC 1881 - UL 810
Internal thread terminals	Max 5 Nm
M8 screw terminals	Max 6 Nm
M12 fixing bolt	Max 12 Nm
UL - CSA approved (c UL us)	File n. E192559
In according to fire protection standard	EN 45545-2 (only for 85 and 100mm diameters)

Safety system: These capacitors are designed with a particular type of polypropylene metalized film (PPMd film) that assures an open circuit at the end of life, if the operation is within the specification.

(*) For details please refer to page 75.

For Mechanical drawings, check page 30.

Capacitance Cn [µF]	Diameter Ø [mm]	Height H [mm]	Max. RMS Current I_{MAX} [A]	Repet Peak Current Ip [A]	Surge Current Is [kA]	Series Resistance Rs [mΩ]	Thermal Resistance R_{THC} [°C/W]	Series Inductance Lesr [nH]	Weight [kg]	Pcs./box - Box type	Part n. 416.85
Un [V]= 550 V_{DC} Ur [V]= 230 V Up [V]= 850 V Us [V]= 1160 V											
500	75	105	25	1500	5.0	3.8	5.4	< 45	0.6	12 - A	L09.x
760	75	140	30	2200	6.5	3.6	4.8	< 50	0.8	6 - B	L19.x
870	75	155	35	2200	7.0	3.0	4.6	< 60	0.9	6 - B	L29.x
1000	85	140	35	3000	7.5	2.9	4.2	< 50	1.0	6 - B	L39.x
1150	85	155	40	3000	9.0	2.7	3.6	< 60	1.1	6 - B	L49.x
1850	100	185	65	3700	11.0	1.6	2.6	< 60	1.8	6 - C	L55.x
2550	116	185	70	4000	12.0	1.4	2.3	< 60	2.3	4 - G	L59.X
2800	100	255	70	4200	13.0	1.2	2.3	< 75	2.4	6 - D	L69.x
3900	116	255	75	5800	15.0	1.0	2.1	< 75	3.2	4 - G	L79.x
4000	116	285	80	6700	18.0	0.8	1.7	< 80	3.6	4 - G	L89.x
Un [V]= 700 V_{DC} Ur [V]= 320 V Up [V]= 1050 V Us [V]= 1470 V											
370	75	105	28	2200	6.6	3.9	5.4	< 45	0.6	12 - A	009.x
560	75	140	30	2800	8.4	3.7	4.8	< 50	0.8	6 - B	019.x
640	75	155	35	3200	9.6	3.2	4.6	< 60	0.9	6 - B	029.x
740	85	140	35	3300	10.0	3.1	4.2	< 50	1.0	6 - B	039.x
830	90	140	40	3500	10.0	3.0	4.0	< 50	1.1	6 - B	039.x
850	85	155	40	3800	11.5	2.9	3.6	< 60	1.1	6 - B	049.x
1350	100	185	65	5400	16.0	1.8	2.6	< 60	1.8	6 - C	055.x
1900	116	185	70	6600	20.0	1.7	2.3	< 60	2.3	4 - G	059.x
2350	100	255	70	7000	21.0	1.6	2.3	< 75	2.4	6 - D	069.x
2850	116	255	75	7100	21.0	1.3	2.1	< 75	3.2	4 - G	079.x
3300	116	285	85	8200	24.5	1.2	1.7	< 80	3.5	4 - G	089.x
Un [V]= 900 V_{DC} Ur [V]= 550 V Up [V]= 1350 V Us [V]= 1900 V											
280	75	105	30	2200	6.7	4.1	5.4	< 45	0.7	12 - A	119.x
430	75	140	35	2400	7.1	3.8	4.8	< 50	0.8	6 - B	139.x
570	85	140	35	3400	10.3	3.6	4.2	< 50	1.0	6 - B	149.x
620	90	140	40	3600	10.3	3.5	4.0	< 50	1.1	6 - B	159.x
650	85	155	40	3900	11.7	3.5	3.6	< 60	1.1	6 - B	169.x
1050	100	185	65	5300	15.8	2.2	2.6	< 70	1.8	6 - C	179.x
1450	116	185	70	7300	21.8	2.0	2.3	< 70	2.3	4 - G	185.x
1550	100	255	70	7800	23.3	1.9	2.3	< 75	2.4	6 - D	189.x
1800	100	285	75	8100	24.3	1.8	2.2	< 80	2.6	6 - E	191.x
2200	116	255	75	9900	29.7	1.4	2.1	< 75	3.1	4 - G	193.x
2350	100	373	100	10500	31.7	1.2	1.8	< 90	3.4	6 - F	195.x
2500	116	285	85	10000	30.0	1.5	1.7	< 80	3.5	4 - G	197.x
3300	116	373	100	11550	30.0	1.1	1.6	< 90	4.6	4 - H	199.x

Capacitance Cn [µF]	Diameter Ø [mm]	Height H [mm]	Max. RMS Current I_{MAX} [A]	Repet Peak Current Ip [A]	Surge Current Is [kA]	Series Resistance Rs [mΩ]	Thermal Resistance R_{THC} [°C/W]	Series Inductance Lesr [nH]	Weight [g]	Pcs./box - Box type	Part n. 416.85
Un [V]= 1100 V_{DC} Ur [V]= 700 V Up [V]= 1650 V Us [V]= 2300 V											
180	75	105	30	2160	6.5	4.2	5.4	< 45	0.6	12 - A	219.x
270	75	140	35	3240	9.7	3.9	4.8	< 50	0.8	6 - B	229.x
370	85	140	35	3960	11.9	3.7	4.2	< 50	1.0	6 - B	239.x
420	85	155	40	4200	12.6	3.6	3.6	< 60	1.1	6 - B	250.x
510	90	185	65	5200	16.0	3.1	2.8	< 70	1.6	6 - C	255.x
650	100	185	65	5850	17.6	2.3	2.6	< 70	1.8	6 - C	260.x
900	116	185	70	8100	24.3	2.1	2.3	< 70	2.3	4 - G	265.X
1000	100	255	70	8500	25.5	2.0	2.3	< 75	2.4	6 - D	270.x
1200	100	285	75	9200	27.6	1.9	2.2	< 80	2.6	6 - E	280.x
1400	116	255	75	11900	30.0	1.7	2.1	< 75	3.2	4 - G	285.x
1500	100	373	100	13500	32.0	1.3	1.8	< 90	3.4	6 - F	289.x
1600	116	285	85	12800	32.0	1.7	1.7	< 80	3.5	4 - G	293.x
2100	116	373	100	14400	32.0	1.3	1.7	< 90	4.4	4 - H	298.x
Un [V]= 1300 V_{DC} Ur [V]= 850 V Up [V]= 1950 V Us [V]= 2700 V											
120	75	105	30	2160	6.5	4.3	5.4	< 45	0.6	12 - A	319.x
180	75	140	35	3240	9.7	4.0	4.8	< 50	0.8	6 - B	320.x
250	85	140	35	4000	12.0	3.9	4.2	< 50	1.0	6 - B	330.x
270	90	140	40	4200	12.0	3.8	4.0	< 50	1.1	6 - B	335.x
300	85	155	40	4480	13.5	3.7	3.6	< 60	1.1	6 - B	340.x
470	100	185	65	7200	21.6	2.3	2.6	< 70	1.8	6 - C	350.x
550	90	255	70	8500	25.0	2.2	2.4	< 70	2.3	6 - D	353.x
650	116	185	70	9750	29.5	2.2	2.3	< 70	2.3	4 - G	355.x
700	100	255	70	9800	30.0	2.1	2.3	< 75	2.4	6 - D	360.x
800	100	285	75	11200	32.0	2.0	2.2	< 80	3.1	6 - E	370.x
980	116	255	75	12740	32.0	1.8	2.1	< 75	3.2	4 - G	375.x
1000	100	373	100	12600	32.0	1.3	1.8	< 90	3.5	6 - F	399.x
1150	116	285	85	13800	32.0	1.8	1.7	< 80	3.6	4 - G	385.x
1450	116	373	100	14500	32.0	1.4	1.6	< 90	4.6	4 - H	388.x

RMS working current vs Ambient temperature

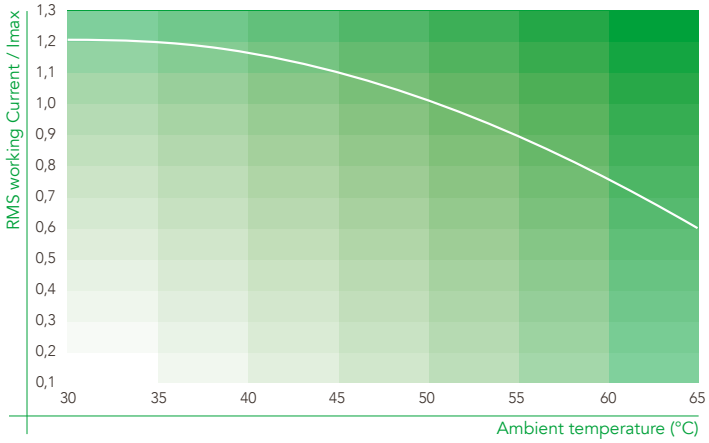

FIT vs Hot Spot Temperature

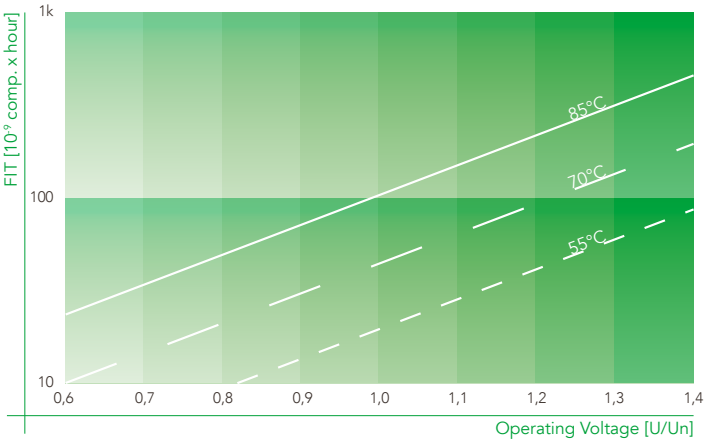

Capacitance Cn [µF]	Diameter Ø [mm]	Height H [mm]	Max. RMS Current I_{MAX} [A]	Repet Peak Current Ip [A]	Surge Current Is [kA]	Series Resistance Rs [mΩ]	Thermal Resistance R_{THC} [°C/W]	Series Inductance Lesr [nH]	Weight [Kg]	Pcs./box - Box type	Part n. 416.85
Un [V]= 1550 V_{DC} Ur [V]= 990 V Up [V]= 2300 V Us [V]= 3000 V											
90	75	105	30	2250	6.5	4.4	5.4	< 45	0.6	12 - A	419.x
140	75	140	35	2940	9.7	4.1	4.8	< 50	0.8	6 - B	420.x
180	85	140	35	3600	12.0	4.0	4.2	< 50	1.0	6 - B	430.x
200	85	155	40	4200	13.5	3.8	3.6	< 60	1.1	6 - B	440.x
250	90	155	45	5000	15.0	3.4	3.3	< 60	1.3	6 - B	445.x
350	100	185	65	7000	21.6	2.3	2.6	< 70	2.2	6 - C	450.x
400	90	255	70	7500	25.0	2.2	2.4	< 70	2.3	6 - D	457.x
470	116	185	70	8460	29.5	2.3	2.3	< 70	2.3	4 - G	455.x
500	100	255	70	9000	30.0	2.2	2.3	< 75	2.4	6 - D	460.x
600	100	285	75	9600	32.0	2.0	2.2	< 80	2.6	6 - E	470.x
700	116	255	75	11200	32.0	1.9	2.1	< 75	3.2	4 - G	475.x
750	100	373	100	12000	32.0	1.4	1.8	< 90	3.3	6 - F	480.x
820	116	285	85	13120	32.0	1.9	1.7	< 80	3.7	4 - G	485.x
1050	116	373	100	14700	32.0	1.4	1.6	< 90	4.6	4 - H	498.x
Un [V] = 1800 V_{DC} Ur [V] = 1150 V Up [V] = 2700 V Us [V] = 300 V											
60	75	105	30	2100	6.5	4.5	5.4	< 45	0.6	12 - A	510.x
100	75	140	35	3000	9.7	4.2	4.8	< 50	0.8	6 - B	520.x
135	85	140	35	3375	12.0	4.1	4.2	< 50	1.0	6 - B	530.x
150	85	155	40	3450	13.5	3.9	3.6	< 60	1.1	6 - B	540.x
190	90	155	45	3900	15.0	3.4	3.3	< 60	1.3	6 - B	545.x
240	100	185	65	4800	21.6	2.3	2.6	< 70	1.8	6 - C	550.x
310	90	255	70	6500	25.0	2.1	2.4	< 70	2.2	6 - D	553.x
340	116	185	70	6800	29.5	2.2	2.3	< 70	2.2	4 - G	555.x
370	100	255	70	7400	30.0	2.1	2.3	< 75	2.3	6 - D	560.x
430	100	285	75	9600	32.0	2.0	2.2	< 80	2.6	6 - E	570.x
530	116	255	75	10750	32.0	2.0	2.1	< 75	3.3	4 - G	575.x
560	100	373	100	11500	32.0	1.4	1.8	< 90	3.5	6 - F	580.x
610	116	285	85	12500	32.0	1.9	1.7	< 80	3.6	4 - G	585.x
800	116	373	100	14400	32.0	1.5	1.6	< 90	4.6	4 - H	598.x

NOTES:
(**Cn**) Tollerance standard value: -15 ... +0%. Other tollerance values on request.
(**Cn**) - (Un) Capacitance and rated voltage standard values, other values on request.
(**Ur**) Maximum peak to peak alternating voltage component on the DC working voltage.
(**Rs**) Releted at 1 KHz.
(**R_{THC}**) Thermal registance CASE TO AMBIENT in natural cooling environment.
(**I_{MAX}**) Maximum RMS current, refered to an ambient temperature of 50 °C (natural cooling) and working frequency of 1 KHz.
(**x code**) According to the terminal type: x=0--> A SOLUTION (internal thread M6) / x=1 B SOLUTION (M8 screw type bolts).

DC 89 HC series

High Current, Very Low Inductance DC-link / Snubber Capacitors
Cylindrical Plastic Case, optimised for heatsink mounting

The special design of DC 89 HC provides very high RMS current capability and very low series inductance in a compact package. The exclusive metal bottom reduces thermal resistance for optimal heat-sink mounting.
The exclusive Ducati Energia metallization profiles guarantee high capacity stability and a controlled, open-circuit condition at the end of DC 89 HC operational life, while maximizing the current capability.
A special internal construction allows the minimization of field effects, thus guaranteeing real-life low ESL.

Main characteristics:

- Very High Capacity Density
- Self-Healing Metallized Polypropylene Film
- UL-Approved Construction
- V0 Plastic Case
- DRY Resin filling
- REAL Very Low ESL

Main applications:

- High Switching Frequency DC-Link

General Characteristics

DC Voltage range	500÷1450 V(*)
Maximum ripple current	100 A
Maximum working frequency	10 kHz
Capacitance range	Up to 220 µF (*)
Capacitance tolerance	standard: ±10% / on request: ±5%
Terminals	M8 screw-type bolts ur female M5
Test voltage	U_{tc}= 3.0 kVac @50 Hz 60 s U_{tt}= 1.5 x Un_{DC} 10 s
Working temperature ($\theta_{MIN} - \theta_{MAX}$)	–25 / +85 °C
Storage temperature	–25 / +85 °C
Filling	Polyurethane resin
Dielectric	Self healing PPM film
Container	Self-extinguishing (UL94 V0) plastic box
Failure quota	50 /10E9
Life expectancy	100.000 h (**)
Maximum altitude	2000 m a.s.l.
Reference standard	IEC 1071-1/2 - IEC 1881 - UL 810
Driving tourque for M8 screw-type	5 Nm
Driving tourque for fixing holes (MAX)	2.5 Nm
Number pieces for box	16
M8 screw terminals	Max 5 Nm
Fixing slots	Max 2.5 Nm
UL - CSA approved (c UL us)	File n. E192559
In according to fire protection standard	EN 45545-2

(*) Other values on request
(**) For details please refer to page 75.

Capacitance Cn [µF]	Height H [mm]	Repet. Peak Voltage Up [kV]	Max. RMS Current I_{MAX} [A]	Repet. Peak Current Ip [A]	Surge Current Is [kA]	Series Resistance R_{ESR} [mΩ]	Thermal Resistance R_{THC} [°C/W]	Series Inductance L_{ESR} [nH]	Weight [kg]	Part number 416.89.
Un_{DC}= 500 V Us= 1.0 kV										
70	40	0.75	100	9000	13.0	0.55	4.8	< 25	< 0.45	051x
100	40	0.75	100	8500	12.7	0.60	4.8	< 25	< 0.45	052x
130	51	0.75	85	8000	11.5	0.70	5.7	< 30	< 0.55	053x
160	51	0.75	85	7000	10.5	0.75	5.7	< 30	< 0.55	055x
190	64	0.75	70	6500	10.0	0.78	7.8	< 40	< 0.70	057x
220	64	0.75	70	6200	9.3	0.80	7.8	< 40	< 0.65	059x
Un_{DC}= 700 V Us= 1.4 kV										
60	40	1.05	90	8000	12.0	0.70	4.8	< 25	< 0.45	071x
80	40	1.05	90	7500	11.3	0.75	4.8	< 25	< 0.45	072x
100	51	1.05	80	7400	11.0	0.80	5.7	< 30	< 0.55	072x
130	51	1.05	80	7200	10.8	0.85	5.7	< 30	< 0.55	075x
150	64	1.05	65	6400	10.5	0.87	7.8	< 40	< 0.70	075x
180	64	1.05	65	6600	9.9	0.90	7.8	< 40	< 0.65	079x
Un_{DC}= 900 V Us= 1.8 kV										
45	40	1.35	85	5300	8.0	0.80	4.8	< 25	< 0.45	091x
70	40	1.35	85	5250	7.8	0.85	4.8	< 25	< 0.45	092x
100	51	1.35	75	4700	7.5	0.95	5.7	< 30	< 0.55	095x
110	51	1.35	75	4650	7.3	0.98	5.7	< 30	< 0.55	096x
125	64	1.35	60	4600	7.0	1.00	7.8	< 40	< 0.70	097x
150	64	1.35	60	4500	6.8	1.10	7.8	< 40	< 0.65	099x
Un_{DC}= 1100 V Us= 2.2 kV										
30	40	1.65	80	4800	7.8	0.90	4.8	< 25	< 0.45	111x
45	40	1.65	80	4750	7.2	0.95	4.8	< 25	< 0.45	112x
70	51	1.65	65	4600	7.0	1.00	5.7	< 30	< 0.55	114x
75	51	1.65	65	4550	6.8	1.10	5.7	< 30	< 0.55	115x
100	64	1.65	55	4500	6.7	1.20	7.8	< 40	< 0.70	118x
110	64	1.65	55	4400	6.6	1.25	7.8	< 40	< 0.65	119x
Un_{DC}= 1250 V Us= 2.5 kV										
20	40	1.90	75	4500	6.8	1.15	4.8	< 25	< 0.45	121x
35	40	1.90	75	4200	6.6	1.20	4.8	< 25	< 0.45	122x
45	51	1.90	65	4200	6.4	1.25	5.7	< 30	< 0.55	123x
55	51	1.90	65	4200	6.2	1.30	5.7	< 30	< 0.55	125x
70	64	1.90	55	4000	6.0	1.35	7.8	< 40	< 0.70	127x
80	64	1.90	55	4000	6.0	1.40	7.8	< 40	< 0.65	129x

DC 89 HC series

High Current, Very Low Inductance DC-link / Snubber Capacitors
Cylindrical Plastic Case, optimised for heatsink mounting

Capacitance Cn [µF]	Height H [mm]	Repet. Peak Voltage Up [kV]	Max. RMS Current I_{MAX} [A]	Repet. Peak Current Ip [A]	Surge Current Is [kA]	Series Resistance R_{ESR} [mΩ]	Thermal Resistance R_{THC} [°C/W]	Series Inductance L_{ESR} [nH]	Weight [kg]	Part number 416.89.
Un_{DC}= 1450 V Us= 2.9 kV										
15	40	2.20	70	3500	5.2	1.25	4.8	< 25	< 0.45	141x
25	40	2.20	70	3380	5.1	1.30	4.8	< 25	< 0.45	142x
30	51	2.20	60	3200	4.8	1.45	5.7	< 30	< 0.55	143x
40	51	2.20	60	3200	4.8	1.45	5.7	< 30	< 0.55	145x
50	64	2.20	50	3100	4.6	1.50	7.8	< 40	< 0.70	147x
55	64	2.20	50	3050	4.5	1.55	7.8	< 40	< 0.65	149x

NOTES:
(**Cn**) Tollerance standard value: ±10%. Other tollerance values on request.
(**Cn**) - (**Un**) Capacitance and rated voltage standard values, other values on request.
(**Rs**) Releted at 1 KHz.
(**R_{THC}**) Thermal registance CASE TO AMBIENT in natural cooling environment. In order to decrease the thermal resistance, install the capacitors on a heatsink (with conductive past) through the optimised bottom alyminum.
(**I_{MAX}**) Maximum RMS current, refered to an ambient temperature of 50 °C (natural cooling) and working frequency of 1 KHz.
(**x code**) According to mechanical solution: from Ø to 4 fot M8 screw type bolt, from 5 to 8, for female M5 internal threads.

Box TYPE	
Standard box dimensions:	mm 195 x 390 x 250
No. pieces per box:	16

Insulation spacing	
Surface (mm)	Air (mm)
37	27

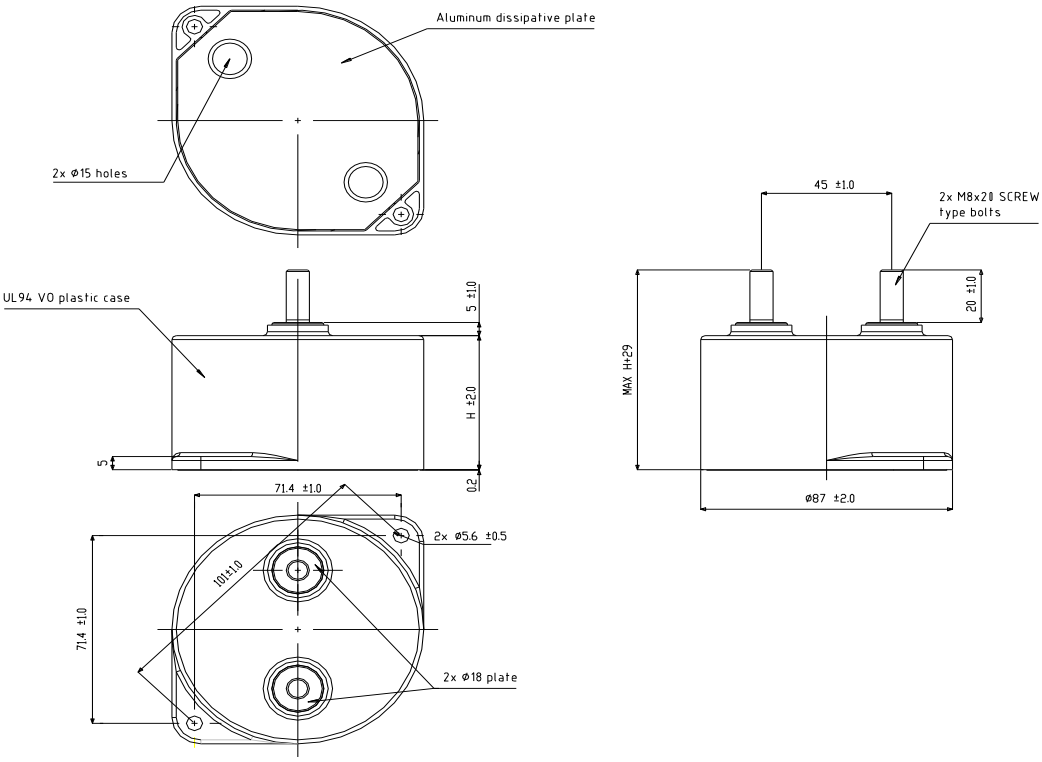

A SOLUTION

41689.YYY.X
Male M8 screw type bolts
(x) Code: from 0 to 4 for A solution

SOLUTION

H = 40 ± 2 mm
H = 51 ± 2 mm
H = 64 ± 2 mm

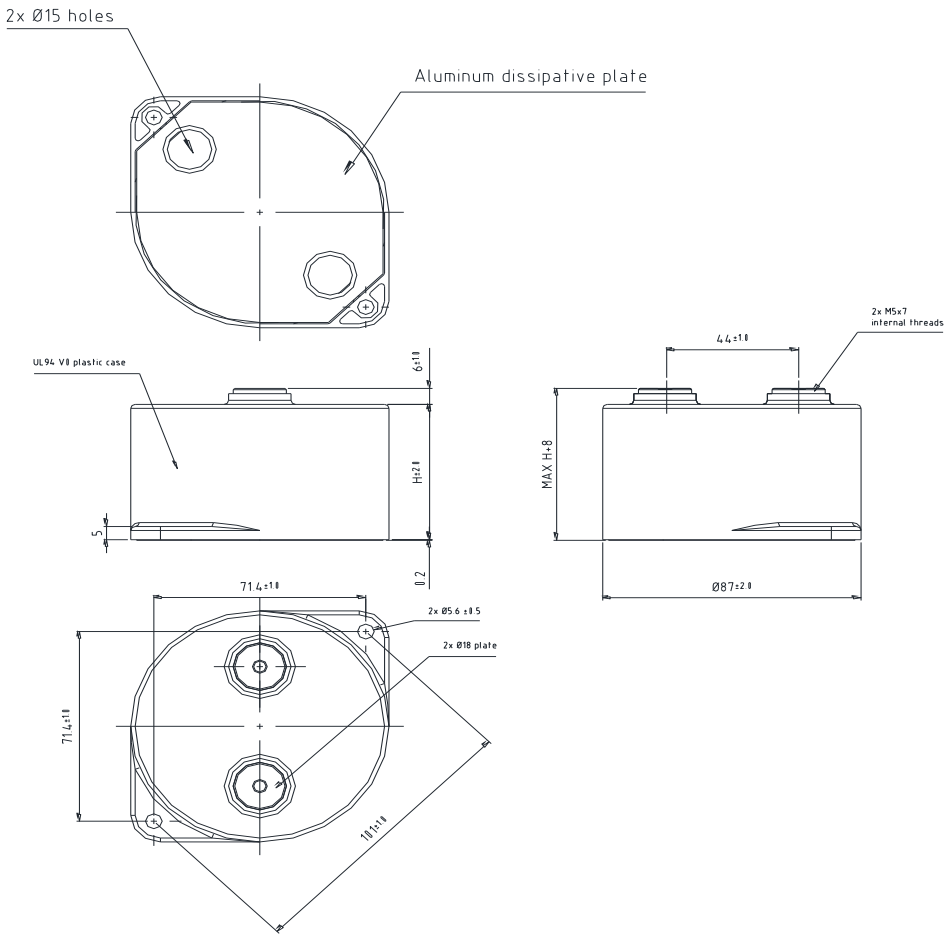

B SOLUTION

41689.YYY.X
Female M5 internal threads
(x) Code: : from 5 to 8 for B solution

SOLUTION

H = 40 ± 2 mm
H = 51 ± 2 mm
H = 64 ± 2 mm

RMS working current vs Ambient temperature

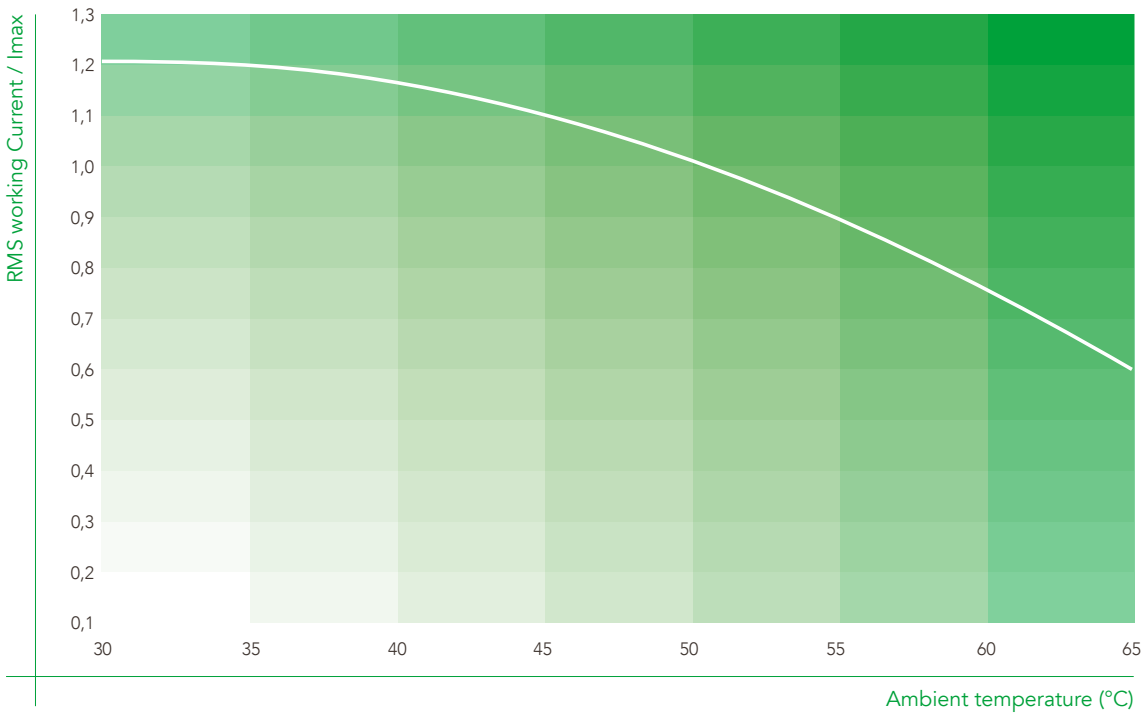

FIT vs Hot Spot Temperature

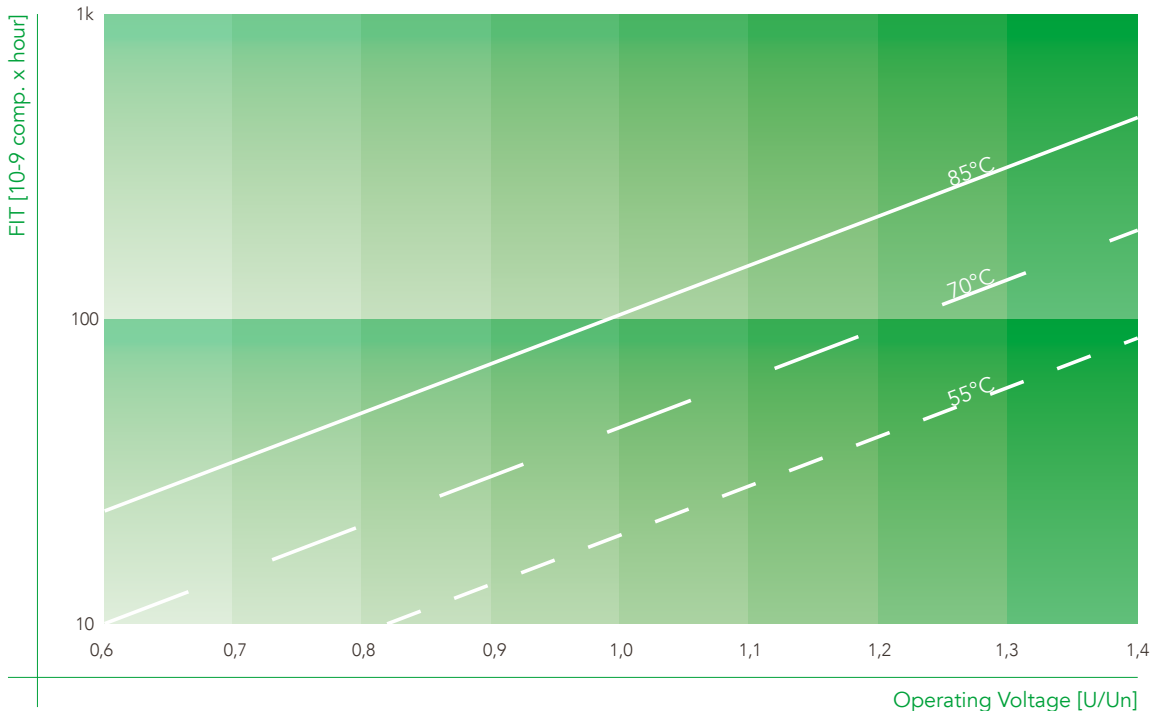

Typical Series Resistance | Un = 700V

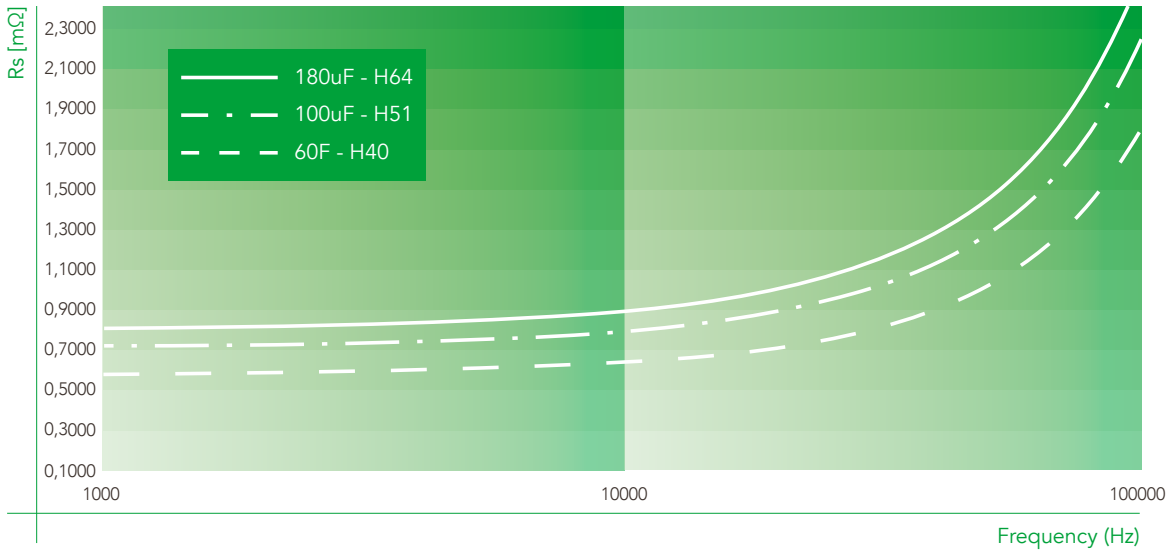

Typical Series Resistance | Un = 1100V

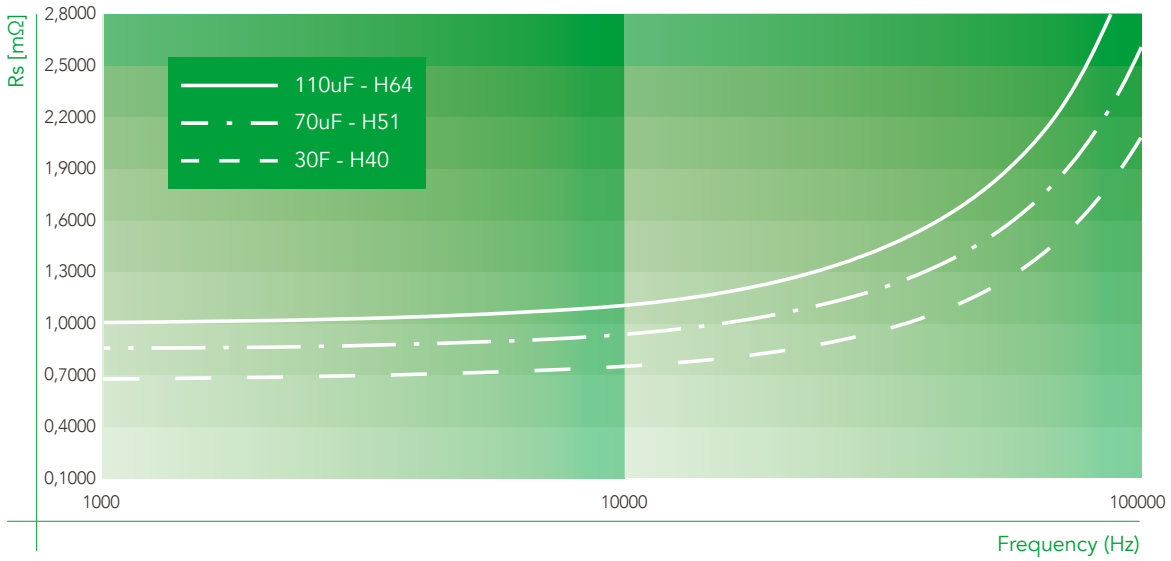

Typical Series Resistance | Un = 1450V

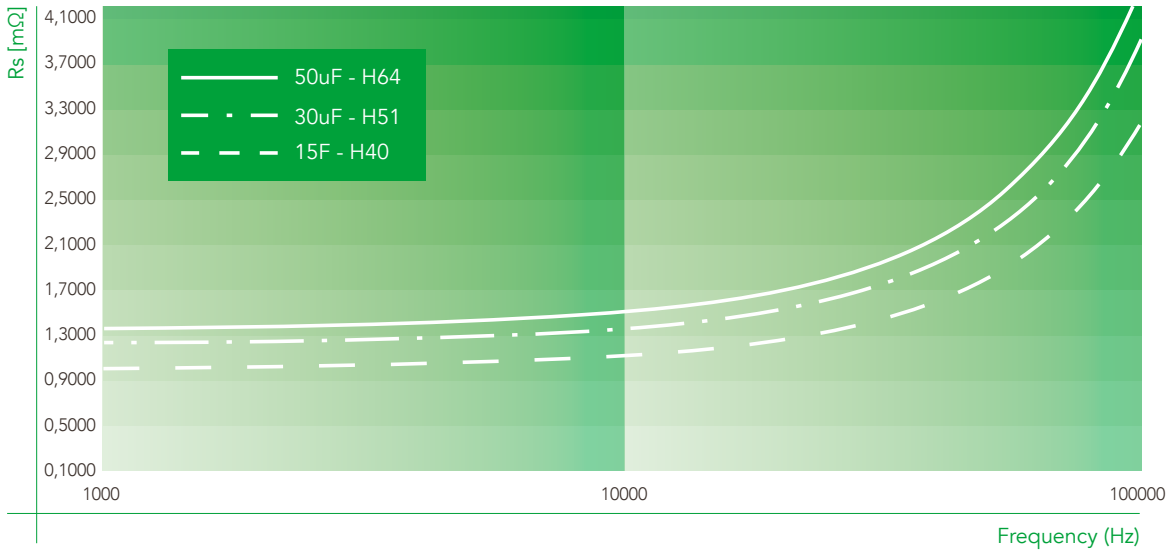

DCH 86 PS series

Very High Density, Very Low Inductance DC-Link Capacitors - Prismatic Plastic Case

Thanks to the exclusive Ducati Energia High Crystallinity Film DCH 86 PS Prismatic DC-link Capacitors provide leading Capacity Density without any de-rating or limitation, respective to standard makes.
The very high capacity density allows substantial cost reductions due to the reduction of capacitor size and/or number, as well as particularly low inductance values.
The exclusive Ducati Energia metallization profiles guarantee high capacity stability and a controlled, open-circuit condition at the end of DCH 86 PS operational life, while maximizing the current capability.
A special internal construction allows the minimization of field effects, thus guaranteeing real-life low ESL.

Main characteristics:

- Very High Capacity Density
- Self-Healing Metallized Polypropylene Film
- UL-Approved Construction
- Aluminum Case
- DRY Resin filling
- REAL Low ESL

Main applications:

- DC-Link
- Energy Storage / Pulse Generation

General Characteristics

DC Voltage range	700÷2500 V
Maximum ripple current	165 A
Capacitance range	Up to 2100 µF
Capacitance tolerance	±10%
Thermal resistance natural cooling (RTHc)	2.60 °C/W
Equivalent series inductance (LESR)	< 30 nH
Terminals	M8 x 15 internal threads
Test voltage	U_{tc}= 4.5 kVac @50 Hz 60 s U_{tt}= 1.5 x Un_{DC} 10 s
Climatic Ambient Temperature	–25 / +45 °C
Working temperature ($\theta_{MIN} - \theta_{MAX}$)	–25 / +85 °C
Storage temperature	–25 / +85 °C
Filling	Self-extinguishing (UL94 V0) polyurethane resin
Container	Self-extinguishing (UL94 V0) plastic box
Failure quota	50/10E9
Life expectancy	100.000 h
Maximum altitude	100.000 h
Maximum altitude	2000 m a.s.l.
Reference standard	IEC 1071-1/2 - IEC 1881 - UL 810
M8 internal thread terminals	Max 4 Nm
M8 screw terminals	Max 6 Nm
Fixing slots	Max 10 Nm
UL - CSA approved (c UL us)	File n. E192559
In according to fire protection standard	EN 45545-2

Safety system: These capacitors are designed with a particular type of polypropylene metalized film (PPMd film) that assures an open circuit at the end of life, if the operation is within the specification.

Capacitance Cn [µF]	Rated DC Voltage Un [V]	Repet. Peak Voltage Up [KV]	Surge Voltage Us [KV]	Max. RMS Current I_{MAX} [A]	Repet. Peak Current Ip [A]	Surge Current Is [kA]	Series Resistance Rs [m Ω]	Thermal Resistance R_{THS} [°C/W]	Weight [kg]	Part number 416.86.V.xxxx
2.100	700	1.1	1.2	165	15.000	28.0	< 0.48	2.60	< 4.5	1095
1.500	850	1.0	1.5	155	13.800	26.0	< 0.50	2.60	< 4.5	1595
1.150	1100	1.7	2.3	150	12.000	25.0	< 0.55	2.60	< 4.5	2095
750	1250	1.9	2.625	140	11.400	23.0	< 0.59	2.60	< 4.5	2595
600	1400	2.1	2.9	130	11.000	21.5	< 0.66	2.60	< 4.5	3095
1100	1600	2.4	3.36	120	10.640	20.5	< 0.73	2.60	< 4.5	3595
380	1800	2.7	3.8	120	10.500	19.0	< 0.85	2.60	< 4.5	4095
300	2100	3.2	4.5	110	9.660	18.5	< 0.89	2.60	< 4.5	4595
230	2500	3.8	4.5	100	8.200	14.5	< 0.98	2.60	< 4.5	5095

NOTES:
(**Cn**) Tollerance standard value: ±10%. Other tollerance values on request.
(**Cn**) - (**Un**) Capacitance and rated voltage standard values, other values on request.
(**Ur**) Maximum peak to peak alternating voltage component on the DC working voltage.
(**Rs**) Releted at 1 KHz.
(**R_{THS}**) Thermal resistance AMBIENT - HOT SPOT (air forced cooling system).
(**Imax**) Maximum RMS @ 50 °C ambient temperature.

Insulation spacing	
Surface (mm)	Air (mm)
37	27

Box TYPE	
Standard box dimensions:	mm 195 x 390 x 250
No. pieces per box:	16

Typical Series Resistance at 23 °C

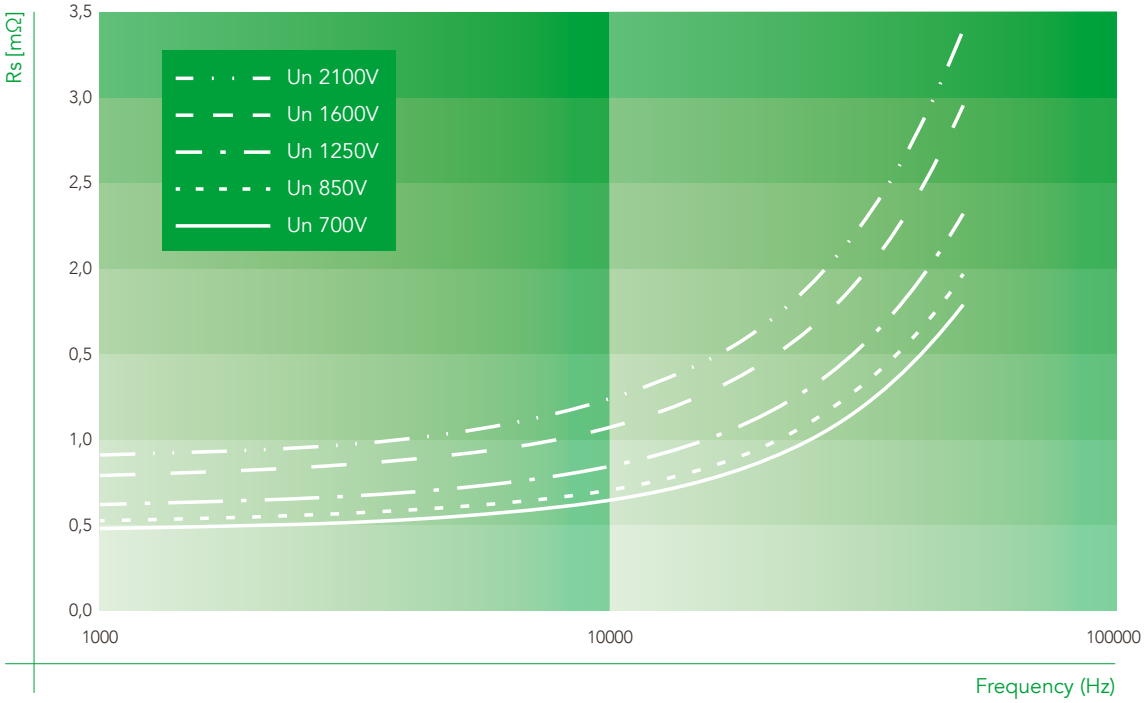

M8 standard terminals solution:

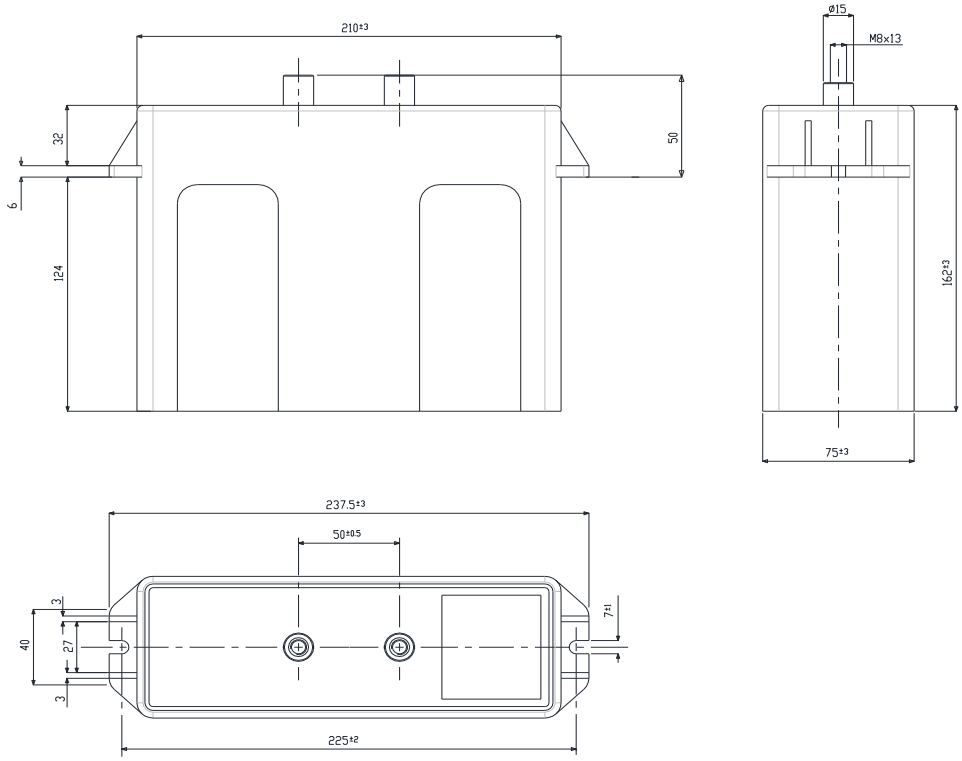

Available on request: M8 staggered terminals solution:

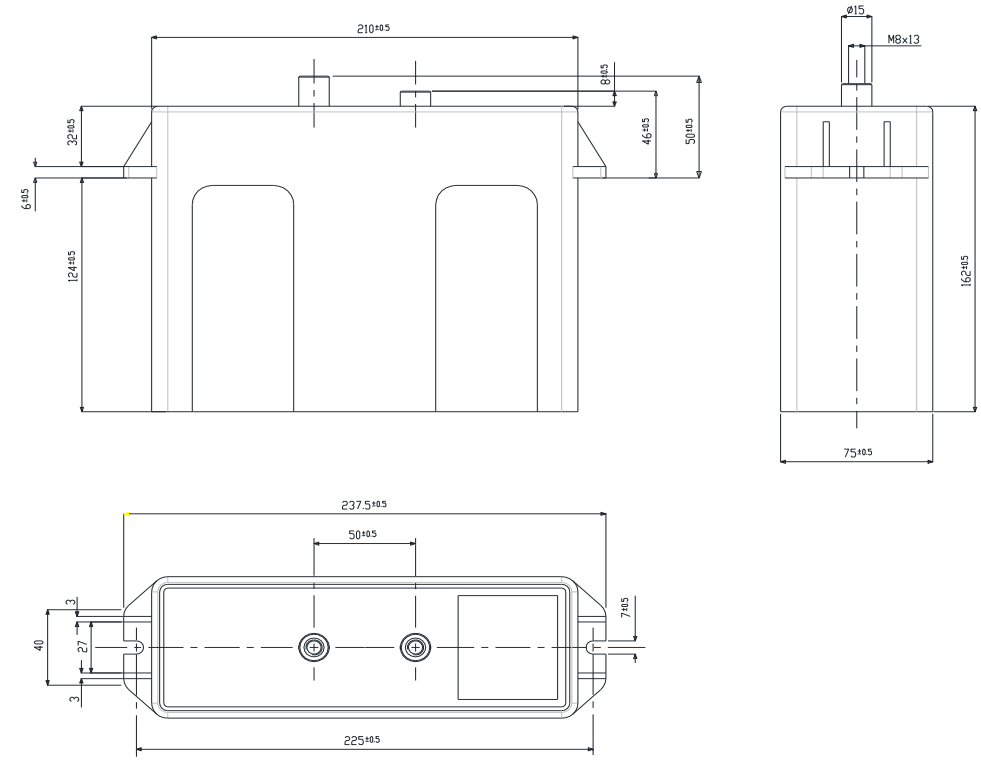

DC 86 PS series

High Density, Very Low Inductance DC-Link Capacitors
Prismatic Plastic Case

This Prismatic Box variant is powered by the tried and proven Ducati Energia PPMh technology making it a competitive and reliable solution to all common DC-Link applications.
When coupled with the exclusive Ducati Energia High Crystallinity Film the DC 85 B construction provides superior temperature performance with 100khrs life @ 90°C HotSpot or extended life of 400khrs @70°C HotSpot.
The exclusive Ducati Energia metallization profiles guarantee high capacity stability and a controlled, open-circuit condition at the end of DC 86 PS operational life, while maximizing the current capability.
A special internal construction allows the minimization of field effects, thus guaranteeing real-life low ESL

Main characteristics:

- High Capacity Density
- Self-Healing Metallized Polypropylene Film
- UL-Approved Construction
- V0 Plastic Case
- DRY Resin filling
- REAL Low ESL

Main applications:

- DC-Link
- Energy Storage / Pulse Generation

DC 86 PS Versions with Ducati Energia High Crystallinity Film:

- Standard Life expectancy 100.000hrs at 90°C HotSpot
- Extended Life expectancy 400.000hrs at 70°C HotSpot

General Characteristics

DC Voltage range	550÷2700 V
Maximum ripple current	165 A
Capacitance range	Up to 2100 µF
Capacitance tolerance	±10%
Thermal resistance natural cooling (R_{THc})	2.60 °C/W
Equivalent series inductance (ESL)	< 30 nH
Terminals	M8 x 15 internal threads
Test voltage	U_{tc}= 4.5 kVac @50 Hz 60 s U_{tt}= 1.5 x Un_{DC} 10 s
Working temperature ($\theta_{MIN} - \theta_{MAX}$)	–25 / +85 °C
Storage temperature	–25 / +85 °C
Filling	Self-extinguishing (UL94 V0) polyurethane resin
Dielectric	Self healing PPMd film
Container	Self-extinguishing (UL94 V0) plastic box
Failure quota	50 /10E9
Life expectancy	100.000 h (*)
Maximum altitude	2000 m a.s.l.
Reference standard	IEC 1071-1/2 - IEC 1881 - UL 810
M6 internal thread terminals	Max 4 Nm
Fixing slots	Max 10 Nm
UL - CSA approved (c UL us)	File n. E192559
In according to fire protection standard	EN 45545-2

Safety system: These capacitors are designed with a particular type of polypropylene metalized film (PPMd film) that assures an open circuit at the end of life, if the operation is within the specification.

(*) For details please refer to page 75.

Capacitance Cn [µF]	Rated DC Voltage Un [V]	Repet. Peak Voltage Up [kV]	Surge Voltage Us [kV]	Max. RMS Current I_{MAX} [A]	Repet. Peak Current Ip [A]	Surge Current Is [kA]	Series Resistance Rs [mΩ]	Thermal Resistance R_{THC} [°C/W]	Weight [kg]	Part number 416.86.xxxx
2100	550	0.8	1.2	165	16800	29.5	< 0.48	2.60	< 4.5	0095
1500	700	1.0	1.5	165	15000	28.0	< 0.50	2.60	< 4.5	1095
1150	850	1.3	1.8	155	13800	26.0	< 0.55	2.60	< 4.5	1595
750	1100	1.7	2.3	150	12000	25.0	< 0.59	2.60	< 4.5	2095
600	1250	1.9	2.6	140	11400	23.0	< 0.66	2.60	< 4.5	2595
500	1400	2.1	2.9	130	11000	21.5	< 0.73	2.60	< 4.5	3095
380	1600	2.4	3.4	120	10640	20.5	< 0.85	2.60	< 4.5	3595
300	1800	2.7	3.8	120	10500	19.0	< 0.89	2.60	< 4.5	4095
230	2100	3.2	4.4	110	9660	18.5	< 0.98	2.60	< 4.5	4595
120	2700	4.1	5.7	100	7800	14.5	< 1.15	2.60	< 4.5	5095

NOTES:
(**Cn**) Tollerance standard value: ±10%. Other tollerance values on request.
(**Cn**) - (**Un**) Capacitance and rated voltage standard values, other values on request.
(**Rs**) Releted at 1 KHz.
(**R_{THS}**) Thermal resistance AMBIENT - HOT SPOT (air forced cooling system).
(**I_{MAX}**) Maximum RMS @ 50 °C ambient temperature.

Insulation spacing	
Surface (mm)	Air (mm)
37	27

Box TYPE	
Standard box dimensions:	mm 195 x 390 x 250
No. pieces per box:	16

Typical Series Resistance at 23 °C

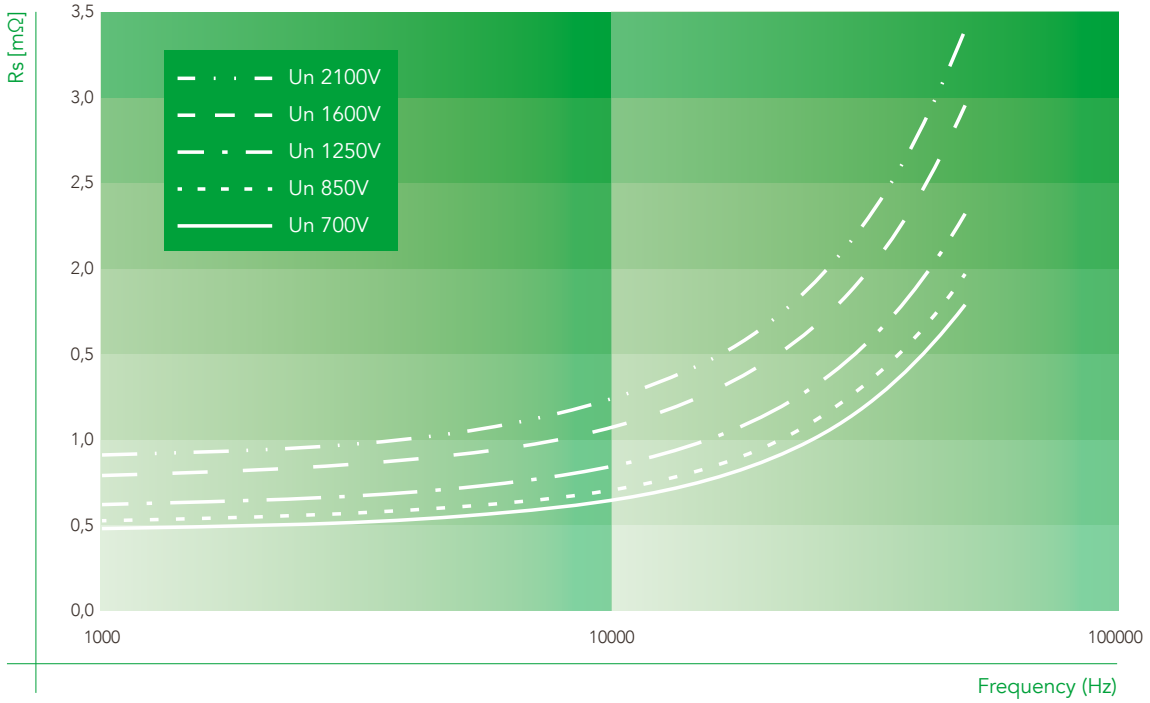

M8 standard terminals solution:

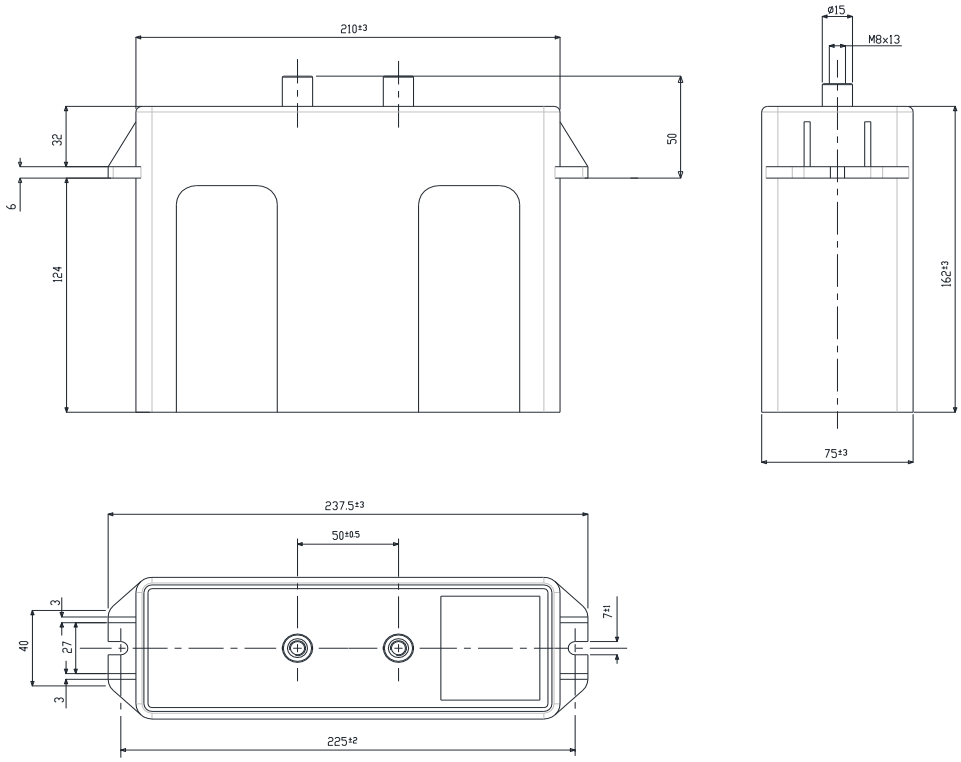

Available on request: M8 staggered terminals solution:

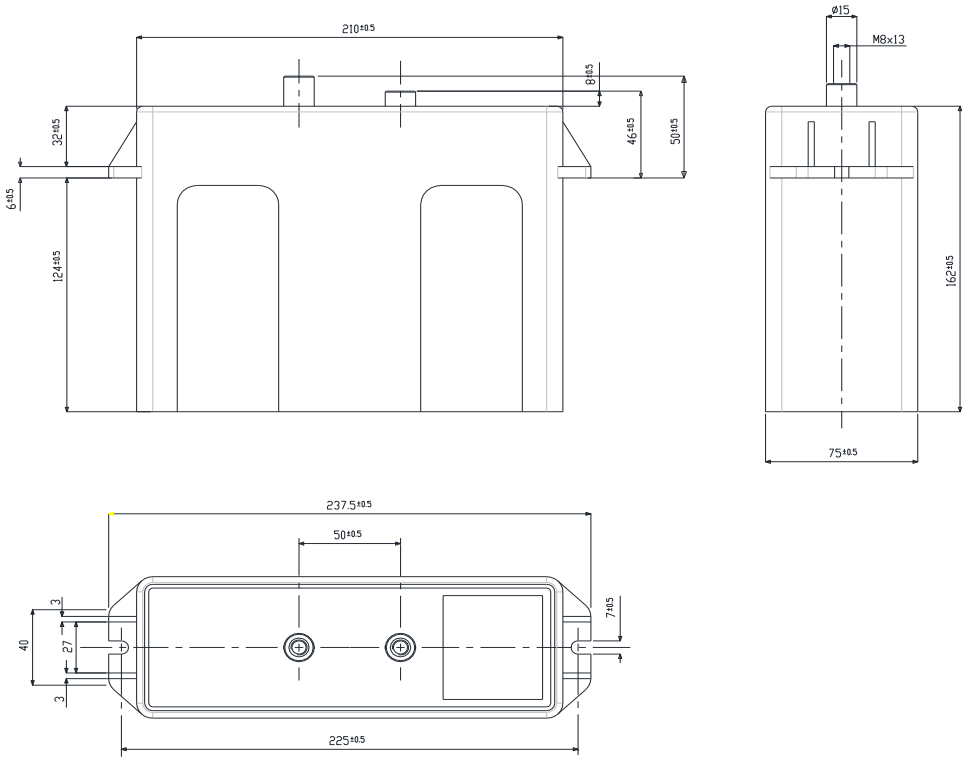

DC 86 P series

High Density, Low Inductance DC-Link Capacitors
Prismatic Plastic Case

This very large Prismatic Box variant is particularly convenient for applications requiring very large capacity or high operating voltages; the tried and proven Ducati Energia PPMh technology provides competitive and reliable performances for all common DC-Link applications.
When coupled with the exclusive Ducati Energia High Crystallinity Film the DC 86 P construction provides superior temperature performance with 100khrs life @ 90°C HotSpot or extended life of 400khrs @70°C HotSpot.

The exclusive Ducati Energia metallization profiles guarantee high capacity stability and a controlled, open-circuit condition at the end of DC 86 P operational life, while maximizing the current capability.

Main characteristics:

- Very High Capacity Density
- Self-Healing Metallized Polypropylene Film
- V0 Plastic Case
- DRY Resin filling
- Low ESL

Main applications:

- DC-Link
- Energy Storage / Pulse Generation

DC 86 B Versions with Ducati Energia High Crystallinity Film:

- Standard Life expectancy 100.000hrs at 90°C HotSpot
- Extended Life expectancy 400.000hrs at 70°C HotSpot

General Characteristics

DC Voltage range	550÷6800 V
Maximum ripple current	300 A
Capacitance range	Up to 15000 µF
Capacitance tolerance	standard: +0%/-15%; others on request
Thermal resistance natural cooling (R_{THc})	0.52 °C/W
Equivalent series inductance (ESL)	< 45 nH
Terminals	4 x M6 internal threads per pole or bus-bars
Test voltage	U_{tc}= 12 kVac @50 Hz 60 s U_{tt}= 1.5 x UnDC 10 s
Working temperature ($\theta_{MIN} - \theta_{MAX}$)	–25 / +85 °C
Storage temperature	–25 / +85 °C
Filling	Self-extinguishing (UL94 V0) polyurethane resin
Dielectric	Self healing PPMd film
Container	Self-extinguishing (UL94 V0) plastic box
Failure quota	50 /10E9
Life expectancy	100.000 h (*)
Maximum altitude	2000 m a.s.l.
Reference standard	IEC 1071-1/2 - IEC 1881 - UL 810
M6 internal thread terminals	Max 3 Nm
Fixing slots	Max 10 Nm
In according to fire protection standard	EN 45545-2

Safety system: These capacitors are designed with a particular type of polypropylene metalized film (PPMd film) that assures an open circuit at the end of life, if the operation is within the specification.

(*) For details please refer to page 75.

Capacitance Cn [µF]	Rated DC Voltage Un [V]	Repet. Peak Voltage Up [kV]	Surge Voltage Us [kV]	Max. RMS Current I_{MAX} [A]	Repet. Peak Current Ip [A]	Surge Current Is [kA]	Series Resistance Rs [mΩ]	Thermal Resistance R_{THC} [°C/W]	Weight [kg]	Terminal solution A / B	Part n. 416.86.
15000	550	0.8	1.3	300	34500	45	< 0.30	0.52	< 19.0	A / B	009.x
11000	650	1.0	1.5	300	30800	45	< 0.30	0.52	< 19.0	A / B	109.x
8500	800	1.2	1.8	300	28050	45	< 0.30	0.52	< 19.0	A / B	159.x
5600	1000	1.5	2.3	250	26880	40	< 0.45	0.52	< 19.0	A / B	209.x
3800	1200	1.8	2.8	250	22800	40	< 0.50	0.52	< 19.0	A / B	259.x
2800	1350	2.0	3.1	250	22400	40	< 0.50	0.52	< 19.0	A / B	309.x
2100	1600	2.4	3.7	200	21000	40	< 0.65	0.52	< 19.0	A / B	359.x
1700	1800	2.7	4.1	200	20400	40	< 0.70	0.52	< 19.0	A / B	409.x
1050	2100	3.1	4.8	200	19950	40	< 0.70	0.52	< 19.0	A / B	459.x
650	2700	4.0	6.2	200	19500	35	< 0.75	0.52	< 19.0	A / B	508.x
500	3200	4.8	7.4	200	17500	35	< 0.75	0.52	< 19.0	A / B	559.x
300	3800	5.7	8.7	200	13500	35	< 0.75	0.52	< 19.0	A / B	609.x
200	4500	6.7	10.0	150	13000	30	< 1.20	0.52	< 19.0	A	659.0
160	5200	7.8	10.0	150	11200	30	< 1.20	0.52	< 19.0	A	709.0
120	6000	9.0	10.0	150	10800	25	< 1.40	0.52	< 19.0	A	759.0
80	6800	10.0	10.0	120	9600	20	< 1.50	0.52	< 19.0	A	809.0

NOTES:
(**Cn**) Tollerance standard value: -15 ... +0%. Other tollerance values on request.
(**Cn**) - (**Un**) Capacitance and rated voltage standard values, other values on request.
(**Ur**) Maximum peak to peak alternating voltage component on the DC working voltage.
(**Rs**) Releted at 1 KHz.
(**R_{THC}**) Thermal registance CASE TO AMBIENT in natural cooling environment.
(**A/B solut**) Due to the clearance distance, B SOLUTION (X code= 1) is available only up to Un= 3800 V (Rated Voltage).
(**X code)** According to terminal type. A SOLUTION X=0 / B SOLUTION X=1.

Box TYPE	
Standard box dimensions	mm 477 x 252 x 172
No. pieces x box:	1

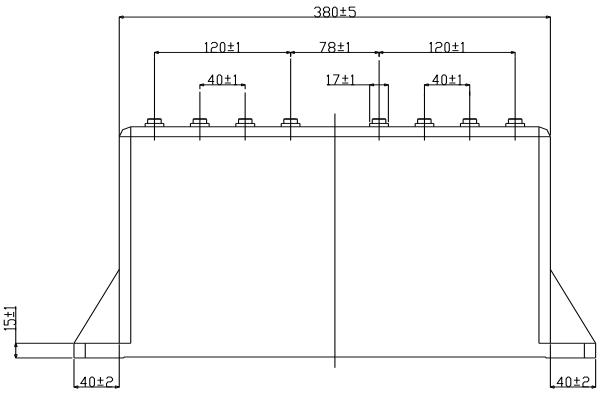

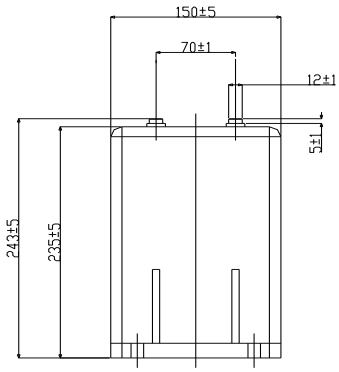

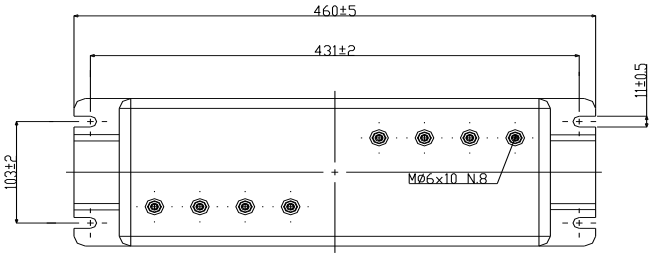

A SOLUTION

41686.XXX.0
M6 internal threads

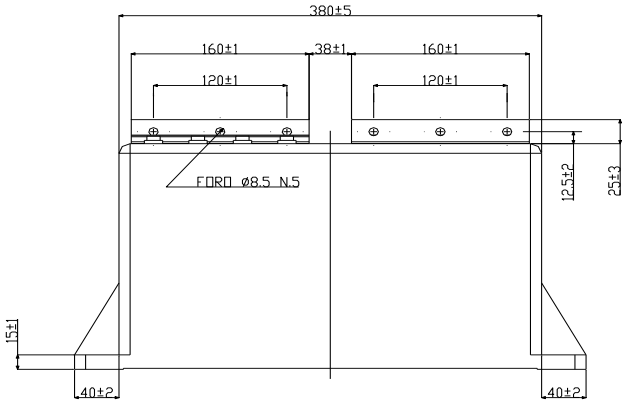

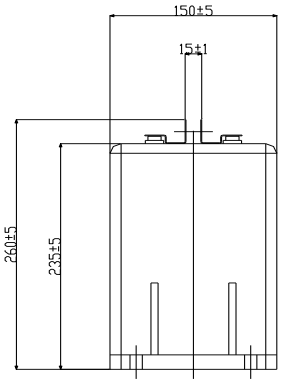

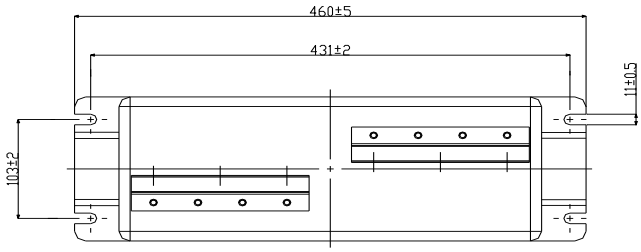

B SOLUTION

41686.XXX.1
Bus bar terminals

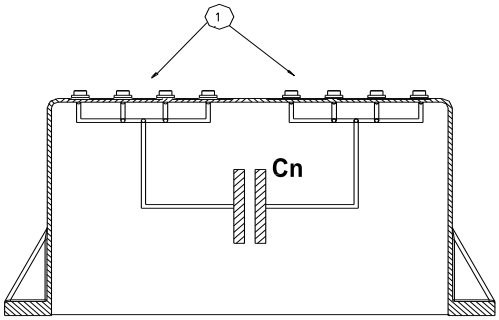

NOTES:
For A Solution: please, pay attention to connect all of the four M6 internal thread terminals for each polarity.

DC 85 B series

High Density, Low Inductance DC-Link Capacitors
Cubic Plastic Case

his Cubic Box variant is powered by the tried and proven Ducati Energia PPMh technology making it a competitive and reliable solution to all common DC-Link applications.
When coupled with the exclusive Ducati Energia High Crystallinity Film the DC 85 B construction provides superior temperature performance with 100khrs life @ 90°C HotSpot or extended life of 400khrs @70°C HotSpot.
The exclusive Ducati Energia metallization profiles guarantee high capacity stability and a controlled, open-circuit condition at the end of DC 85 B operational life, while maximizing the current capability.

Main characteristics:

- High Capacity Density
- Self-Healing Metallized Polypropylene Film
- V0 Plastic Case
- DRY Resin filling
- Low ESL

Main applications:

- DC-Link
- Energy Storage / Pulse Generation

DC 85 B Versions with Ducati Energia High Crystallinity Film:

- Standard Life expectancy 100.000hrs at 90°C HotSpot
- Extended Life expectancy 400.000hrs at 70°C HotSpot

General Characteristics

DC Voltage range	550÷6000 V
Maximum ripple current	120 A
Capacitance range	Up to 38000 µF
Capacitance tolerance	standard: +0%/-15%; others on request
Series resistance (RS)	< 5 mΩ
Thermal resistance natural cooling (R_{THc})	2.0 °C/W
Equivalent series inductance (ESL)	< 30 nH
Terminals	M10 screw-type bolts
Test voltage	U_{tt}= 1.5 x Un_{DC} 10 s
Working temperature ($\theta_{MIN} - \theta_{MAX}$)	–25 / +85 °C
Storage temperature	–25 / +85 °C
Filling	Self-extinguishing (UL94 V0) polyurethane resin
Dielectric	Self healing PPMd film
Container	Self-extinguishing (UL94 V0) plastic box
Failure quota	50 /10E9
Life expectancy	100.000 h (*)
Maximum altitude	2000 m a.s.l.
Reference standard	IEC 1071-1/2 - IEC 1881 - UL 810
M10 screw terminals	Max 10 Nm
Fixing slots	Max 10 Nm
In according to fire protection standard	EN 45545-2

Safety system: These capacitors are designed with a particular type of polypropylene metalized film (PPMd film) that assures an open circuit at the end of life, if the operation is within the specification.
(*) For details please refer to page 75.

Capacitance Cn [µF]	Rated DC Voltage Un [V]	Repet. Peak Voltage Up [kV]	Surge Voltage Us [kV]	Max. RMS Current I_{MAX} [A]	Repet. Peak Current Ip [A]	Surge Current Is [kA]	Series Resistance Rs [mΩ]	Thermal Resistance R_{THC} [°C/W]	Weight [kg]	Terminal solution A / B	Part n. 416.85.
3800	550	0.8	1.2	120	9800	25	< 0.80	1.65	< 5.0	A / B	001.x
2800	650	1.0	1.4	120	9300	25	< 0.80	1.65	< 5.0	A / B	005.x
2250	750	1.1	1.6	120	9500	25	< 0.80	1.65	< 5.0	A / B	090.x
1500	900	1.4	1.9	120	9500	25	< 0.80	1.65	< 5.0	A / B	190.x
1200	1100	1.7	2.3	120	9600	25	< 0.80	1.65	< 5.0	A / B	290.x
1000	1250	1.9	2.6	120	9000	20	< 0.85	1.65	< 5.0	A / B	390.x
800	1350	2.0	2.9	100	8800	20	< 1.20	1.65	< 5.0	A / B	405.X
750	1450	2.2	3.0	100	8500	20	< 1.20	1.65	< 5.0	A / B	490.x
420	1800	2.7	3.8	100	8200	15	< 1.20	1.65	< 5.0	A / B	590.x
280	2200	3.3	4.6	80	7000	15	< 1.80	1.65	< 5.0	A / B	690.x
180	2800	4.2	5.8	80	6300	15	< 1.90	1.65	< 5.0	A / B	790.x
80	4000	6.0	8.5	60	4000	10	< 3.20	1.65	< 5.0	A / B	890.x
50	5000	7.5	10.0	50	3500	10	< 4.60	1.65	< 5.0	A / B	990.x
40	5500	8.3	10.0	40	3200	8	< 7.50	1.65	< 5.0	A / B	A90.x
30	6000	9.0	10.0	35	2700	8	< 8.20	1.65	< 5.0	A / B	B90.x

NOTES:
(**Cn**) Tollerance standard value: -15 ... +0%. Other tollerance values on request.
(**Cn**) - (**Un**) Capacitance and rated voltage standard values, other values on request.
(**Ur**) Maximum peak to peak alternating voltage component on the DC working voltage.
(**Rs**) Releted at 1 KHz.
(**R_{THC}**) Thermal registance CASE TO AMBIENT in natural cooling environment.
(**A/B solut**) .X="5" for A SOLUTION (M10 terminals on surface without handles) / .x="6" for B SOLUTION (M10 terminals on handle surface).

Box TYPE	
Standard box dimensions	mm 450 x 470 x 220
No. pieces x box:	4

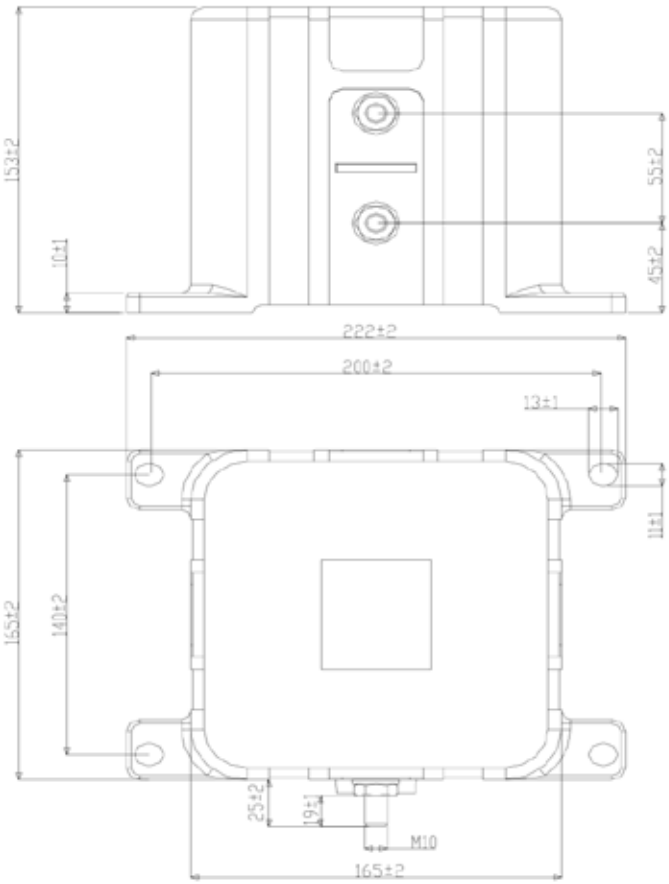

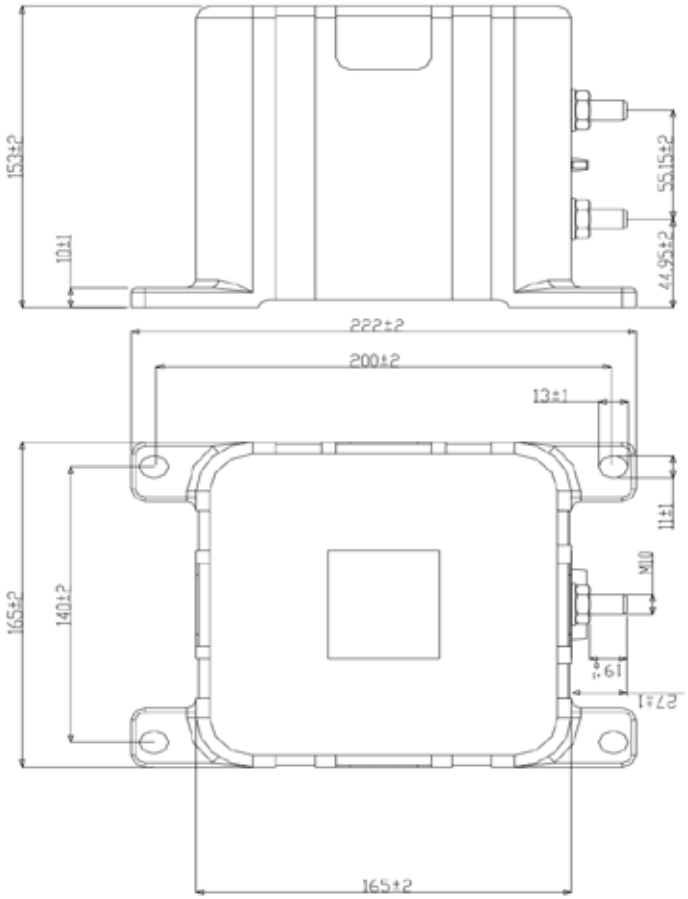

A SOLUTION

41685.xxx.5
M10 terminals on handless surface

B SOLUTION

41685.xxx.6
M10 terminals on handle surface

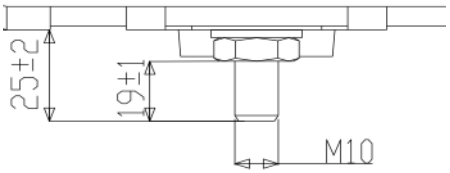

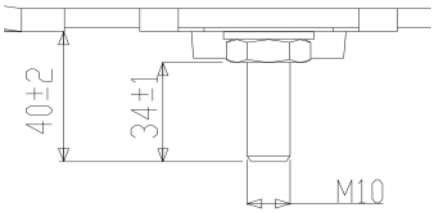

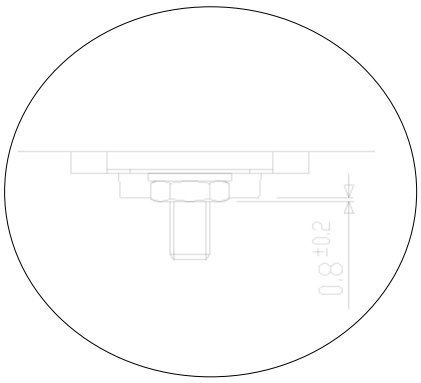

DC 83 P and DCH 83 P series

DC-Link Capacitors, high density and low inductance, resin filled in box plastic case

This Cubic Box variant is powered by the tried and proven Ducati Energia PPMh technology making it a competitive and reliable solution to all common DC-Link applications.
When coupled with the exclusive Ducati Energia High Crystallinity Film the DC 85 B construction provides superior temperature performance with 100khrs life @ 90°C HotSpot or extended life of 400khrs @70°C HotSpot.
The exclusive Ducati Energia metallization profiles guarantee high capacity stability and a controlled, open-circuit condition at the end of DC 85 B operational life, while maximizing the current capability.

Main characteristics:

- High Capacity Density
- Self-Healing Metallized Polypropylene Film
- V0 Plastic Case
- DRY Resin filling
- Low ESL

Main applications:

- DC-Link
- Energy Storage / Pulse Generation

DC 85 B Versions with Ducati Energia High Crystallinity Film:

- Standard Life expectancy 100.000hrs at 90°C HotSpot
- Extended Life expectancy 400.000hrs at 70°C HotSpot

General Characteristics

DC Voltage range	550 - 2350 V
Maximum ripple current (Imax)	165 Arms
Capacitance range	0,1 - 2,0 µF
Equivalent series inductance (ESL) - typical	30 nH
Tinned copper terminals	M8x10 internal thread
Container	Self-extinguishing (UL94 V0) plastic box
Filling	Self-extinguishing (UL94 V0) Polyurethane resin
Film Dielectric type	PPMDh film (*)
Maximum altitude	2000 m a.s.l.
Mounting position	Any position
Maximum torque for fixing slots	10Nm
Maximum torque for M8 terminals	4 Nm
Working ambient temperature	-25 .. +50 °C
Operating temperature MAX/ MIN (case)	-25 .. +85 °C
Maximum Hotspot temperature	+85 °C
Storage temperature	-25 .. +85 °C
Humidity category class (DIN 40040)	F
Life expectancy (@Un / 70°C hot spot)	100.000 h
Failure quota	50FIT
Reference standards	IEC 61071-1/2 IEC 61881 UL810
Material and insulation distance designed according to:	UL 810
In according to fire protection standard	EN 45545-2

Crepage Distance (mm)	35
Crepage Distance (mm)	35

Safety system: These capacitors are designed with a particular type of polypropylene metalized film (PPMd film) that assures an open circuit at the end of life, if the operation is within the specification.

DC 83 P

Capacitance Cn [µF]	Rated DC Voltage Un [V]	Repet. Peak Voltage Up [kV]	Surge Voltage Us [kV]	Max. RMS Current I_{MAX} [A]	Repet. Peak Current Ip [kA]	Surge Current Is [kA]	Series Resistance Rs [mΩ]	Thermal Resistance R_{THS} [°C/W]	Weight [kg]	Part n. 416.83.
1850	550	0.8	1.2	165	14.8	24	< 0.36	3,60	< 3	1900
1500	700	1.0	1.5	165	16.5	25	< 0.38	3,60	< 3	2900
1050	900	1.3	1.9	155	14.7	23	< 0.43	3,60	< 3	3900
700	1100	1.5	2.3	150	14.0	22	< 0.45	3,60	< 3	4900
580	1250	1.8	2.6	145	14.5	21.5	< 0.48	3,60	< 3	5900
460	1400	2.0	2.9	140	12.9	20.5	< 0.52	3,60	< 3	6900
340	1600	2.2	3.4	135	11.9	18	< 0.55	3,60	< 3	7900
240	1800	2.5	3.8	130	9.6	15	< 0.62	3,60	< 3	8900
190	2100	2.9	4.4	120	8.0	13	< 0.68	3,60	< 3	9900

DCH 83

Capacitance Cn [µF]	Rated DC Voltage Un [V]	Repet. Peak Voltage Up [kV]	Surge Voltage Us [kV]	Max. RMS Current I_{MAX} [A]	Repet. Peak Current Ip [kA]	Surge Current Is [kA]	Series Resistance Rs [mΩ]	Thermal Resistance R_{THS} [°C/W]	Weight [kg]	Part n. 416.83.
1850	650	0.9	1.4	155	16.7	25	< 0.41	3,60	< 3	1900
1350	850	1.2	1.8	150	14.9	25	< 0.43	3,60	< 3	2900
1050	1000	1.4	2.1	150	13.7	22	< 0.45	3,60	< 3	3900
670	1250	1.8	2.6	145	12.1	19.5	< 0.47	3,60	< 3	4900
550	1400	2.0	2.9	140	11.0	18	< 0.52	3,60	< 3	5900
460	1550	2.2	3.3	135	10.6	17	< 0.55	3,60	< 3	6900
340	1800	2.5	3.8	125	9.5	15	< 0.62	3,60	< 3	7900
240	2100	2.9	4.4	120	8.4	13	< 0.68	3,60	< 3	8900
190	2350	3.3	4.9	115	7.6	12	< 0.76	3,60	< 3	9900

NOTES:
(Cn) Tollerance standard value: -15 ... +0%. Other tollerance values on request.
(Cn) - (Un) Capacitance and rated voltage standard values, other values on request.
(Rs) Releted at 1 KHz.
(R_{THS}) Thermal resistance AMBIENT - HOT SPOT (air forced cooling system).
(I_{MAX}) Maximum RMS Current @ 50°C ambient temperature.

Box TYPE	
Standard box dimensions	mm 450 x 470 x 220
No. pieces x box:	8

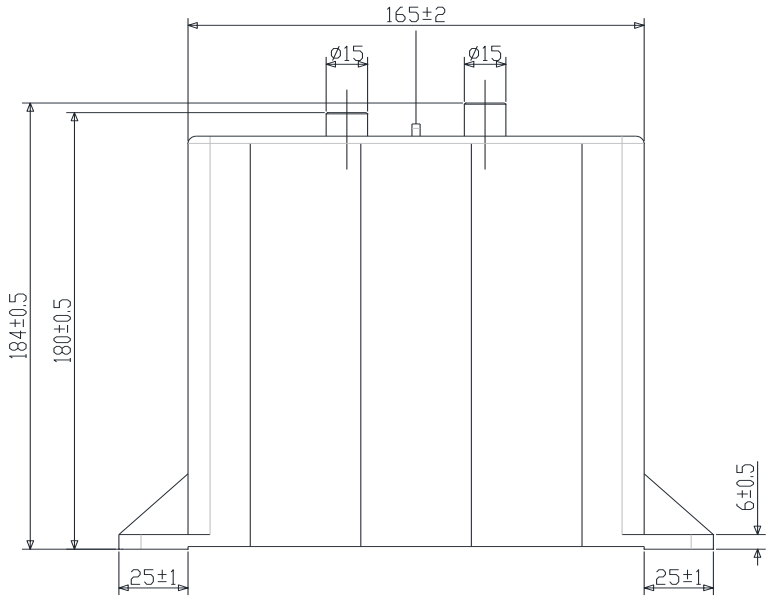
165±2
ø15
ø15
184±0.5
180±0.5
6±0.5
25±1
25±1

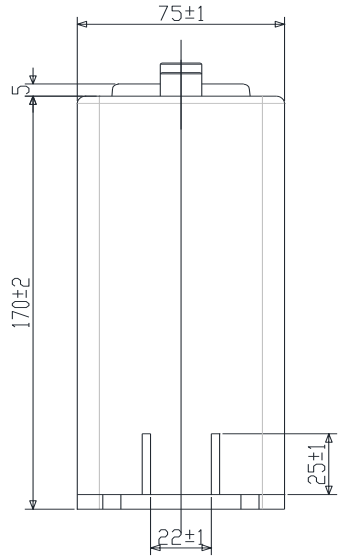
75±1
5
170±2
25±1
22±1

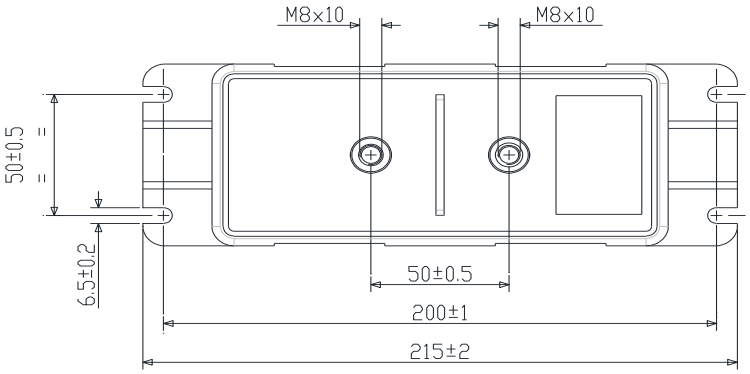
M8x10
M8x10
50±0.5
6.5±0.2
50±0.5
200±1
215±2

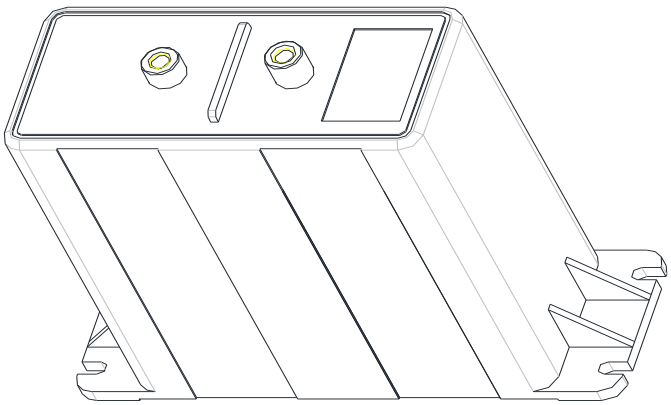

METALLIC BOX

DC 88 M series

High Density, Very Low Inductance DC-Link Capacitors - Prismatic Stainless Steel Case (non magnetic)

The metallic case and open resin casting allows high flexibility of construction: painted / stainless steel or aluminum cases with standard screw terminals or IGBT-specific busbar terminals. DC 88 M is powered by the tried and proven Ducati Energia PPMh technology making it a competitive and reliable solution to all common DC-Link applications.
When coupled with the exclusive Ducati Energia High Crystallinity Film the DC 88 M construction provides superior temperature performance with 100khrs life @ 90°C HotSpot or extended life of 400khrs @70°C HotSpot.
The exclusive Ducati Energia metallization profiles guarantee high capacity stability and a controlled, open-circuit condition at the end of DC 88 M operational life, while maximizing the current capability.
A special internal construction allows the minimization of field effects, thus guaranteeing real-life low ESL.

Main characteristics:

- High Capacity Density
- Self-Healing Metallized Polypropylene Film
- Steel, Stainless Stell or Aluminium Case
- DRY Resin filling
- REAL Low ESL

Main applications:

- DC-Link for Large Drives
- Energy Storage / Pulse Generation

DC 88 m Versions with Ducati Energia High Crystallinity Film:

- Standard Life expectancy 100.000hrs at 90°C HotSpot
- Extended Life expectancy 400.000hrs at 70°C HotSpot

General Characteristics

DC Voltage range	550÷1550 V(*)
Maximum ripple current	300 A
Capacitance range	Up to 10500 µF
Capacitance tolerance	standard: ±10% / on request: ±5%
Equivalent series inductance (LESR)	35 nH to 50 nH
Terminals	4x M10 screw type lts
Test voltage	U_{tc}= 4.5 kVac @50 Hz 60 s U_{tt}= 1.5 x Un_{DC} 10 s
Working temperature ($\theta_{MIN} - \theta_{MAX}$)	–25 / +85 °C
Storage temperature	–25 / +85 °C
Filling	Polyurethane resin
Dielectric	Self healing PPMd film
Container	Non painted, stailess steel, not magnetic casing
Failure quota	50 /10E9
Life expectancy	100.000 h (**)
Maximum altitude	2000 m a.s.l.
Reference standard	IEC 1071-1/2 - IEC 1881
M10 internal thread	Max 6 Nm
Fixing slots	Max 15 Nm

Safety system: These capacitors are designed with a particular type of polypropylene metalized film (PPMd film) that assures an open circuit at the end of life, if the operation is within the specification.
(*) Other values on request
(**) For details please refer to page 75.

DC 88 M series

High Density, Very Low Inductance DC-Link Capacitors - Prismatic Stainless Steel Case (non magnetic)

Capacitance Cn [µF]	Height H [mm]	Width w [mm]	Max. RMS Current I_{MAX} [A]	Repet. Peak Current Ip [A]	Surge Current Is [kA]	Series Resistance Rs [mΩ]	Thermal Resistance R_{THC} [°C/W]	Inductance Ls nH	Typical Weight [kg]	Part number 416.88.
Un_{DC}= 550 V Up= 8.5 kV Us= 1.3 kV										
3200	170	95	180	22.4	36	< 0.80	1.25	35	< 10.5	1091
5000	240	95	300	25.0	40	< 0.40	0.85	45	< 13.0	1192
5500	170	145	170	24.8	40	< 0.85	1.35	40	< 14.5	1293
8500	240	145	230	25.5	41	< 0.50	1.15	50	< 18.5	1394
6650	170	170	150	21.3	34	< 1.05	1.35	45	< 16.0	1495
10500	240	170	230	26.3	42	< 0.65	0.95	50	< 21.5	1596
Un_{DC}= 700 V Up= 1.05 kV Us= 1.6 kV										
2400	170	95	180	19.2	31	< 0.85	1.25	35	< 10.5	2091
3800	240	95	300	22.8	36	< 0.45	0.85	45	< 13.0	2192
4250	170	145	170	23.4	37	< 0.85	1.35	40	< 14.5	2293
6500	240	145	220	22.8	36	< 0.60	1.15	50	< 18.5	2394
5000	170	170	150	20.5	33	< 1.10	1.35	45	< 16.0	2495
8000	240	170	230	24.8	40	< 0.65	0.95	50	< 21.5	2596
Un_{DC}= 1000 V Up= 1.4 kV Us= 2.3 kV										
1600	170	95	180	19.2	31	< 0.85	1.25	35	< 10.5	3091
2530	240	95	300	20.2	32	< 0.45	0.85	45	< 13.0	3192
2650	170	145	170	18.6	30	< 0.85	1.35	40	< 14.5	3293
4300	240	145	220	21.5	34	< 0.60	1.15	50	< 18.5	3394
3250	170	170	150	16.3	26	< 1.10	1.35	45	< 16.0	3495
5060	240	170	230	20.2	32	< 0.65	0.95	50	< 21.5	3596
Un_{DC} = 1200 V Up = 1.7 kV Us = 2.4 kV										
1100	170	95	170	22.0	35	< 0.90	1.25	35	< 10.5	4091
1750	240	95	280	19.3	31	< 0.50	0.85	45	< 13.0	4192
1900	170	145	160	19.0	30	< 1.00	1.35	40	< 14.5	4293
3000	240	145	250	21.0	34	< 0.55	1.15	50	< 18.5	4394
2250	170	170	140	19.1	31	< 1.25	1.35	45	< 16.0	4495
3700	240	170	240	20.4	33	< 0.65	0.95	50	< 21.5	4596
Un_{DC}= 1350 V Up= 1.9 kV Us= 2.4 kV										
750	170	95	160	21.0	34	< 1.10	1.25	35	< 10.5	5091
1300	240	95	270	18.2	29	< 0.55	0.85	45	< 13.0	5192
1350	170	145	150	20.3	32	< 1.15	1.35	40	< 14.5	5293
2200	240	145	250	22.0	35	< 0.55	1.15	50	< 18.5	5394
1650	170	170	130	19.8	32	< 1.45	1.35	45	< 16.0	5495
2700	240	170	230	21.6	35	< 0.70	0.95	50	< 21.5	5596

Capacitance Cn [µF]	Height H [mm]	Width w [mm]	Max. RMS Current I_{MAX} [A]	Repet. Peak Current Ip [A]	Surge Current Is [kA]	Series Resistance Rs [mΩ]	Thermal Resistance R_{THC} [°C/W]	Inductance Ls nH	Typical Weight [kg]	Part number 416.88.
Un_{DC}= 1550 V	Up= 2.1 kV	Us= 2.4 kV								
550	170	95	150	18.7	30	< 1.15	1.25	35	< 10.5	6091
900	240	95	240	18.0	29	< 0.65	0.85	45	< 13.0	6192
1000	170	145	140	22.0	35	< 1.20	1.35	40	< 14.5	6293
1600	240	145	230	19.2	31	< 0.60	1.15	50	< 18.5	6394
1200	170	170	120	21.6	35	< 1.60	1.35	45	< 16.0	6495
2000	240	170	220	20.0	32	< 0.75	0.95	50	< 21.5	6596

NOTES:
(Cn) Tollerance standard value: ±10%. Other tollerance values on request.
(Cn) - (Un) Capacitance and rated voltage standard values, other values on request.
(Rs) Releted at 1 KHz.
(R_{THC}) Thermal resistance AMBIENT - CASE.
(I_{MAX}) Maximum RMS @ 45 °C ambient temperature.
(Ls) Standard stray inductance. On request very low stray inductance models.

RMS working current vs Ambient temperature

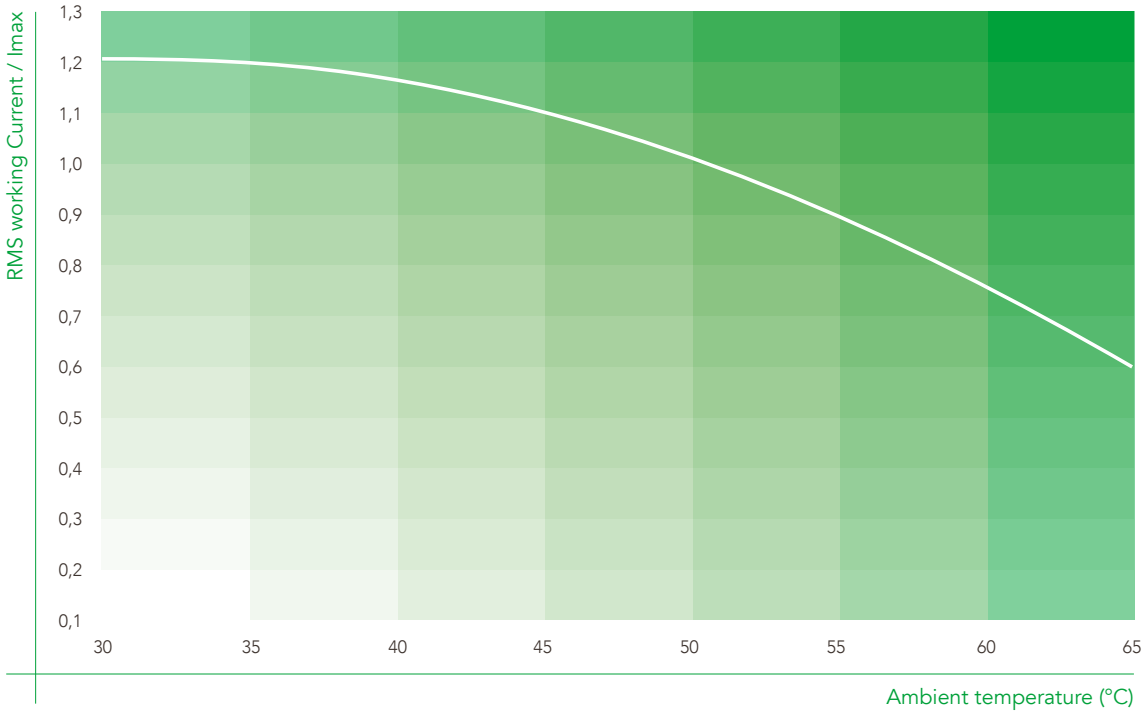

Expected life vs Temperature (on surface case, at 3/4 of height)

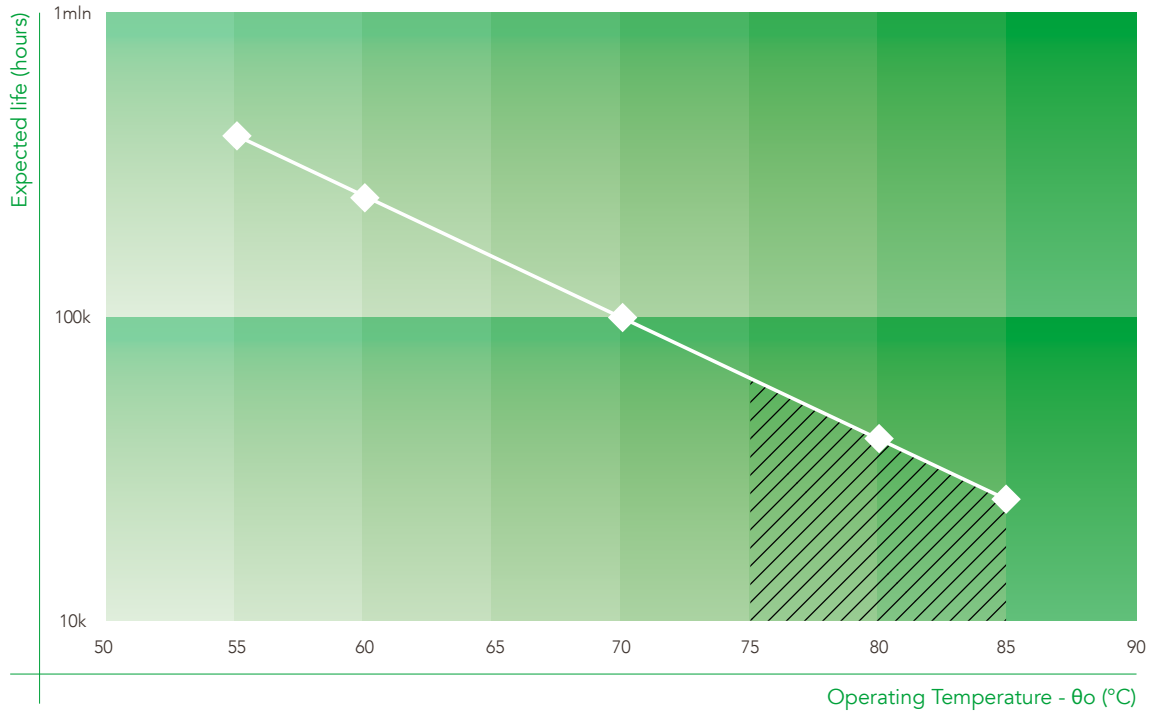

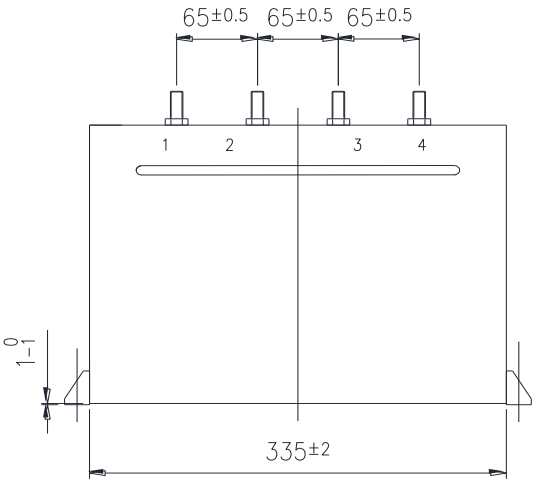

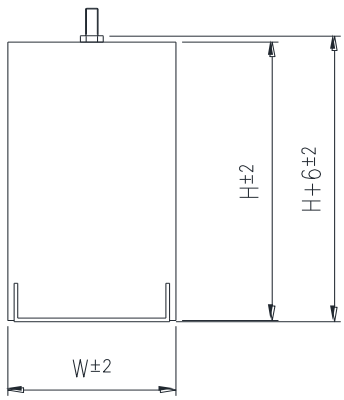

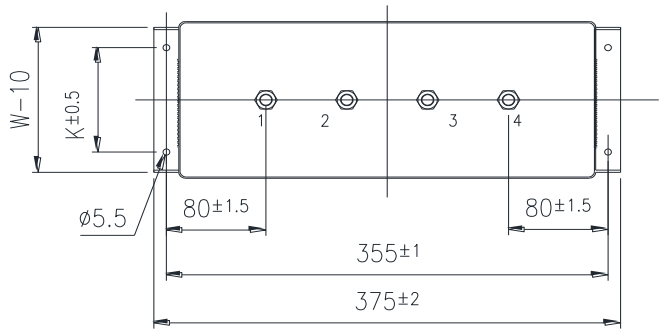

Safety system: This capacitors are designed with a particular type of polypropylene metalized film (PPM-D film) that assure an open circuit at the end of life, if the service is within the specification.

Width (Wmm)	k(mm)
95	50
145	100
170	100

DC 45 series

High Density, Low Inductance, Vacuum Silicone Oil impregnated DC-Link Capacitors - Prismatic Metal Case (steel, stainless steel or aluminum)

Designed for High-Voltage - High-Capacity applications, DC 45 can be made either with steel, stainless steel or aluminum cases and are vacuum impregnated with silicon oil.
The exclusive Ducati Energia metallization profiles guarantee high capacity stability and a controlled, open-circuit condition at the end of DC 45 operational life, while maximizing the current capability.
A special internal construction allows the minimization of field effects, thus guaranteeing real-life low ESL.

Main characteristics:

- High Capacity Density
- Self-Healing Metallized Polypropylene Film
- Steel, Stainless Stell or Aluminium Case
- Vacuum Silicone Oil Impregnation
- REAL Low ESL

Main applications:

- DC-Link for Large Drives (Marine/Railway Propulsion; Mining Equipment, etc)
- Energy Storage / Pulse Generation

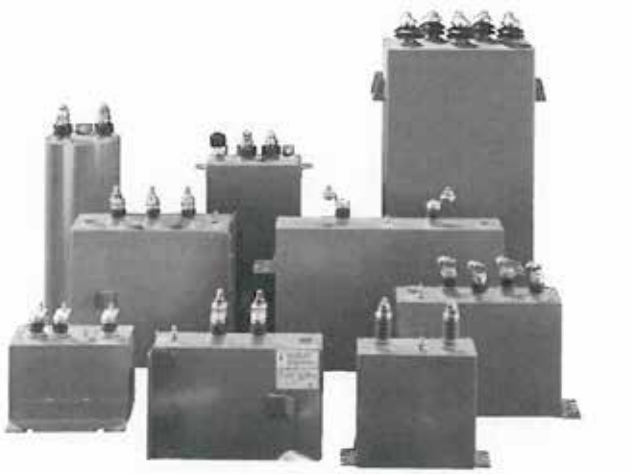

General Characteristics

DC Voltage range	800÷5000V (*)
Capacitance range	100÷5000 µF (*)
Capacitance tolerance	±5% / ±10%
Test voltage between terminals	1.5 Un 10 s
Test voltage between terminals and case	2 Un 50 Hz 60 s
Terminals	Bushings
Ambient operating temperature	– 25 / + 55 °C
Protection degree	–25 / +45 °C
Filling	Silicone Oil
Dielectric	Metallized polypropylene
Case	Steel
Life expectancy	100.000 h (**)
Installation	Vertical / horizontal
Reference standard	IEC 1071-1/2 - IEC 1881 - UL 810
In according to fire protection standard	EN 45545-2

(*) Standard values. other values on request.
(**) For details please refer to page 75.

H 360 mm			
Rated DC Voltage	**Capacitance Cn [µF]**	**Capacitance Cn [µF]**	**Capacitance Cn [µF]**
Un [V]	Base: (W) 125 x (L) 340 mm	Base: (W) 140 x (L) 340 mm	Base: (W) 165 x (L) 480 mm
800	12000	14000	26000
1200	6000	7000	13000
1800	2600	3000	5600
2400	1400	1650	2400
3000	850	950	1700
3600	400	480	850
4200	300	480	850
4800	300	360	650

H 515 mm			
Rated DC Voltage	**Capacitance Cn [µF]**	**Capacitance Cn [µF]**	**Capacitance Cn [µF]**
Un [V]	Base: (W) 125 x (L) 340 mm	Base: (W) 140 x (L) 340 mm	Base: (W) 165 x (L) 480 mm
800	18000	20500	36500
1200	8500	10000	18000
1800	3750	4250	8000
2400	2100	2500	4400
3000	1300	1500	2600
3600	850	1000	1700
4200	580	700	1250
4800	430	500	950

H 700 mm			
Rated DC Voltage	**Capacitance Cn [µF]**	**Capacitance Cn [µF]**	**Capacitance Cn [µF]**
Un [V]	Base: (W) 125 x (L) 340 mm	Base: (W) 140 x (L) 340 mm	Base: (W) 165 x (L) 480 mm
800	26000	29500	53000
1200	12000	14500	25000
1800	5500	6250	11500
2400	3000	3500	6500
3000	1750	3050	3650
3600	1150	1350	2450
4200	880	980	1500
4800	630	720	1100

H 815 mm			
Rated DC Voltage	**Capacitance Cn [µF]**	**Capacitance Cn [µF]**	**Capacitance Cn [µF]**
Un [V]	Base: (W) 125 x (L) 340 mm	Base: (W) 140 x (L) 340 mm	Base: (W) 165 x (L) 480 mm
800	32000	36500	62000
1200	15500	18000	32000
1800	7000	8000	14500
2400	3850	4500	7650
3000	2150	2450	4500
3600	1400	1650	3000
4200	1050	1200	2300
4800	760	900	1650

Overvoltage conditions, Peak / Surge Voltage.

Rated DC Voltage Un [V]	Max. Working Voltage Umax [V]	Reeoet. Peak Voltage Up [KV]	Surge Voltage Us [KV]
800	1040	1.3	1.7
1200	1560	2.0	2.5
1800	2340	3.0	3.8
2400	3120	4.0	5.0
3000	3900	5.0	6.3
3600	4680	5.9	7.6
4200	5460	6.9	8.8
4800	6240	7.9	10.1

NOTES:
(Umax) Working DC Voltage for a limited period of time, typically 4 hours/ day maximum.
(Up) Maximum Peak Voltage - repetitive condition. Pulse duration < 500µs
(Us) Surge Voltage, occasionally during the lifetime: < 100 times/life.

Equivalent serie inductance (ESL)
The values on this table are the maximum ESL refered to the case dimension of the capacitor. According to the number of terminals (2 or 4 - internal layout construction) and also the type of terminals (male or female, bushing height, ect…), ESL could be change.

Height	Base: 125 x 340 [mm]		Base: 140 x 340 [mm]		Base: 165 x 480 [mm]	
H [mm]	12 terminals	4 terminals	2 terminals	4 terminals	2 terminals	4 terminals
360	<130	<80	<135	<85	<145	<95
515	<145	<90	<150	<100	<165	<110
700	<160	<100	<170	<110	<185	<125
815	<180	<110	<200	<120	<220	<140

ESL (nH) - Measured according to IEC 61071, annex C

Thermal resistance (R_{TH})

R_{TH} (°C/W) Typical thermal resistance between case to ambient air, at thermal equilbrium.

Height	Base dimension Natural convection			Base dimension Forced air (>2m/s)		
H [mm]	125x340 [mm]	140x340 [mm]	165x480 [mm]	25x340 [mm]	40x340[mm]	165x480 [mm]
360	0.25	0.22	0.20	0.12	0.11	0.10
515	0.18	0.17	0.14	0.09	0.08	0.07
700	0.13	0.12	0.11	0.08	0.07	0.06
815	0.11	0.10	0.09	0.07	0.06	0.05

Mechanical Design
No magnetic metal case: Stainless steel case, no magnetic / Aluminum case / Steel case

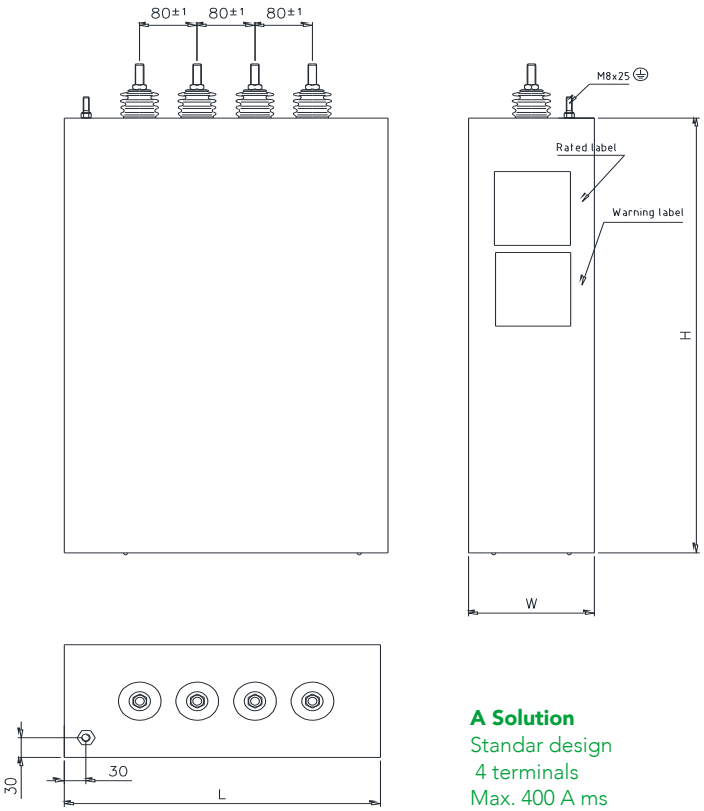

A Solution
Standar design
4 terminals
Max. 400 A ms

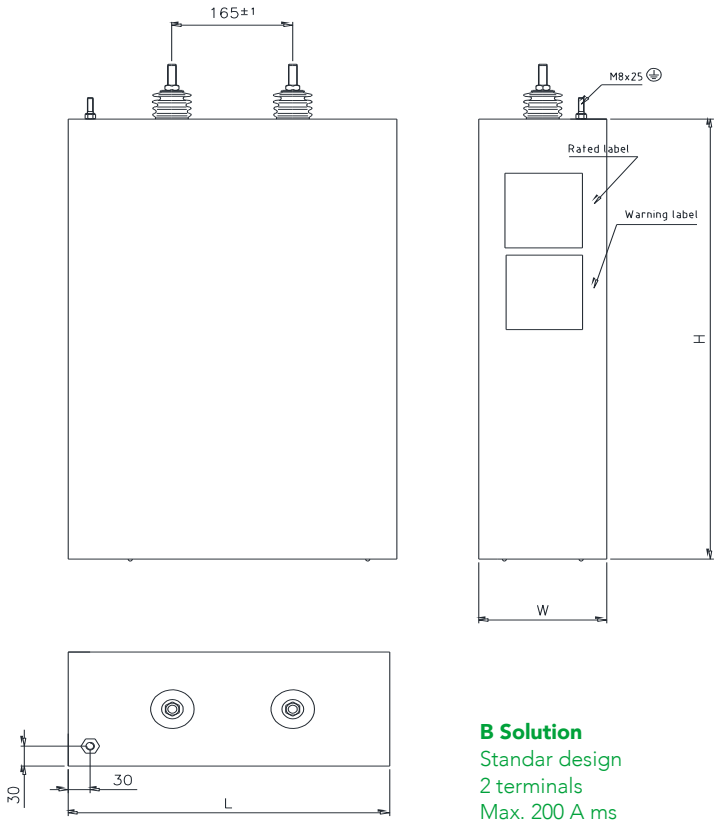

B Solution
Standar design
2 terminals
Max. 200 A ms

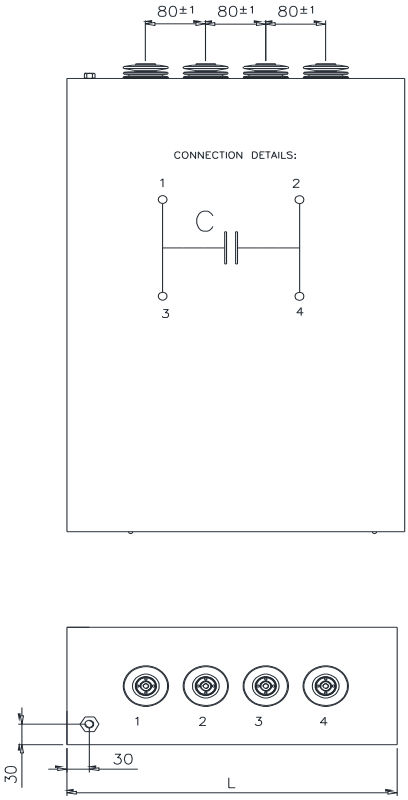

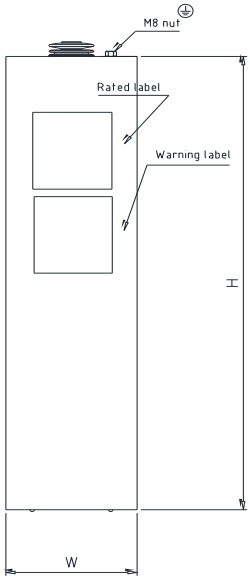

C Solution
Low inductance design
Female internal thread (on request also screw type solution) Max. 400 A rms

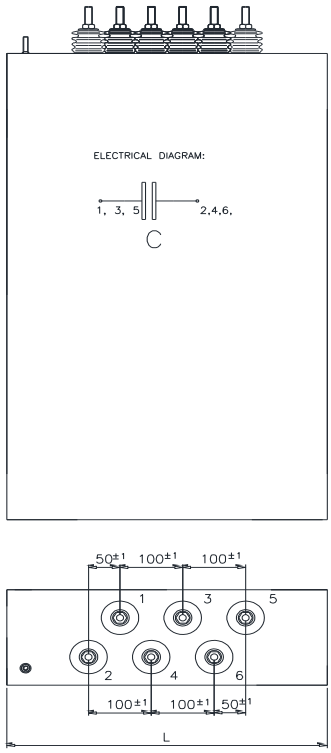

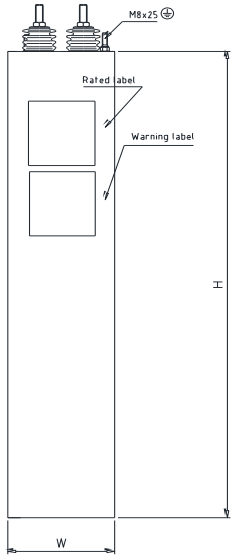

D Solution
Special design for High current - Low inductance solution
Max. 600 A rms

These are some examples of standard mechancal solutions.
According to customer specification, other mechanical design and dimensions, terminals position and quantity are available on request.

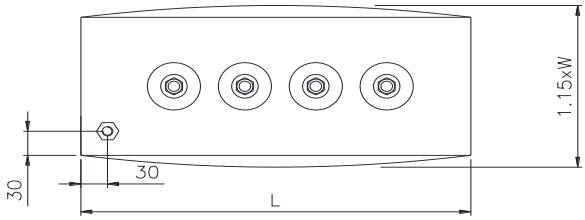

NOTES:
In case of two or more units connected as a battery, please take also into consideration the maximum deformation of W (width of the case):
at the end of life, this dimension may be grow up to 15% greater.

Mounting brackets (suggested)
For H < 500 mm, use only one mounting brecket for each side.
Take also into consideration the type of fixing frame (vertical / horizontal, resting or cantilevered): it may be necessary to use two mounting brackets on each side.
In case of doubts, please contact DUCATI technical department to choice the right solution.

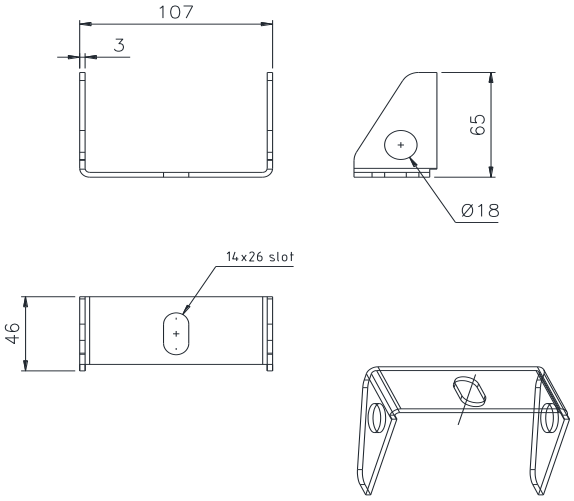

MB1 solution
Suggested for cabinet with dimension W : 125 and 140 mm
Code: 315104102

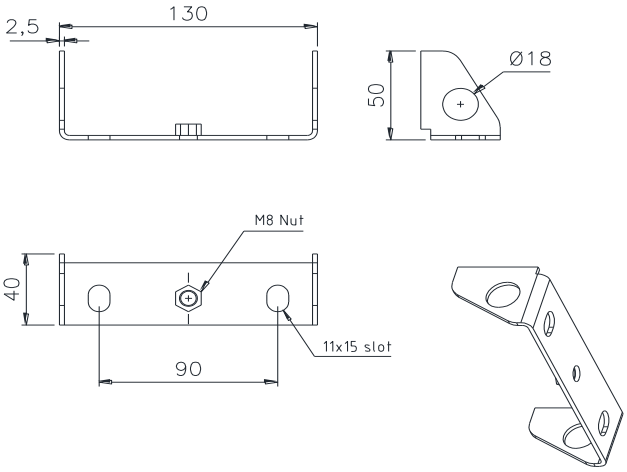

MB2 solution
Suggested for cabinet with dimension W : 140 and 165 mm
Code: 315104138

Terminals and Connections

Screw type solution
Material: tinned copper

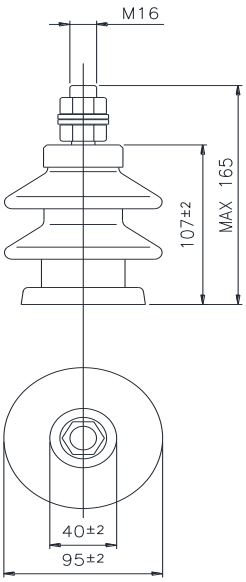

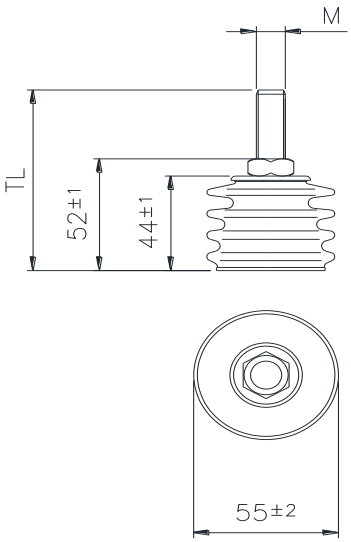

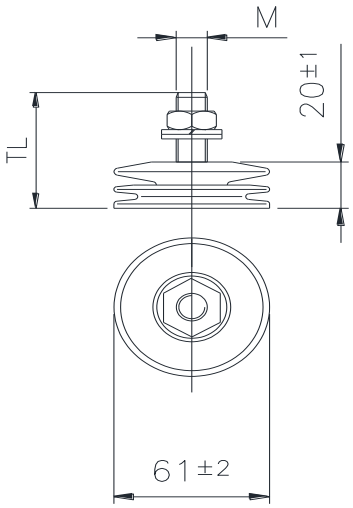

TYPE TC1
Bushing:
- Ceramic - brown colour

Connector
- type: M12 / M16
- lenght: LT on request

TYPE TC2
Bushing:
- Ceramic - brown colour

Connector
- type: M12 / M16
- lenght: LT on request

Creepage distance: 85mm
Air distance: 50mm

TYPE TCP1
Bushing:
- Plastic - grey / black colour
- Height: 20mm

Connector
- type: M12 / M16
- lenght: LT on request

Creepage distance: 42mm
Air distance: 30mm

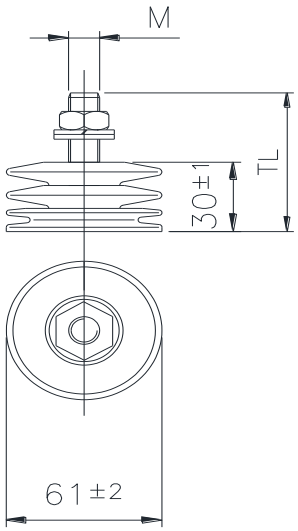

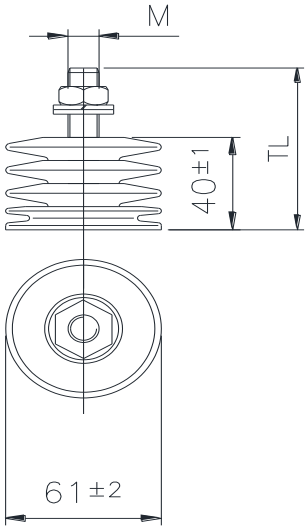

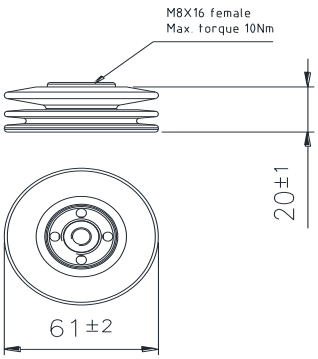

TYPE TCP2
Bushing:
- Plastic - grey / black colour
- Height: 30mm

Connector
- type: M12 / M16
- lenght: LT on request

Creepage distance: 64mm
Air distance: 40mm

TYPE TCP3
Bushing:
- Plastic - grey / black colour
- Height: 40mm

Connector
- type: M12 / M16
- lenght: LT on request

Creepage distance: 85mm
Air distance: 50mm

TYPE TCP4
Bushing:
- Plastic grey / black colour
- Height: 20mm (available also 30 / 40 m)

Connector
- type: female M8 (available also M12 / M16)

Creepage distance: 42mm
Air distance: 30mm

Terminals and Connections Female internal thread
Material: tinned copper

Pressure Switch

Adjustable pressure switch with SPD contacts - Normally closed
IP54 cover - Switch rating: 6A / 250Vac
Available on two different solution, according to the maximum dimension accepted:

Standard solution:

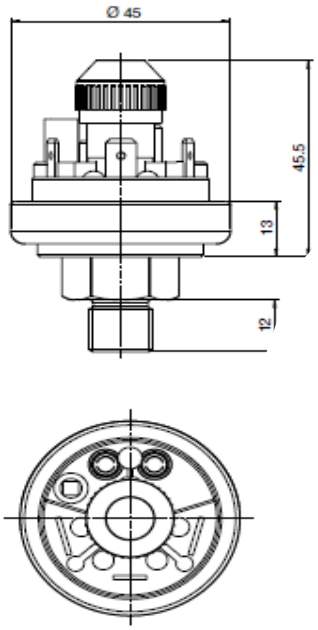

On request, solution with reduced dimension:

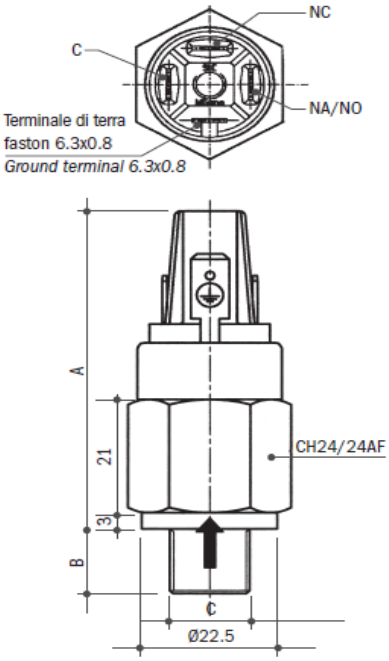

IP 54 Cover

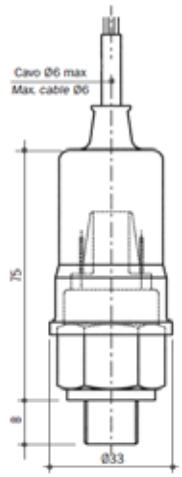

APPENDIX

TECHNOLOGIES

PPM / MKP technology Metallized polypropylene technology (PPM – MKP) utilizes a vacuum evaporation technique to deposit an extremely thin layer of metal on one side of the polypropylene film.
The capacitor elements built using this technology are obtained by winding two polypropylene films. The capacitor plates consist in the metallized surface of the two films and the dielectric is the propylene film itself. The main advantage of capacitors with metallized plates is their self-healing capacity. This means that they are capable of restoring their electrical properties following the occurrence of a short circuit between the plates. Due to the reduced thickness of the plates, the short circuit current generated in the area of a fault is capable of vaporizing the metal coating; the short circuit is thereby automatically extinguished without an appreciable reduction in capacitance or expenditure of energy.

PPMh and PPMd technology The continuous research conducted in Ducati Energia laboratories has lead to the development of a polypropylene film with a special metallization, whose purpose is to increase gradient of voltage without decreasing lifetime. Thanks to this innovative metallization treatment, the capacitor has a significantly dimension reduction and maintains its dielectric properties and performance in terms of both current and voltage:

- PPMh is film designed for AC voltage, can support also DC applications, agree with technical data;
- PPMd is designed for DC voltage, with high superimposed ripple.

PPMdH high density / high temperature technology The latest development of Ducati Energia research is a particularly crystalline film with a special metallization type. The result is a superior capability in terms of voltage gradient and temperature stability. PPMdH therefore provides:

- Up to +25% capacity in the same volume
- Up to +20°C Operating Temperatures, without current or lifetime derating

TERMS AND DEFINITION

(According to IEC 61071)
Rated capacitance (Cn)
Capacitance value rated at ambient temperature (20 ±5°C) and at the rated voltage. For capacitors made with metallized polypropylene dielectric film, the capacitance and dissipation factor change versus temperature. Typical graphs of these deviations are shown in the below diagrams.

Capacitance change with temperature (general guide)

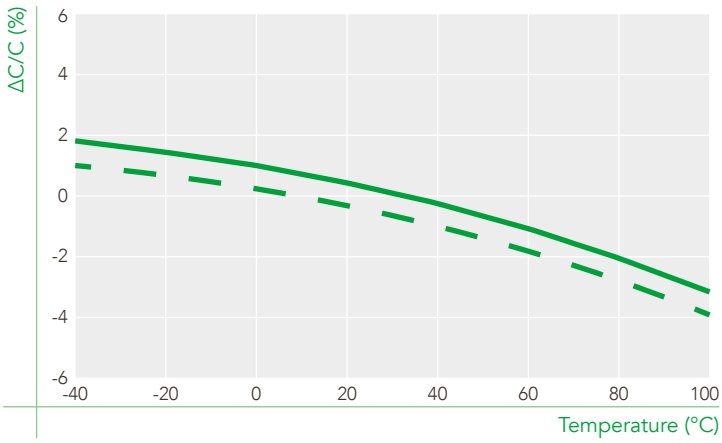

Dielectric Dissipation factor change with temperature f=1KHz - (general guide)

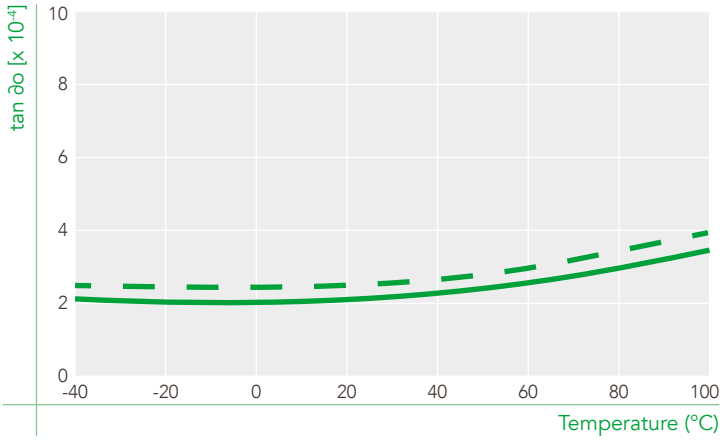

Tolerance on capacitance
The maximum admitted deviation from the rated value of capacitance, measured at ambient temperature (20 ±5°C) and at the rated voltage.

Rated AC Voltage (Un AC)
The maximum operating peak recurrent voltage of either polarity of a reversing type wave form, for which the capacitor has been designed.

Rated DC Voltage (Un DC)
The maximum operating peak voltage of either polarity but of a non-reversing type wave form, for which the capacitor has been designed.

Rated Rms voltage (Urms)
Root mean square of the maximum permissible value of A.C. voltage, in continuous operation. In case of sinusoidal wave form voltage, the following relationship could be considered:

$$U_N = U_{RMS} \cdot \sqrt{2}$$

Non-recurrent surge voltage (Us)
A peak voltage inducted by switching or any other faults or disturbance of the system, which is allowed for a maximum of 500 times and for a durations shorter than 100 msec.

Ripple voltage (Ur)
The peak-to-peak alternating component of the unidirectional voltage.

Illustrative Voltage Curve for terms and definitions of AC application

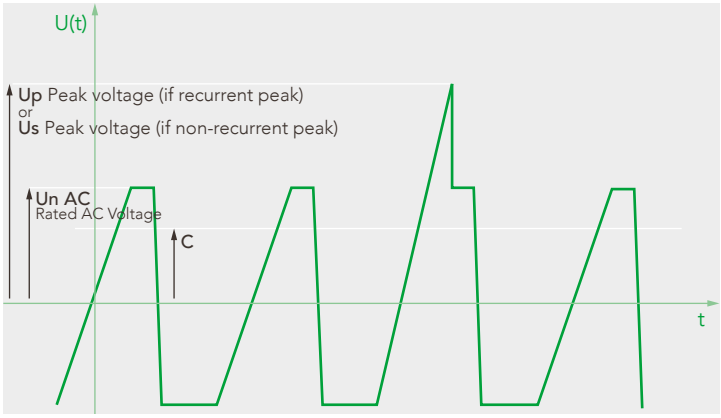

Illustrative Voltage Curve for terms and definitions of DC application

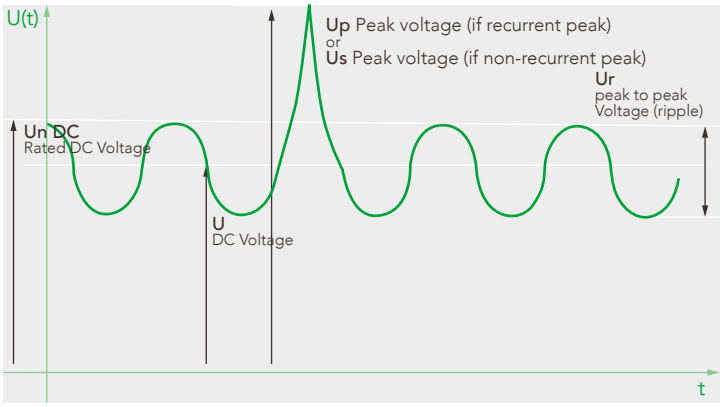

Maximum current (Imax)
The maximum rms value of permissible current in continuous operation. This value is related to the maximum power dissipation at the highest permitted temperature of the case (Ø max) at which the capacitor may be operated. Operating at the maximum r.m.s current (IMAX), the capacitor produces a case temperature rise of about 10 – 15 °C over the ambient, according to the capacitor type (please see RTHC for each models) and the application.
To avoid thermal instability on the capacitor the case temperature of the capacitor must not exceed the maximum operating temperature (Ø max), so it could be necessary to reduce the ambient temperature with a cooling air system or to reduce the Imax current.

Maximum peak current (Ipk)
The maximum current amplitude which occurs istantaneously during continuos operation. For some capacitors series and according to the typical application (high or low distorsion), it's possible to describe two different maximum peak current:

Ipk Cw (continuos waveform): for linear or low distorsion current waveform - picture 1

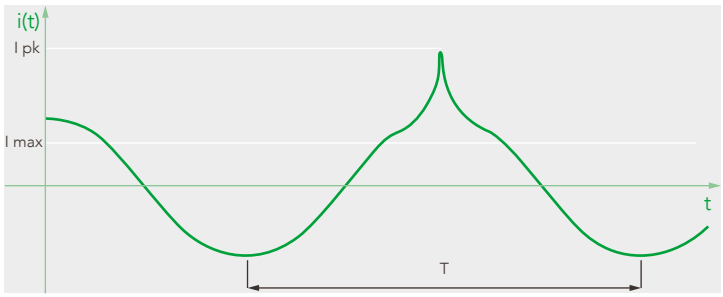

Ipk Iw (Impulsive waveform):
for high distorsion current waveform, typical when the t0/T < 0,1%
- picture 2

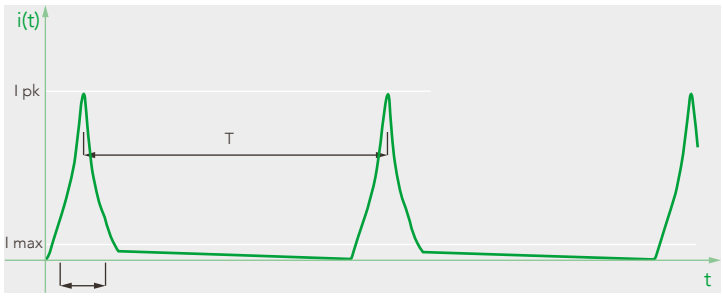

Rate of voltage rise (du/dt)
Maximum permitted repetitive rate of voltage rise of the operational voltage
Peak surge current (Is)
The admissible peak current inducted by switching or any other faults or disturbance of the system, which is allowed for a maximum of 500 times and for a durations shorter than 100 msec.

Equivalent series resistance (RESR)
An effective resistance which, if connected in series with an ideal capacitor with the same value capacitance,would have a power loss equal to the active power dissipated in the capacitor under specified operating conditions. Normally, for frequency lower than the resonanting one, the following relationship could be considered:

$$R_{ESR}=R_S+(\tan\partial_0/2\pi fC)$$

Series resistance (R_S)
It is the resistance produced by the current heat losses $I^2_{RMS}\cdot R_S$ in the capacitor.

Equivalent series inductance (L_{ESR})
The value of equivalent inductance that the capacitors has due to the internal connections, terminals, winding characteristics and physical dimensions.

Thermal resistance (R_{THC})
It is the thermal resistance (°C/W) between the hottest point on the case of the capacitor in thermal equilibrium and the natural cooling environment, with the temperature measured approximately at 0,1 meter away from the capacitor container and at two-third of the height from its base. The following relationship could be considered:

$$P_{MAX} = 1/R_{THC}\,(Ø_C - Ø_{MAX})$$

Maximum dissipation factor (tanΔ max)
Maximum tangent of the loss angle, expressed as the ratio between the equivalent series resistance and the capacitive reactance of the capacitor at 50Hz sinusoidal frequency. The nominal value (tan) is calculated as follows:

$$\tan\partial=2\pi fCR_{ESR} = \tan\partial_0 + 2\pi fCR_S$$

Safety area
The following charts shown the maximum permissible voltage or current in case of an overload operation. The amplitude of overvoltages or overcurrents may be tolerated without significant reduction in the life time of capacitor, if the case temperature of the capacitor is within the operating temperature.

Safety area for overload Voltage

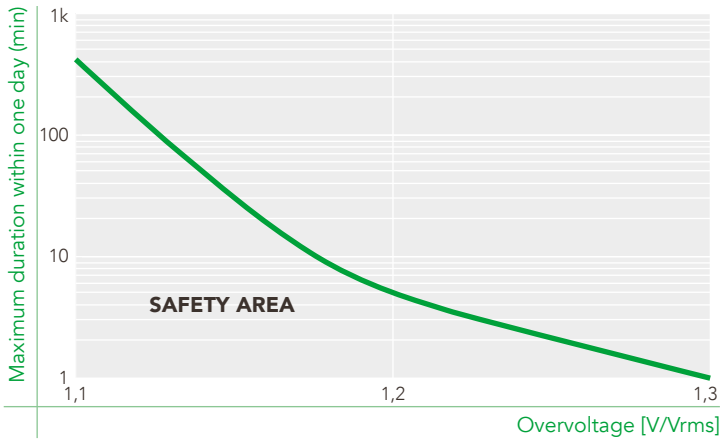

Safety area for overload Current

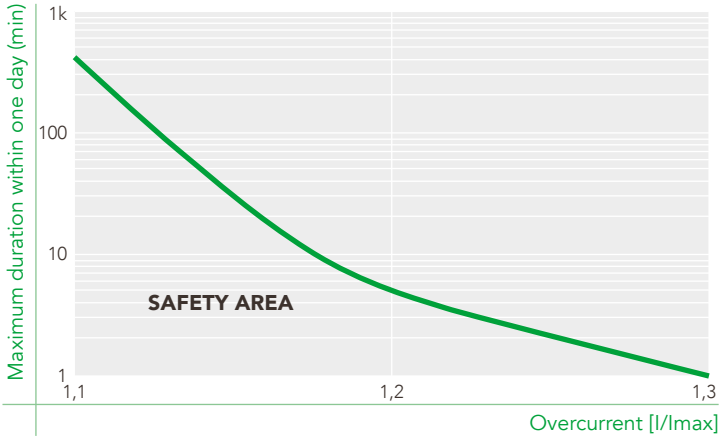

Voltage test between terminals (Utt)
Routine test of all capacitors conducted at room temperature, prior to delivery. The capacitor shall be subjected for 10 s to a test voltage applied between the terminals. During the test, neither puncture nor flashover shall occur, self-healing breakdowns are permitted. For more details regarding the value of test voltage, please see the data sheet for each single capacitor model.

Voltage test between terminals and case (Utc)
Routine test of all capacitors conducted at room temperature, prior to delivery. The capacitor having all terminals insulated from the container shall be subjected for 10 s to a AC test voltage applied between terminals (joined together) and the container. During the test, neither puncture nor flashover shall occur. For moredetails regarding the value of test voltage, please see the data sheet for each single capacitor model.

Lowest operating temperature (Ø min)
Lowest permissible case temperature, in thermal equilibrium, at which the capacitor may be used.

Maximum operating temperature (Ø max)
Highest permissible case temperature, in thermal equilibrium, at which the capacitor may be used.

Climatic categories
F class:
- maximum relative humidity 75% - annual means,- permitted maximum 95% for 30 days/year,- condensation not permitted.

Cooling-air temperature (Øamb)
Temperature of the cooling air measured at the hottest position of the capacitor, under steady state conditions, midway between two units. If there is only one unit involved, it is the temperature measured at a point approximately 0,1 m away from the capacitor container and two-thirds of the height from its base.

Hotspot temperature (HS)
The highest temperature present inside the capacitor dielectric .
Since RTH the thermal resistance between internal dielectric hotspot and the hottest position of the capacitor case, the HS value (°C) can be calculated with the following formula:

$$HS = Øamb + P_{MAX} R_{TH}$$

SAFETY

Capacitor Protection:

- Against accidental contact
In accordance with IEC 61071, all capacitors are checked by 100% routine test (voltage test between terminations and case). Accessible capacitors must be earthed at the bottom stud or with an additional earthing clamp.

- Overload and failure at the end of service life
All described capacitors are "self-healing": in the event of a voltage breakdown the metal layers around the breakdown channel are evaporated by the temperature of the electric arc between the electrodes, and create small overpressure. An insulation area is formed which is reliably resistive and voltage proof for all operating requirements of the capacitor. The capacitor remains fully functional during and after the breakdown. In the event of overvoltage or at the end capacitor service life, an increasing number of selfhealing breakdowns may cause rising pressure inside the capacitor and brake the can. To prevent it, the capacitor is fitted with an obligatory "overpressure mechanism". This safety mechanism is based on an attenuated spot at one of the connecting wires inside the capacitor. When the rising pressure, the casing begins to expand, and disconnects the attenuated spot wire and the current path is interrupted irreversibly. It has to be noted that this safety system can act properly only within the permitted limits of loads and overloads.The capacitors in rectangular case are provided with an overpressure switch that would signalize a rising pressure inside the case. A corresponding external safety circuit which disconnects the capacitor immediately in such event has to be provided by the user.

- Overvoltages and Short Circuits
As shown above, the capacitors are self-healing and regenerate themselves after breakdowns of the dielectric. For voltages within the permitted testing and operating maximum the capacitors are overvoltage-proof. They are also proof against external short circuits as far as the resulting surge discharges do not exceed the specified current limits (IS).

Operating life
The capacitors have been designed for an average service life of 100,000 hrs (with 50 fit permitted). Above all, the operating life of the capacitors depends on the temperature inside during operation, and the field strength in its dielectric. The following diagram demonstrates the correlation between service life, hot spot temperature, and operating voltage.

Life vs Operating Voltage and Hot Spot Temperature (general guide)

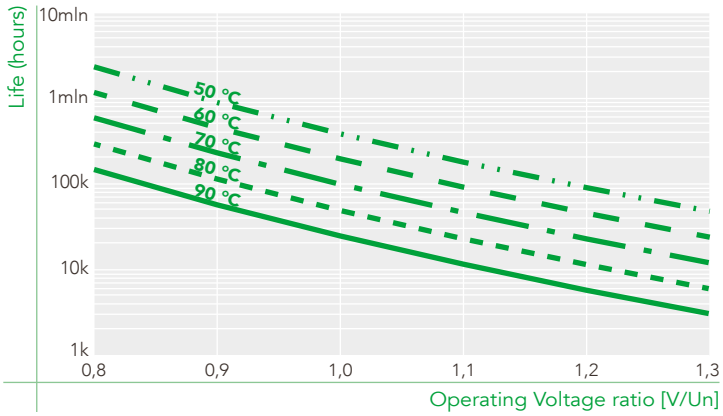

FIT vs Hot Spot Temperature (general guide)

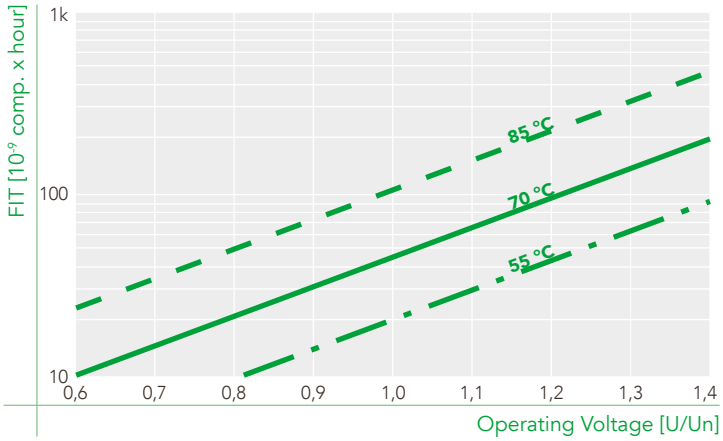

GENERAL SAFETY INSTRUCTIONS

Connection
Connection at threaded studs have to be made between two nuts. It is not recommended to solder cables to the terminals. Permitted torque for screw connections. See individual data sheets for each range.

Capacitors overpressure device:
All the AC capacitors with overpressure device shall be connected with sufficiently flexible leads to permit the functioning of the mechanism, and sufficient space for expansion of the capacitor case must be left above the terminals. Depending on the specific dimensions of the capacitors the case could expand between 15 mm and 30 mm.

Mounting Location
As mentioned, the useful life of a capacitor may be reduced dramatically if exposed to excessive heat. To avoid overheating the capacitors must be allowed to emit their heat losses unhindered and shall be shielded from external heat sources. If attenuating circumstances give cause for doubt, special tests should be conducted to ensure that the permitted maximum temperature of the capacitor is not exceeded even under the most critical ambient circumstances. It should be noted that the internal heat balance of large capacitors is only reached after a couple of hours.

Mounting position
Capacitors with liquid or viscous filling shall be installed upright with terminals facing upwards. Please consult our technical department if different mounting position is required. Capacitors with hard resin filling can be mounted in any position without restrictions.

Earthing
Capacitors with a metal case must be earthed at the mounting stud or by means of a separate metal strap or clamp.

Discharge
If there is no discharge of the capacitors provided by external circuits, the capacitors should be provided with discharge resistors. In any event, the poles of the capacitors must be short-circuited before being touched. Note that capacitors with nominal voltages above 750 V in particular may regenerate new voltage at their terminals after having been short-circuited just for short periods. This condition results from the internal series connection of the capacitor elements and will be avoided by storing them permanently short-circuited.

DISPOSAL
Our capacitors do not contain PCB, solvents, or any other toxic or banned materials. The impregnants and filling materials contain vegetable oil or polyurethane mixtures. The capacitors are not rated as hazardous goods in transit and do not have to be marked under the Regulations for Hazardous Goods. They are rated WGK 0 (water risk category 0 "no general threat to water"). We recommend disposing of the capacitors through professional recycling centres for electric/electronic waste. The capacitors can be disposed of as follows:

- Capacitors: acc. to European Waste Catalogue(EWC) No. 160216 ("Components taken fromdiscarded equipment")
- Liquid filling materials: acc. to EWC No. 080402 ("Wasteadhesives and sealants free of halogenated solvents")
- Hardened filling materials: acc. to EWC No. 080404("Hardened adhesives and sealants").

Caution: When touching or wasting capacitors with activated break-action mechanism, please consider that even after days and weeks these capacitors may still be charged with high voltages! Capacitors are hermetic sealed, to maintain a long operating life and for the correct functioning of the break action mechanism, please pay special attention not to damage any parts of the can, cover or isolators.

NOTE:
Capacitors of the DC series are not provided with an internal safety mechanism which would separate them in a controlled and reliable manner from the energy supply in case of malfunctioning. These capacitors consist mainly of polypropylene (up to 90%), i.e. their energy content is comparably high. Capacitors may rupture and ignite as a result of internal faults or external overload (e.g. temperature, overvoltage, harmonic distortion). It must therefore be ensured by proper measures that they not perform any hazard for their environment in the event of failure. Energy content in case of fire: approx. 40 MJ/kg.

MOUNTING AND OPERATING INSTRUCTIONS

I.SCOPE
These safety recommendations and requirements apply tothe following power electronics capacitors and standards. Their purpose is to describe the state of technology whichmust as a rule be adhered to in all relevant contracts forgoods and services.
1)Capacitors for power IEC / DIN EN 61071 electronics (PEC).
2)Capacitors for railway IEC / DIN EN 61881 applications (PEC).

II.GENERAL SAFETY RULES
Since power capacitors are electrical energy storage devices, they must always be handled with caution. Even after being turned off for a relatively long period of time, they can still be charged with potentially lethal high voltages.

III.GENERAL CONDITIONS FOR STORAGE AND USE
1)The manufacturer's installation, application and maintenance instructions and the relevant standards must always be complied with.
2)Capacitors must never be stored or used outside the specified temperature ranges.
3)Capacitors may not be stored or operated in corrosive atmospheres, particularly not when chlorides, sulfides, acids, alkalis, salts, organic solvents or similar substances are present.
4)The maximum temperatures (including inherent heat) voltages, currents, power, reactive power, thermal resistances, frequencies, discharge times and switching frequencies specified in the data sheet must be adhered to.
5)A means of sufficient dissipation of heat loss (fan, cooling) or escaping gases in case of malfunction must be provided. Required minimum distances (e.g. to sources of heat) must be maintained.
6)Specified torques for electrical connections and fasteners must be adhered to.
7)Mechanically or electrically damaged, leaky or otherwise damaged capacitors may not be used or continue to be used.
8)Existing protective devices of the capacitors may not be manipulated, removed or impaired in their function.

IV.INTERNAL PROTECTIVE DEVICES

1)Internal protective devices offer basic protection against certain internal faults, aging and overload.
2)Internal protective devices alone are not sufficient to prevent all conceivable dangers in case of malfunction. The so-called self-healing capability is not the same as failsafe system stability.
3)Depending on their protective mechanism, internal protective devices are subject to technical and functional limits which when exceeded will definitely cause malfunctions. Such violations can be excess temperature, overvoltage, wrong application, wrong installation, faulty maintenance, mechanical damage, or operation outside the technical limits of the specification.
4)Most internal protective devices can interrupt the voltage only within the capacitor. They are not fuses in the classical sense such as cable or device fuses which interrupt the voltage upstream from the faulty system component.

V.RISK FACTORS FOR THE CAPACITOR

The most frequent risk factors which cause capacitor damage and possibly also the failure of the internal protective devices are:
1)Exceeding the permissible temperature on the capacitor surface (a continuous increase temperature of 7 K cuts life expectancy in half).
2)Over voltages, over currents and high inrush currents even if they only occur briefly or cyclically (a continuous increase in the operating voltage of the capacitor of 8% cuts life expectancy in half).
3)Network harmonics, resonances created by harmonics or flicker even when they occur only briefly or cyclically.
4)Aging of the lighting equipment and consequential excess temperature or high UV stress.
5)Failure of other components in a common circuit and consequential over voltages or over currents.
6)Interaction with other reactive power components, and also parasitic capacitances (cable) or inductivities in common circuits.
7)Even if the test based on the capacitor standard is passed, this does not ensure comprehensive protection against all possible overloading.
8)During the operation of thyristor-switched capacitor system, high DC voltages can occur continuously on the capacitors of compensation systems which are not switched on. These DC voltages must be considered when designing the capacitors and the discharge devices.

VI.RISKS WHEN A FAULT OCCURS

1)Power capacitors can be a significant risk in the case of failure due to their stored energy and/or their properties during operation in networks with high short-circuit power.
2)Power capacitors can actively fail when internal or external protective devices are missing, incorrectly dimensioned or have failed. They can burst, burn or, in extreme cases,explode.

VII.RISK MINIMIZATION

1)The capacitor manufacturer cannot predict all possible stresses which a power capacitor can be subjected to and which must be taken into account in the design. This means that the user bears crucial co-responsibility here. For this reason alone, safety and quality should be the top priorities when a capacitor is selected. This is why we urgently recommend the use of capacitors with appropriate internal protective devices.
2)Before designing the application, capacitors must be checked for their suitability for this particular application. All influences (parameters) must be considered. Unexamined use in an application may have serious consequences. Particularly with sensitive applications, the internal protective devices of the capacitors should be supplemented by the user with suitable external protective measures. External protective measures are even mandatory when capacitors are used without internal protective devices.
3)When power capacitors are used, suitable measures must always be taken to eliminate possible danger to humans, animals and property both during operations and when a failure occurs. This applies to capacitors both without and with protective devices.

Instruments and systems for electrical measurements

Compensation d'énergie reactive BT: condensateurs, composants, batteries fixes et automatiques, filtres actifs

Capacitors MV and HV power factor correction systems and filters

Motor capacitors

DUCATI energia

HISTORY DRIVES THE FUTURE

DUCATI energia S.p.A.
Via M.E.Lepido,182
40132 Bologna, Italy

+39 051-6411511
+39 051-402040
info@ducatienergia.com

www.ducatienergia.it

Power electronic capacitors

X-ON Electronics

Largest Supplier of Electrical and Electronic Components

Click to view similar products for Film Capacitors ***category:***

Click to view products by Ducati Energia ***manufacturer:***

Other Similar products are found below :

F339X134748MIP2T0 F450KG153J250ALH0J 750-1018 FKP1-1500160010P15 FKP1R031007D00JYSD FKP1R031507E00JYSD FKP1U024707E00KYSD 82DC4100CK60J 82EC1100DQ50K PFR5101J100J11L16.5TA18 PME261JB5220KR19T0 A451GK223M040A A561ED221M450A QXJ2E474KTPT QXL2B333KTPT R49AN347000A1K EEC2G505HQA406 B25668A6676A375 B25673A4282E140 BFC233868148 BFC2370GC222 C3B2AD44400B20K C4ASWBU3220A3EK CB027C0473J-- CB177I0184J-- CB182K0184J-- 23PW210 950CQW5H-F SBDC3470AA10J SCD105K122A3-22 2N3155 A571EH331M450A FKP1-2202KV5P15 FKS3-680040010P10 QXL2E473KTPT 445450-1 B25669A3996J375 46KI322000M1M 46KR415050M1K 4BSNBX4100ZBFJ MKP383510063JKP2T0 MKPY2-.02230020P15 MKT 1813-368-015 4055292001 46KN410000N1K EEC2E106HQA405 EEC2G205HQA402 EEC2G805HQA415 P409CP224M250AH470 82EC2150DQ50K