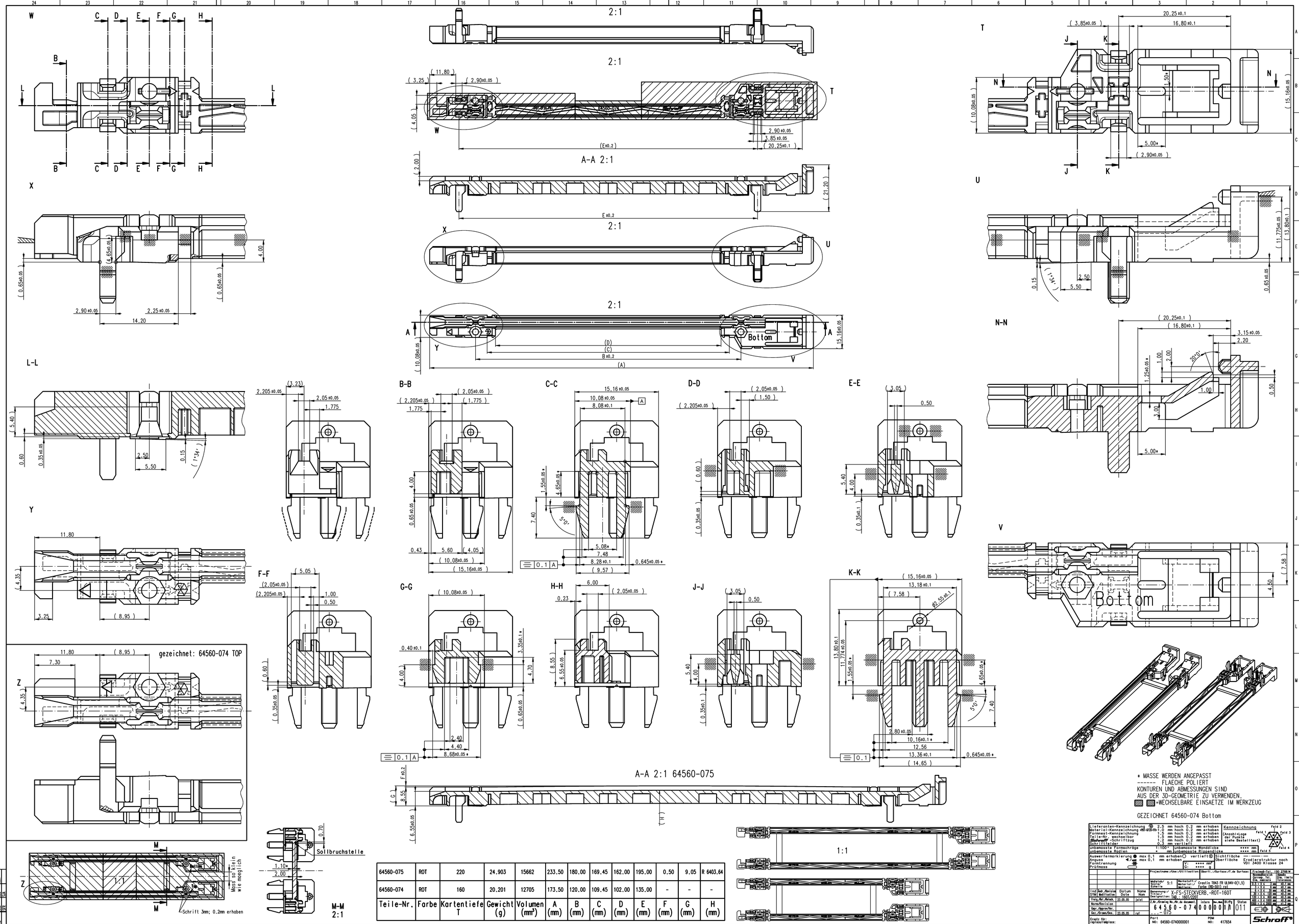

Teile-Nr.	Farbe	Kartentiefe T	Gewicht (g)	Volumen (mm³)	A (mm)	B (mm)	C (mm)	D (mm)	E (mm)	F (mm)	G (mm)	H (mm)
64560-075	ROT	220	24.903	15662	233.50	180.00	169.45	162.00	195.00	0.50	9.05	R 6403.64
64560-074	ROT	160	20.201	12705	173.50	120.00	109.45	102.00	135.00	-	-	-

Copyright Schroff GmbH 06.06.2005

X-ON Electronics

Largest Supplier of Electrical and Electronic Components

Click to view similar products for schroff ***manufacturer:***

Other Similar products are found below :

24566-125 14575271 14576145 14575265 20117-156 20817772 20827088 20846211 20860229 21100777 23130082 24571331 24571586 24572066 26230-374 30825080 20849021 20860240 23001021 24560080 24571303 24572054 24572056 30219-113 20848-410 20838-125 20860-605 10225-602 10225-623 10828058 13100103 13100123 28230-439-C 24563-457 24563-444 20848-601 21101-853 24563-133 24563-134 24564-431 24827-107 24563-142 24563-157 24563-442 A265HC-5.80EH 24561-331 10225640 10225696 16230005 16230007