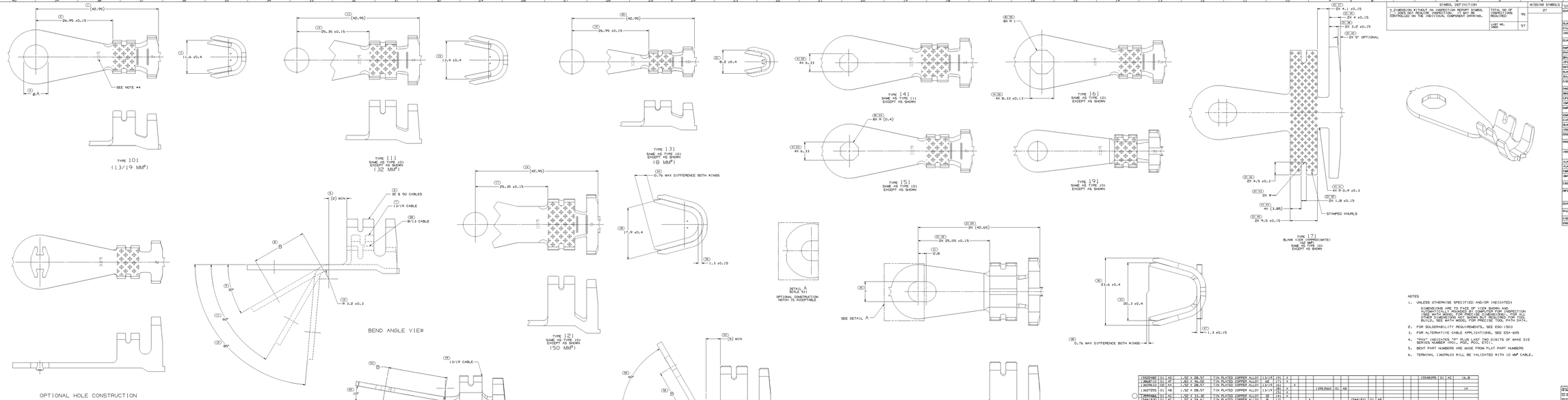
TYPE 101
(13/19 MM²)
TYPE 111
SAME AS TYPE 101
EXCEPT AS SHOWN
(32 MM²)
TYPE 131
SAME AS TYPE 101
EXCEPT AS SHOWN
(18 MM²)
TYPE 141
SAME AS TYPE 111
EXCEPT AS SHOWN
TYPE 161
SAME AS TYPE 101
EXCEPT AS SHOWN
TYPE 151
SAME AS TYPE 101
EXCEPT AS SHOWN
TYPE 191
SAME AS TYPE 101
EXCEPT AS SHOWN
TYPE 121
SAME AS TYPE 101
EXCEPT AS SHOWN
(50 MM²)
TYPE 171
BLANK (TBA APPROXIMATE)
SAME AS TYPE 101
EXCEPT AS SHOWN
OPTIONAL HOLE CONSTRUCTION
BEND ANGLE VIEW
TYPE 181
SAME AS TYPE 151
EXCEPT AS SHOWN
BEND ANGLE VIEW
TYPE 122
SAME AS TYPE 121
EXCEPT AS SHOWN
(50 MM²)
BEND ANGLE VIEW
TYPE 171
SAME AS TYPE 101
EXCEPT AS SHOWN
(62 MM²)
DETAIL A
SCALE 5:1
OPTIONAL CONSTRUCTION
NOTCH IS ACCEPTABLE
SEE NOTE #4
SEE DETAIL A
STAMPED KNURLS
0.76 MAX DIFFERENCE BOTH WINGS
13/19 CABLE
32 & 50 CABLES
(2) MIN
B/13 CABLE
R 3.2 ±0.3
(8) MIN
(2) MIN

| | | |