THIS DRAWING IS UNPUBLISHED. RELEASED FOR PUBLICATION -,- .
© COPYRIGHT 2011 BY TYCO ELECTRONICS CORPORATION. ALL RIGHTS RESERVED.

LOC	DIST
DW	—

REVISIONS

P	LTR	DESCRIPTION	DATE	DWN	APVD
	A	REVISED (ECR-10-026339)	23MAY'11	J.C.	W.K.

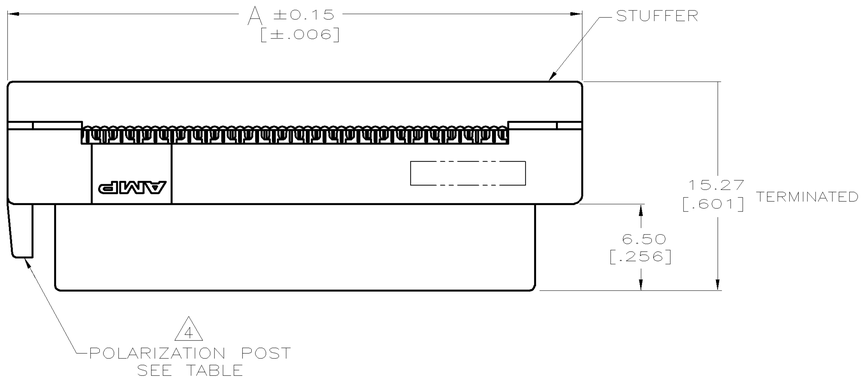

1. HOUSING AND COVER– POLYESTER, BLACK, 94V–0.
2. CONNECTOR WILL TERMINATE .63 [.025] CENTERLINE FLAT RIBBON CABLE, #30 AWG SOLID,PVC INSULATION.
3. DIMENSIONS SHOWN ARE MAXIMUM UNLESS OTHERWISE SPECIFIED.
4. REQUIRED FOR POLARIZATION OF RIBBON CABLE EDGE CONNECTOR TO P.C. BOARD.
5. CONNECTOR WILL ACCOMODATE PRINTED CIRCUIT BOARD THICKNESS OF 1.42–1.72 [.056–.068].
6. ALL P/NS ARE PACKAGED IN TUBES, THEY ARE THE SAME PRODUCT AS 787693–2, –4, –5, –3, –6, –1 RESPECTIVELY, WHICH ARE PACKAGED IN TRAYS.
7. TERMINALS–PHOSPHOR BRONZE WITH GOLD FLASH OVER 0.76μm [.000030] MINIMUM PALLADIUM–NICKEL IN CONTACT AREA AND 3.81μm [.000150] MINIMUM TIN ON TERMINATING AREA, ALL OVER 1.27μm [.000050] MINIMUM NICKEL.
8. LEAD CONTENT: 1000 PPM UNDER.
9. ALL DIMENSIONS SHOWN ARE MAXIMUM UNLESS OTHERWISE SPECIFIED.

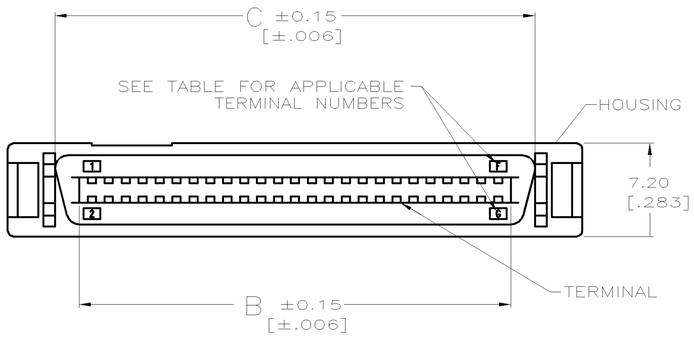

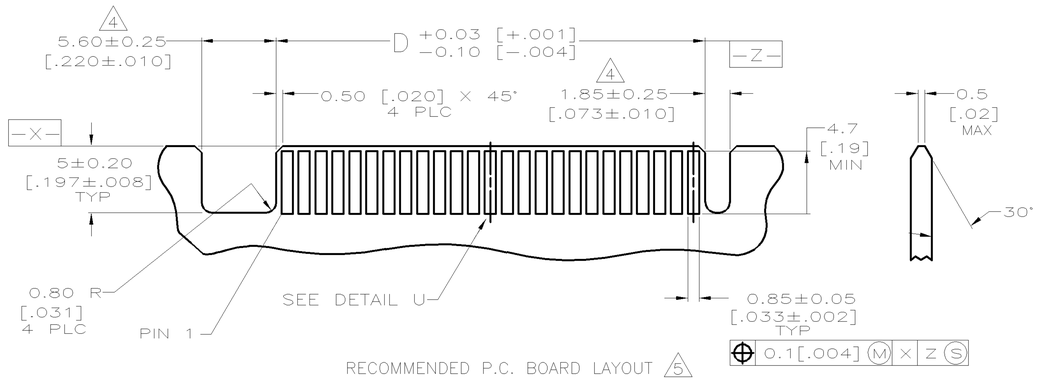

G	F	D	C	B	A	NO OF POSN	PART NUMBER
100	99	63.93 [2.517]	67.77 [2.668]	64.13 [2.525]	74.85 [2.947]	100	1–1734098–0
80	79	51.23 [2.017]	55.07 [2.168]	51.43 [2.025]	62.15 [2.447]	80	1734098–8
68	67	43.61 [1.717]	47.45 [1.868]	43.81 [1.725]	54.53 [2.147]	68	1734098–7
60	59	38.53 [1.517]	42.37 [1.668]	38.73 [1.525]	49.45 [1.947]	60	1734098–6
50	49	32.18 [1.267]	36.02 [1.418]	32.38 [1.275]	43.10 [1.697]	50	1734098–5
40	39	25.70 [1.012]	29.67 [1.168]	26.03 [1.025]	36.75 [1.447]	40	1734098–4

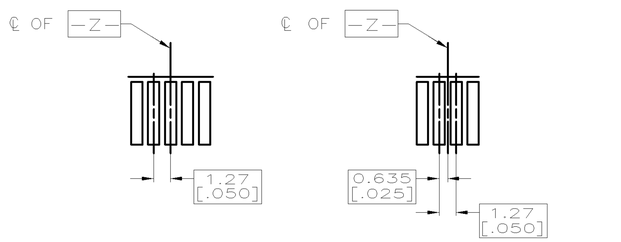

DETAIL U

THIS DRAWING IS A CONTROLLED DOCUMENT.

DIMENSIONS: mm

TOLERANCES UNLESS OTHERWISE SPECIFIED:
0 PLC ±–
1 PLC ±–
2 PLC ±–
3 PLC ±–
4 PLC ±–
ANGLES ±–
9

MATERIAL: SEE NOTE
FINISH: SEE NOTE

DWN O. HU 26MAR2004
CHK S. HOU 26MAR2004
APVD T. KE 26MAR2004
PRODUCT SPEC 108–57896
APPLICATION SPEC —
WEIGHT —

TE Connectivity

NAME: RCPT, ASSY, RIBBON CABLE, .025CL, CHAMP .050, SERIES I

SIZE A3 | CAGE CODE 00779 | DRAWING NO C–1734098 | RESTRICTED TO —

CUSTOMER DRAWING | SCALE — | SHEET 1 OF 2 | REV A

THIS DRAWING IS UNPUBLISHED. RELEASED FOR PUBLICATION -,- .
© COPYRIGHT 2011 BY TYCO ELECTRONICS CORPORATION. ALL RIGHTS RESERVED.

LOC	DIST
DW	—

REVISIONS

P	LTR	DESCRIPTION	DATE	DWN	APVD
		SEE SHEET 1.			

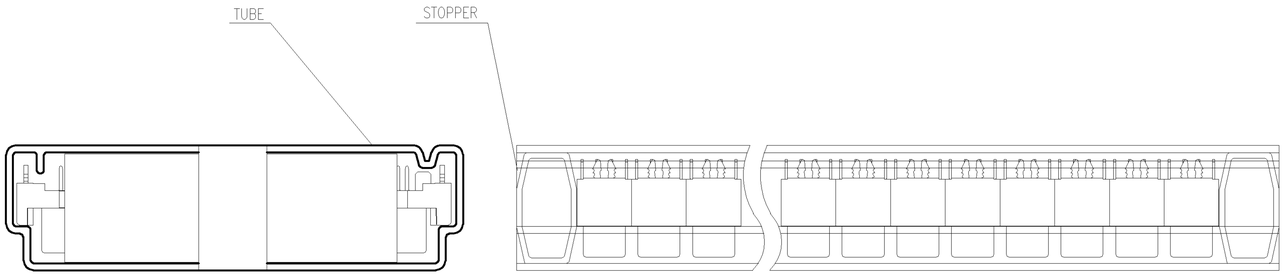

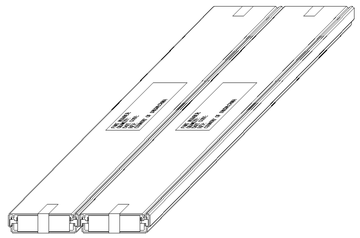

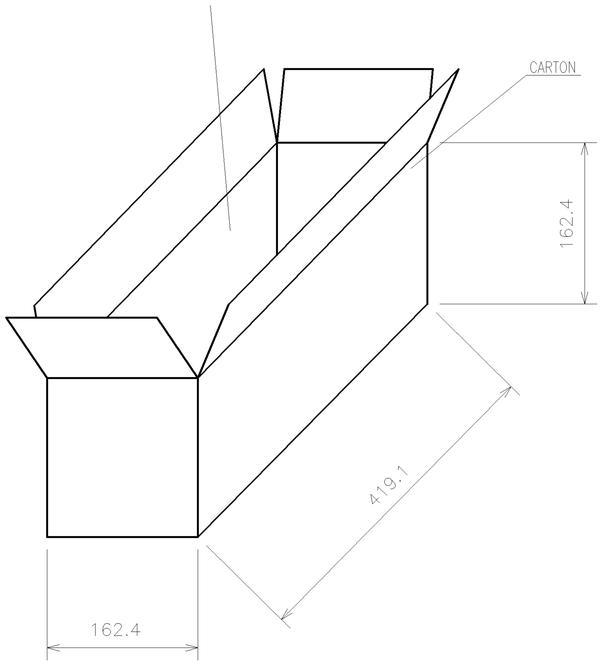

POS.	Q'TY/ TUBE	TUBE/ BOX	Q'TY/ BOX	N/W (KG)	G/W (KG)	PART NUMBER
100	50	6	300	2.67	3.62	1-1734098-0
80	50	12	600	4.44	5.84	1734098-8
68	50	12	600	3.84	5.27	1734098-7
60	50	12	600	3.46	4.72	1734098-6
50	50	12	600	2.94	4.10	1734098-5
40	50	18	900	3.69	5.10	1734098-4

THIS DRAWING IS A CONTROLLED DOCUMENT.

DIMENSIONS: mm

TOLERANCES UNLESS OTHERWISE SPECIFIED:
0 PLC ± –
1 PLC ± –
2 PLC ± –
3 PLC ± –
4 PLC ± –
ANGLES ± –

MATERIAL –

FINISH –

DWN –
CHK –
APVD –
PRODUCT SPEC –
APPLICATION SPEC –
WEIGHT –

TE Connectivity

NAME
RCPT, ASSY, RIBBON CABLE, .025CL, CHAMP .050, SERIES I

SIZE	CAGE CODE	DRAWING NO	RESTRICTED TO
A3	00779	C-1734098	—

CUSTOMER DRAWING

SCALE	SHEET	REV
—	2 OF 2	A

X-ON Electronics

Largest Supplier of Electrical and Electronic Components

Click to view similar products for Headers & Wire Housings ***category:***

Click to view products by TE Connectivity ***manufacturer:***

Other Similar products are found below :

95000-104TRLF 10135584-644402LF DF62W-EP2022PCA 95000-106TRLF DF62W-2022SCA DF62W-EP2022PC 2203348 DF62W-2022SC 1084018 1029039 1084017 802-10-012-10-002000 1112640 1112639 000-34000 0009482033 0009507031 57102-S06-03LF 57202-S52-04LF PCN6-15S-2.5E 0039019024 58102-G61-06LF 582553-1 0009485154 0009508121 0022285053 0050291907 018731A LY20-4P-DT1-P1E-BR 02.125.8002.8 60101931 60598-1 (Cut Strip) M1625-3R/100 61062-3 61082-181009 636-1427 638009-1 641938-9 641991-4 644168-1 647662-1 65039-019ELF 65817-002LF 65817-015LF 65863-015LF 66207-023LF 67016-026LF 67046-001LF 67095-007LF 67230-005LF