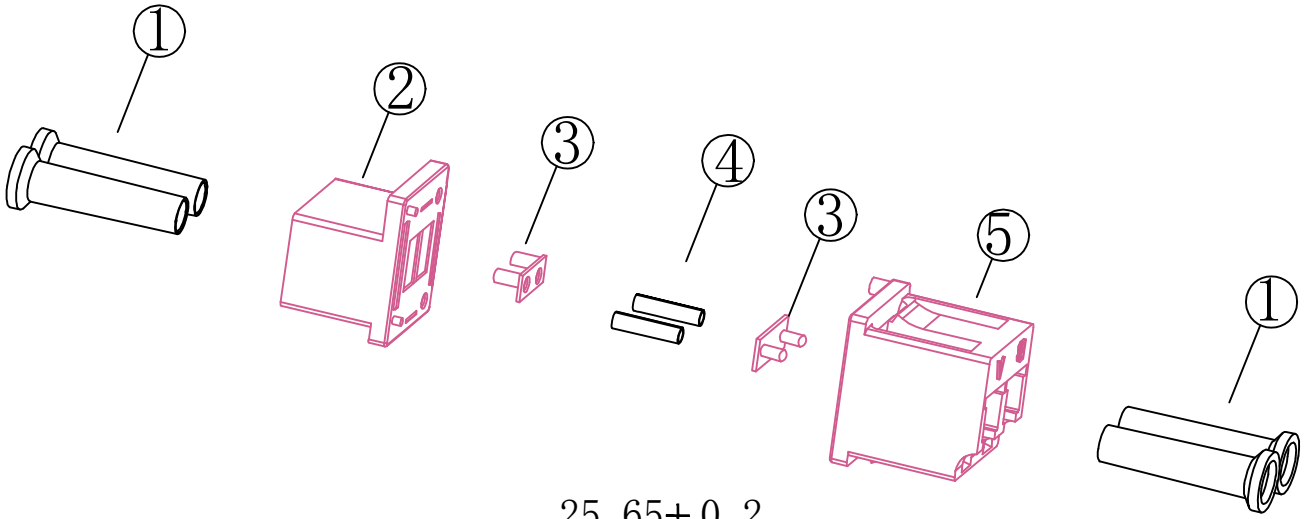

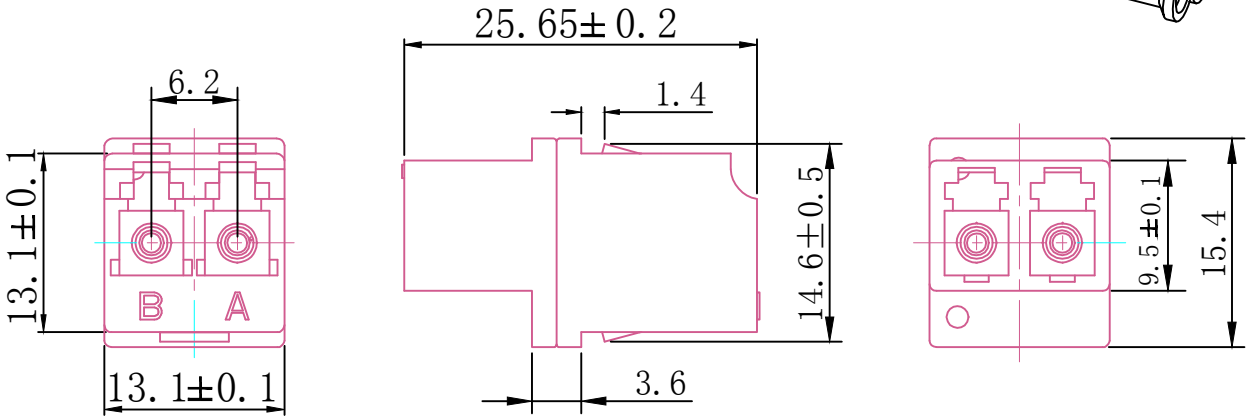

NOTE:
RoHS 2.0 & Reach COMPLIANT

Insertion Loss (typical) (dB)	≤0.12
Insertion Loss(dB)	≤0.30
Operating Temperature(° C)	-40 ~+80
Storage Temperature(° C)	-40 ~+85

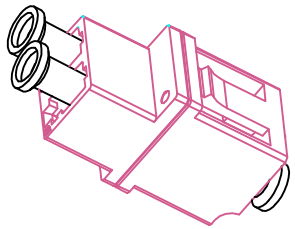

MATERIAL LIST:

NO.	SPECIFICATION STANDARD	QT'Y	REMARK
⑤	LC Erika violett RAL4003 Body RJ45 Footprint	1pcs	
④	LC Sleeve ceramic (Multi-Mode)	1pcs	
③	Erika violett RAL4003 bush	2pcs	
②	LC Erika violett Body RAL4003 SC Simplex Footprint	1pcs	
①	LC White Dust cap	4pcs	

BY	CHK	REVISION RECORD MODIFICATIONS	DATE	REV.	PRODUCT NAME: LC OM4(ceramic)Erika violett Duplex plastic Adapter (RJ45 Footprint)			UNIT: MM
		NEW	2016-12-10	A	DRAWNBY	CHECKBY	APPOBY	DATE
								2016-12-10