Rating	20A 12V DC
Contact Resistance	50m ohm Max.
Insulation Resistance	DC 500V 100M ohm Min.
Dielectric Strength	AC 1500V 1 minute
Operation Temperature	-25°C~85°C
Switch Function	4P DPST ON-OFF(Led Dependent)

Mounting Hole

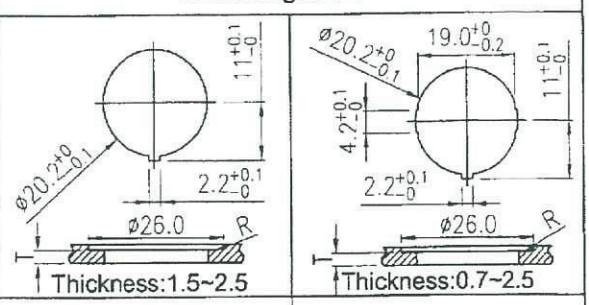

Circuit Diagram

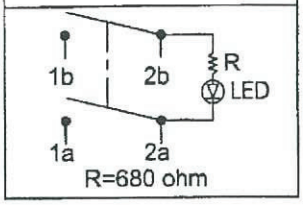

Material:
Frame: Black, Nylon 66
Actuator: Green, PC
Printed: None

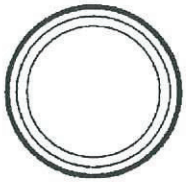

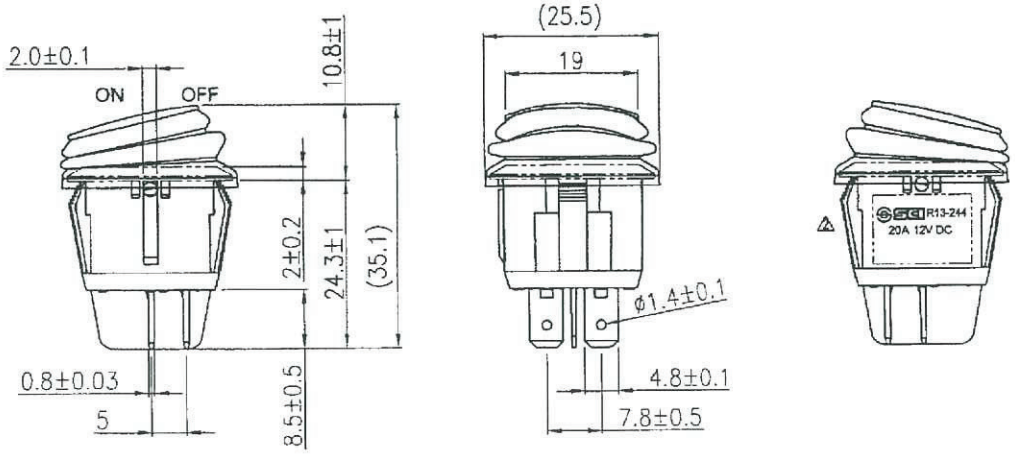

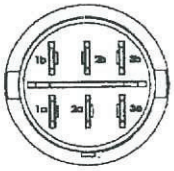

Tolerances ±0.3 Unless Otherwise Specified

Date	Name	Description	No.
9/20/'12	張東	更新本體印刷，加SCI LOGO.	2
6/27/'07	曹盈芳	R13-244A8系列只通過UL，本體取消ENEC,增加T85，重新出圖.	1

Drawn	Checked	Approved	SCI BOM No.	1823925	Model Name	ROCKER SWITCH	
張東	[illegible]	Simon	Customer No.		Model No.	R13-244B8-02	Rev. 2
9/20/'12	9/28-'12	9/28-'12	Unit	mm	Shin Chin Industrial Co., Ltd.		