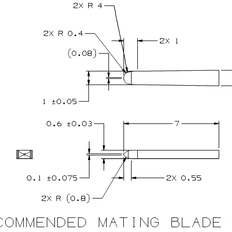

RECOMMENDED MATING BLADE CONFIGURATION

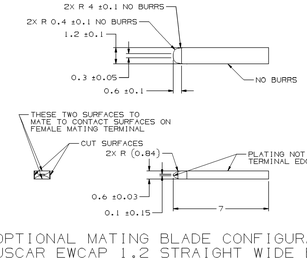

OPTIONAL MATING BLADE CONFIGURATION
USCAR EWCAP 1.2 STRAIGHT WIDE BLADE

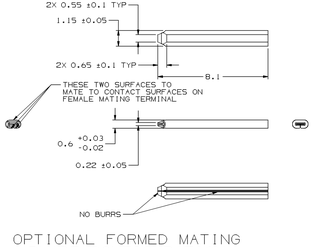

OPTIONAL FORMED MATING
BLADE CONFIGURATION

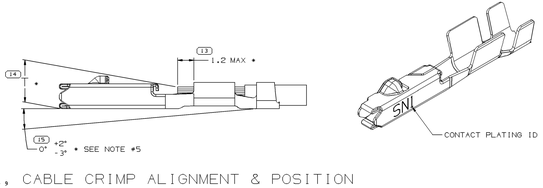

TERMINAL, CABLE CRIMP ALIGNMENT & POSITION

SYMBOL DEFINITION		MISSING SYMBOLS
A DIMENSION WITHOUT AN INSPECTION REPORT SYMBOL (□) DOES NOT REQUIRE INSPECTION. IT MAY BE CONTROLLED ON THE INDIVIDUAL COMPONENT DRAWING.	TOTAL NO OF INSPECTIONS REQUIRED: 19	1 7
	LAST NO. USED: 16	

DWG STATUS DATE	STN	REV	N/P	CHG	ZONE	REVISION HISTORY	AUTH	DR	APVD 1	APVD 2
30APJ3	R	01	-	-	-	TAXI PART DRAWING CREATED(13881789 & 13881789 WIRE ON SHEET 1); ADDED 15542381, 15542382 & 15542382 TO REV 01.	422326	DM	DM	MEC
02JL13	R	02	-	-	-	(15542381) UPDATED PDM ATTRIBUTES; NO REV UPDATE REQ'D(I 33103492-96 ADDED TO REV 01	423153	DM	DM	MEC
02JL13	R	03	-	-	-	(13881789-1789 & 15542381-2382) UPDATED PDM ATTRIBUTES; NO REV UPDATE REQ'D	423154	DM	DM	MEC
17DE13	R	04	-	-	-	(13881789 & 33103493) - CU DIA IN CHART 1.2-1.6 WAS 1.4-1.9.	424934	DL	DL	MEC
07MR14	R	05	-	-	-	33103494 - UPDATED PART AVAILABILITY	425796	KA	KA	MEC
24APJ4	R	06	-	-	-	ALL PARTS - REVISED CRIMP DIMENSIONING NOTE	426369	APB	JAN	MEC
04JN14	R	07	-	-	-	ALL PARTS; ADDED WIND TYPE VIEWS 2 PLCS; NO REV UPDATE REQ'D	426682	DM	DM	MAC
09JN14	R	08	-	-	-	(15542381 & 33103492) UPDATED DIMS B1 & B2 IN CHART; NO REV UPDATE REQ'D	426748	DM	DM	MAC
12JN14	R	09	-	-	-	(15542381, REMOVED PART AVAILABILITY LINE IN CHART & 33103494 ADDED PART AVAILABILITY LINE IN CHART; NO REV UPDATE REQ'D.	426774	DM	DM	MAC
18JN14	R	10	-	-	-	ALL PARTS - ADDED MAXIMUM CURRENT CAPACITY NOTE	426792	APB	JAN	MEC
03SE14	R	11	-	-	-	ALL PARTS - DIM #16 WAS 1.92 MAX WIDTH BETWEEN BOX AND CORE WING, BEFORE & AFTER CRIMP *	427490	ABH	JAN	MEC
08JA15	R	12	-	-	-	(15542381, 15542382 - UPDATED PART AVAILABILITY	428605	APB	JAN	MEC
06JN15	R	13	-	-	-	ALL PARTS - ADDED WING TYPE II VIEW, PLATING TYPE COLUMNS TO CHART, PLATING TYPE, TARNISH, MATING COMPONENTS & PERFORMANCE REQUIREMENT NOTES AND REMOVED AL SIZE & DIA COLUMNS IN CHART	429809	APB	APB	RDL
30JL15	R	14	-	-	-	33103492-96 MOVED TO SHEET 05	430329	APB	APB	RDL

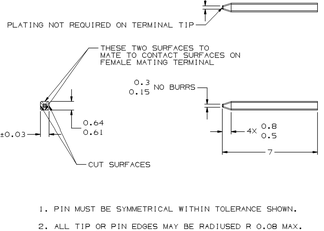

1. PIN MUST BE SYMMETRICAL WITHIN TOLERANCE SHOWN.
2. ALL TIP OR PIN EDGES MAY BE RADIUSED R 0.08 MAX.
3. NO BURRS ON TIP OR PIN EDGES.
4. ALL PIN DIMENSIONS INCLUDE PLATING IF APPLICABLE.

OPTIONAL MATING BLADE
CONFIGURATION 064-T

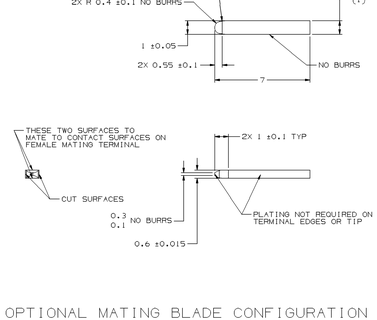

OPTIONAL MATING BLADE CONFIGURATION
USCAR EWCAP 1 STRAIGHT NARROW BLADE

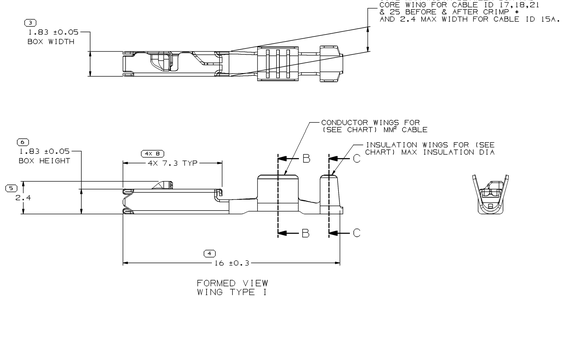

FORMED VIEW
WING TYPE I

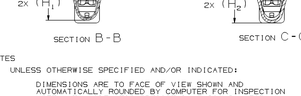

SECTION B-B

SECTION C-C

NOTES

1. UNLESS OTHERWISE SPECIFIED AND/OR INDICATED:

   DIMENSIONS ARE TO FACE OF VIEW SHOWN AND AUTOMATICALLY ROUNDED BY COMPUTER FOR INSPECTION (SEE MATH MODEL FOR PRECISE DIMENSIONS). FOR ALL OTHER DIMENSIONS NOT SHOWN BUT REQUIRED FOR TOOL BUILD, SEE MATH MODEL FOR PRECISE TOOL PATH DATA.

2. RECOMMENDED MATING BLADE THICKNESS 0.61±0.03 MM OR 0.64±0.03 MM
   RECOMMENDED MATING BLADE WIDTH NOT TO EXCEED 1.2 MM AND NO LESS THAN 0.61 MM.
3. CRIMP DIMENSION FROM THE BACK OF THE CORE WING (INCLUDES THE FLARE OUT FROM THE CORE WING) TO THE END OF THE INSULATION WING.

   2.05 MM MAX WIDTH, 2.10 MM MAX HEIGHT FOR CABLE SIZE UP TO 1.9 MM O.D.
   2.35 MM MAX WIDTH, 2.40 MM MAX HEIGHT FOR CABLE SIZE BETWEEN 1.86 TO 2.25 MM O.D.
   2.67 MM MAX WIDTH, 2.67 MM MAX HEIGHT FOR CABLE SIZE BETWEEN 2.25 TO 2.40 MM O.D.
4. * DENOTES DIMENSIONS MADE AT CUT-OFF & CRIMP DIE.
5. PLUS ANGLE IS WING BOTTOM SURFACE ROTATED COUNTERCLOCKWISE AGAINST THE BOX BOTTOM SURFACE.
6. DO NOT PROBE, TEST OR OTHERWISE CONTACT THE INTERIOR REGION (THE SPRING OR ANY MOVING PART) OF THIS TERMINAL. SEVERE DAMAGE CAN OCCUR, COMPROMISING THE PERFORMANCE OF THE ELECTRICAL INTERFACE.
7. MAXIMUM CURRENT CAPACITY AS DEFINED BY USCAR-2 R6 SECTION 5.3.3 IS 16.5 AMPS WITH 1.5mm² COPPER CABLE.
8. PLATING TYPE:

   I. MATTE TIN 1.9 - 7.0 MICROMETERS THICK.

   II. SILVER 1.0 - 2.0 MICROMETERS THICK OVER NICKEL UNDERPLATE 0.13 - 0.51 MICROMETERS THICK.

   III. MATTE TIN 1.9 - 7.0 MICROMETERS THICK OVER NICKEL UNDERPLATE 0.13 - 0.51 MICROMETERS THICK. (FOR USE WITH SELECTIVE SILVER PLATING SPECIFICATION)

   PLATING TYPE INFORMATION SHOWN ABOVE IS REFERENCE ONLY. PLATING REQUIREMENTS ARE CONTAINED IN APPLICABLE MATERIAL SPECIFICATION.

9. REFERENCE MATING COMPONENTS OR EQUIVALENTS:
   TERMINAL 33101340
10. PARTS MEET THE PERFORMANCE REQUIREMENTS OF GMW3191 JUNE2012 AND SAE/USCAR-2 R6 REVISION FOR THE FOLLOWING CLASSIFICATIONS:

   TEMPERATURE CLASS 3 (-40°C TO 125°C)
   VIBRATION CLASS 1 (ON BODY OR CHASSIS)
   SEALING CLASS 1 (UNSEALED) FOR CABLE I.D. 15, 17 & 25
   SEALING CLASS 2 OR 3 (SEALED CONNECTOR DEPENDENT) FOR CABLE I.D. 21 & 18

WING TYPE I

WING TYPE II

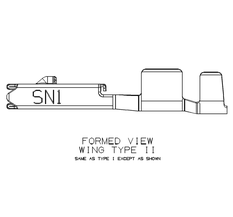

FORMED VIEW
WING TYPE II
SAME AS TYPE I EXCEPT AS SHOWN

PART NO	REV	N/P	MAT'L SIZE	MAT'L SPEC	CONTACT AREA PLATING TYPE (SEE NOTE 8)	CRIMP AREA PLATING TYPE (SEE NOTE 8)	CONTACT PLATING	CONTACT PLATING I.D.	SIZE (MM²)	DIA	ID	WING TYPE	B_1 ±0.2	B_2 ±0.3	(H_1)	(H_2)	T MAX
									COPPER								
15542382	01	AH	0.19 X 26.7B	Cu/Ni/Si1	I	I	TIN	SNI	0.8 - 1.0	1.86 - 2.1	17	I	2.5	2.8	2.7	2.8	1.6
15542381	01	AH	0.19 X 26.7B	Cu/Ni/Si1	I	I	TIN	SNI	0.13 - 0.22	0.81 - 1.2	25	I	1.5	1.5	1.4	1.6	1.0
15542380	01	AG	0.19 X 27.7B	Cu/Ni/Si1	I	I	TIN	SNI	1.25 - 1.5	2.1 - 2.4	15A	II	3.1	3.4	3.1	3.1	1.7
13881789	01	AK	0.19 X 26.7B	Cu/Ni/Si1	I	I	TIN	SNI	0.35 - 0.5	1.2 - 1.6	21	I	2	2.4	2.1	2.4	1.4
13881788	01	AJ	0.19 X 26.7B	Cu/Ni/Si1	I	I	TIN	SNI	0.75 - 0.8	1.7 - 1.9	18	I	2.5	2.5	2.7	2.5	1.5

DRAWING NUMBER	SIZE	SCALE	TWIN NUT SHEET NO	SHEET NO	TOT SHEETS	REV	N/P
13543112	A1x3	101	2 OF 2	4 OF	4	R	14 -

3 PROCESS SENSITIVE DIMENSION

DIMENSIONS ENCLOSED IN ( ) INDICATE REFERENCE DIMENSION, AND NO TOLERANCE LIMITS ARE ESTABLISHED

DIMENSIONAL RANGE (MM)	DRAFT ∠
0 - 3	1°
3 - 12	0.5°
>12	0°

TOLERANCE UNLESS OTHERWISE SPECIFIED

LINEAR	ANGULAR
±0.25	±0.5°

ANGULAR TOLERANCE ±0.5°

THIRD ANGLE PROJECTION

DO NOT SCALE

USE MATH DATA

NX

THIS DRAWING IS THE PROPERTY OF DELPHI CORPORATION AND IS LOANED TO THE RECIPIENT IN CONFIDENCE. THE REPRODUCTION OR DISTRIBUTION OF THIS DOCUMENT OR THE INFORMATION CONTAINED ON IT IS PROHIBITED WITHOUT THE WRITTEN CONSENT OF THE DELPHI CORPORATION. THE RECIPIENT OF THIS DRAWING, BY THE ACCEPTANCE OF THIS DRAWING, AGREES TO THE FOREGOING.

3 - THE ORDER/SUPPLIER'S PART NUMBER INDICATES THAT PHYSICAL PARTS ARE NOT AVAILABLE FOR ORDERING.	
PART NUMBERS THAT DO NOT HAVE A LINE PRESENT INDICATE THAT PHYSICAL PARTS ARE AVAILABLE FOR ORDERING.	
CONTACT DELPHI SALES TO ASSURE AVAILABILITY OF PARTS.	
DWG TYPE	PART DRAWING
STYLE	
VOLUME CONT	SYSTEM CODE

UNLESS OTHERWISE SPECIFIED

THIS DOCUMENT IS IN ACCORDANCE WITH ASME Y14.5M-1994 AS INTERPRETED BY THE DELPHI STANDARDIZING THE DIMENSIONS, TOLERANCES, AND DEFINITIONS OF FEATURES AS DEFINED BEFORE/AFTER PROJECTION OF SYSTEM REFERENCE.

ALL DIMENSIONS ARE IN MILLIMETERS

REFERENCE

	DATE
DR	
APVDR C.MARGRAVE	30APJ3
APVDR C.MARGRAVE	30APJ3
APVDR MIKE COONAY	13MEJ3
APVDR	
APVDR	

SUBSTANCES OF CONCERN AND RECYCLED CONTENT PER DELPHI (29P600)

MATERIAL
SEE CHART

DELPHI

DELPHI PACKARD ELECTRICAL/ELECTRONIC ARCHITECTURE
WARREN, OH

COPYRIGHT 2013 DELPHI CORPORATION, HELM OR ITS AFFILIATES. ALL RIGHTS RESERVED.

THIS DRAWING IS THE PROPERTY OF DELPHI CORPORATION AND IS LOANED TO THE RECIPIENT IN CONFIDENCE. THE REPRODUCTION OR DISTRIBUTION OF THIS DOCUMENT OR THE INFORMATION CONTAINED ON IT IS PROHIBITED WITHOUT THE WRITTEN CONSENT OF THE DELPHI CORPORATION. THE RECIPIENT OF THIS DRAWING, BY THE ACCEPTANCE OF THIS DRAWING, AGREES TO THE FOREGOING.

DRAWING NAME
TAXI TERM F OCS 1.2

DRAWING NUMBER	SIZE	SCALE	TWIN NUT SHEET NO	SHEET NO	TOT SHEETS	REV	N/P
13543112	A1x3	101	2 OF 2	4 OF	4	R	14 -

13543112

X-ON Electronics

Largest Supplier of Electrical and Electronic Components

Click to view similar products for Automotive Connectors ***category:***

Click to view products by Delphi ***manufacturer:***

Other Similar products are found below :

003-018-000 600858 60403001 60993906-B 60993913-B 629515004020001 M902-2131 M902-2161 M902-2344 72.330.1035.1 73.353.4028.0 F118010 F119300-B F132210 F132210-B F166900 F180100 F258300 F258300-B F294300-B F339100 F339700 F358300-B F374110 F407400 F412210 F427600 F444110 F487000 F495100-B F500900-B F509500B-B 770444-1 776880-1 827153-1 881735-1 8N1515-32-24P 9-1326727-8 9-1326729-8 925467-1 925474-1 928905-1 936398-2 964562-1 964562-4 964731-2 965051-1 968782-1 GT17SA-8DS-HU GT17VS-10DP-5.2CF