SYMBOL DEFINITION		
A DIMENSION WITHOUT AN INSPECTION REPORT SYMBOL DOES NOT REQUIRE INSPECTION. IT MAY BE CONTROLLED ON THE INDIVIDUAL COMPONENT DRAWING.	TOTAL NO OF INSPECTIONS REQUIRED	13
	LAST NO. USED	13

MISSING SYMBOLS
NO MISSING SYMBOL NUMBER

DWG STATUS					ZONE	REVISION HISTORY	AUTH	DR	APVD	APVD
DATE	SIZE	REV	APP	CHG						
30DE16	R	01	-	-	-	KIT DRAWING CREATED	A35277	BER	ANY	WEI

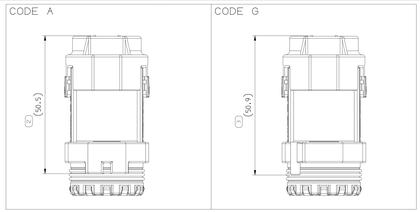

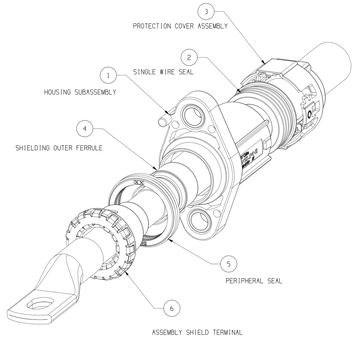

PRINTING DEFINITION

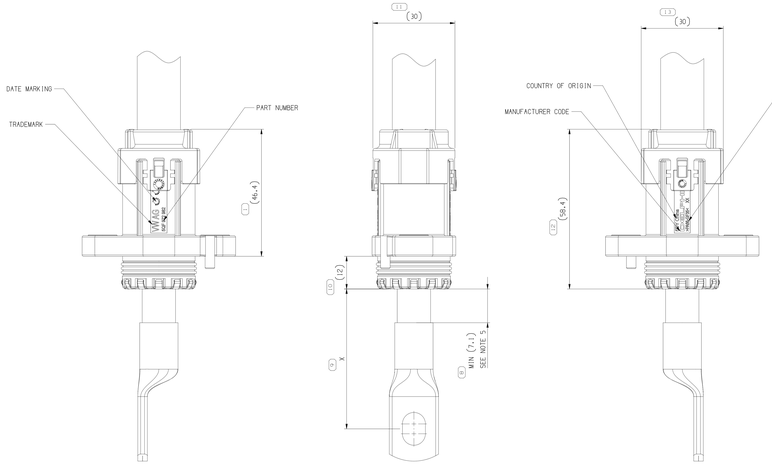

ASSEMBLED VIEWS

1. PARTS ARE NOT AVAILABLE FULLY ASSEMBLED AS SHOWN. FINAL ASSEMBLY REQUIRES INDIVIDUAL COMPONENTS OR SUB-ASSEMBLY LISTED IN THE PART LIST AND AVAILABLE SEPERATELY FROM DELPHI
2. X: LENGTH FOR ASSEMBLY PROCESS AT HARNESS MAKER
3. INDICATION OF WEIGHTS ONLY FOR INFORMATION,NOT FOR EVALUATION
4. ONLY APPROVED CABLE SUPPLIERS. ALL OTHER CABLE SUPPLIERS / CABLE SIZES MUST BE VALIDATED.
5. MINIMUM CLEARANCE AND CREEPAGE DISTANCES MUST BE CHOSEN ACC. DIN EN 60664-1.01/2008 AND IS IN THE RESPONSIBILITY OF THE USER.
6. J5022901 AND 33349598 IS UNASSEMBLED FOR SHIPPING

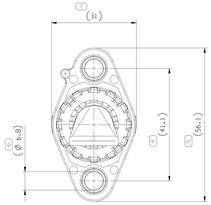

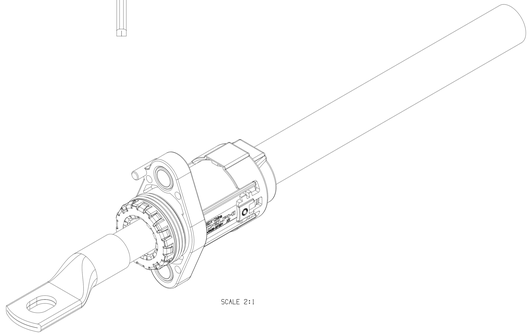

SCALE 2:1

ITEM	DELPHI PN	DESCRIPTION	QUANTITY				
1	33340524	HOUSING SUBASSEMBLY CODE A	1	1	-	1	1
	35011751	HOUSING SUBASSEMBLY CODE G	-	-	1	-	-
2	33340534	SINGLE WIRE SEAL FOR 50mm² CABLE	1	-	-	-	-
	33340535	SINGLE WIRE SEAL FOR 35mm² CABLE	-	1	1	-	-
	33340536	SINGLE WIRE SEAL FOR 25mm² CABLE	-	-	-	1	-
	33340537	SINGLE WIRE SEAL FOR 16mm² CABLE	-	-	-	-	1
3	33340539	PROTECTION COVER ASSEMBLY FOR 50mm² CABLE	1	-	-	-	-
	33340540	PROTECTION COVER ASSEMBLY FOR 35mm² CABLE	-	1	-	-	-
	35037731	PROTECTION COVER ASSEMBLY FOR 35mm² CABLE	-	-	1	-	-
	33340541	PROTECTION COVER ASSEMBLY FOR 25mm² CABLE	-	-	-	1	-
	33340542	PROTECTION COVER ASSEMBLY FOR 16mm² CABLE	-	-	-	-	1
4	33340551	SHIELDING OUTER FERRULE FOR 50mm² CABLE	1	-	-	-	-
	33340552	SHIELDING OUTER FERRULE FOR 35mm² CABLE	-	1	1	-	-
	33340553	SHIELDING OUTER FERRULE FOR 25mm² CABLE	-	-	-	1	-
	33340554	SHIELDING OUTER FERRULE FOR 16mm² CABLE	-	-	-	-	1
5	33340532	PERIPHERAL SEAL	1	1	1	1	1
6	33346986	ASSEMBLY SHIELD TERMINAL	1	1	1	1	1
CUSTOMER INFO.	VW	PART NUMBER	-	-	5QF 972 982	-	-
	NATURAL	PART NUMBER	33349598	33350175	35025794	33350176	33350177
		DESCRIPTION	FOR 50mm² CABLE CODE A	FOR 35mm² CABLE CODE A	FOR 35mm² CABLE CODE G	FOR 25mm² CABLE CODE A	FOR 16mm² CABLE CODE A

PRELIMINARY DRAWING

DRAWING NUMBER						
33376479						
SIZE	SCALE	FRAME NO	SHEET NO	SHEET TOT	REV	NUM
A1x3	2:1	2 OF 2	1 OF 1	R	01	-

A "\" LINE DRAWN THROUGH A PART NUMBER INDICATES THAT PHYSICAL PARTS ARE NOT AVAILABLE FOR ORDERING.
PART NUMBERS THAT DO NOT HAVE A LINE PRESENT INDICATE PHYSICAL PARTS ARE AVAILABLE FOR ORDERING.
CONTACT DELPHI SALES TO ASSURE AVAILABILITY OF PARTS.

DWG TYPE	
CUSTOMER PART DRAWING	
STYLE	
VOLUME (CM³)	SYSTEM CODE

UNLESS OTHERWISE SPECIFIED
THIS DOCUMENT IS IN ACCORDANCE WITH ASME Y14.5M-1994 UNLESS OTHERWISE SPECIFIED. GENERAL DIMENSIONAL TOLERANCES MAXIMUM COST. SEPARATE PATTERNS OF FEATURES MAY BE GAGED SEPARATELY REGARDLESS OF DATUM REFERENCES.

ALL DIMENSIONS ARE IN MILLIMETERS

REFERENCE

THIRD ANGLE PROJECTION | DO NOT SCALE | USE MATH DATA | NX

DELPHI
DELPHI PACKARD ELECTRICAL/ELECTRONIC ARCHITECTURE
Shanghai, CHINA
COPYRIGHT 2016 DELPHI CORPORATION AND/OR ITS AFFILIATES. ALL RIGHTS RESERVED.
THIS DRAWING IS THE PROPERTY OF DELPHI CORPORATION AND/OR ITS AFFILIATES. ALL RIGHTS INCLUDING THE REPRODUCTION, DISTRIBUTION AND UTILIZATION OF THIS DOCUMENT AND THE SUBJECT MATTER THEREOF AS WELL AS COMMUNICATION OF ANY CONTENT TO OTHERS, WITHOUT EXPRESS AUTHORIZATION, IS PROHIBITED.

DR	S. BERLIN ANAND	30DE16
APVD1	S. BERLIN ANAND	30DE16
APVD2	ZHANG ANYANG	30DE16
APVD3	JIANG WEIGUO	30DE16
APVD4		
APVD5		

SUBSTANCES OF CONCERN AND RECYCLED CONTENT PER DELPHI [394700]

MATERIAL:

DRAWING NAME
AK PASS THROUGH 1WAY
HV CLASS 4

DRAWING NUMBER						
33376479						
SIZE	SCALE	FRAME NO	SHEET NO	SHEET TOT	REV	NUM
A1x3	2:1	1 OF 2	1 OF 1	R	01	-

33376479

X-ON Electronics

Largest Supplier of Electrical and Electronic Components

Click to view similar products for Automotive Connectors ***category:***

Click to view products by Delphi ***manufacturer:***

Other Similar products are found below :

003-018-000 600858 60403001 60993906-B 60993913-B 629515004020001 M902-2131 M902-2161 M902-2344 72.330.1035.1 73.353.4028.0 F118010 F119300-B F132210 F132210-B F166900 F180100 F258300 F258300-B F294300-B F339100 F339700 F358300-B F374110 F407400 F412210 F427600 F444110 F487000 F495100-B F500900-B F509500B-B 770444-1 776880-1 827153-1 881735-1 8N1515-32-24P 9-1326727-8 9-1326729-8 925467-1 925474-1 928905-1 936398-2 964562-1 964562-4 964731-2 965051-1 968782-1 GT17SA-8DS-HU GT17VS-10DP-5.2CF