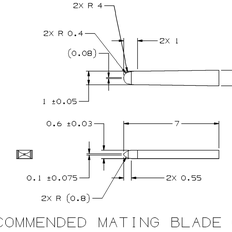


RECOMMENDED MATING BLADE CONFIGURATION

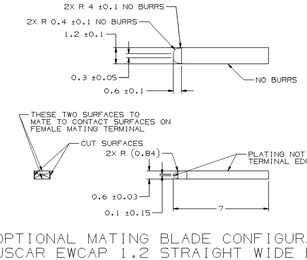


OPTIONAL MATING BLADE CONFIGURATION
USCAR EWCAP 1.2 STRAIGHT WIDE BLADE

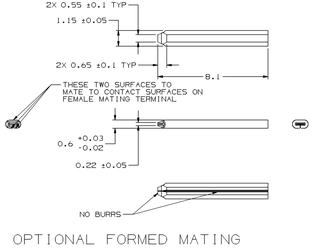


OPTIONAL FORMED MATING
BLADE CONFIGURATION

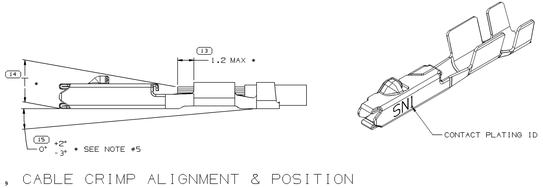


TERMINAL, CABLE CRIMP ALIGNMENT & POSITION

| SYMBOL DEFINITION | | MISSING SYMBOLS |
|---|---|---|
| A DIMENSION WITHOUT AN INSPECTION REPORT SYMBOL (□) DOES NOT REQUIRE INSPECTION. IT MAY BE CONTROLLED ON THE INDIVIDUAL COMPONENT DRAWING. | TOTAL NO OF INSPECTIONS REQUIRED: 19 | 1 7 |
| | LAST NO. USED: 16 | |

| DWG STATUS DATE | STN | REV | N/P | CHG | ZONE | REVISION HISTORY | AUTH | DR | APVD 1 | APVD 2 |
|---|---|---|---|---|---|---|---|---|---|---|
| 30APJ3 | R | 01 | - | - | - | TAXI PART DRAWING CREATED( 13881789 & 13881789 WIRE ON SHEET 1); ADDED 15542381, 15542382 & 15542382 TO REV 01. | 422326 | DM | DM | MEC |
| 02JL13 | R | 02 | - | - | - | (15542381) UPDATED PDM ATTRIBUTES; NO REV UPDATE REQ'D(I 33103492-96 ADDED TO REV 01 | 423153 | DM | DM | MEC |
| 02JL13 | R | 03 | - | - | - | (13881789-1789 & 15542381-2382) UPDATED PDM ATTRIBUTES; NO REV UPDATE REQ'D | 423154 | DM | DM | MEC |
| 17DE13 | R | 04 | - | - | - | (13881789 & 33103493) - CU DIA IN CHART 1.2-1.6 WAS 1.4-1.9. | 424934 | DL | DL | MEC |
| 07MR14 | R | 05 | - | - | - | 33103494 - UPDATED PART AVAILABILITY | 425796 | KA | KA | MEC |
| 24APJ4 | R | 06 | - | - | - | ALL PARTS - REVISED CRIMP DIMENSIONING NOTE | 426369 | APB | JAN | MEC |
| 04JN14 | R | 07 | - | - | - | ALL PARTS; ADDED WIND TYPE VIEWS 2 PLCS; NO REV UPDATE REQ'D | 426682 | DM | DM | MAC |
| 09JN14 | R | 08 | - | - | - | (15542381 & 33103492) UPDATED DIMS B1 & B2 IN CHART; NO REV UPDATE REQ'D | 426748 | DM | DM | MAC |
| 12JN14 | R | 09 | - | - | - | (15542381, REMOVED PART AVAILABILITY LINE IN CHART & 33103494 ADDED PART AVAILABILITY LINE IN CHART; NO REV UPDATE REQ'D. | 426774 | DM | DM | MAC |
| 18JN14 | R | 10 | - | - | - | ALL PARTS - ADDED MAXIMUM CURRENT CAPACITY NOTE | 426792 | APB | JAN | MEC |
| 03SE14 | R | 11 | - | - | - | ALL PARTS - DIM #16 WAS 1.92 MAX WIDTH BETWEEN BOX AND CORE WING, BEFORE & AFTER CRIMP * | 427490 | ABH | JAN | MEC |
| 08JA15 | R | 12 | - | - | - | (15542381, 15542382 - UPDATED PART AVAILABILITY | 428605 | APB | JAN | MEC |
| 06JN15 | R | 13 | - | - | - | ALL PARTS - ADDED WING TYPE II VIEW, PLATING TYPE COLUMNS TO CHART, PLATING TYPE, TARNISH, MATING COMPONENTS & PERFORMANCE REQUIREMENT NOTES AND REMOVED AL SIZE & DIA COLUMNS IN CHART | 429809 | APB | APB | RDL |
| 30JL15 | R | 14 | - | - | - | 33103492-96 MOVED TO SHEET 05 | 430329 | APB | APB | RDL |

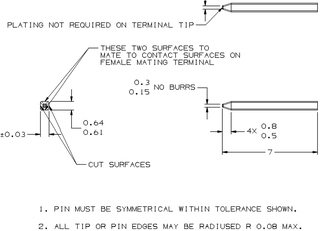


1. PIN MUST BE SYMMETRICAL WITHIN TOLERANCE SHOWN.
2. ALL TIP OR PIN EDGES MAY BE RADIUSED R 0.08 MAX.
3. NO BURRS ON TIP OR PIN EDGES.
4. ALL PIN DIMENSIONS INCLUDE PLATING IF APPLICABLE.

OPTIONAL MATING BLADE
CONFIGURATION 064-T

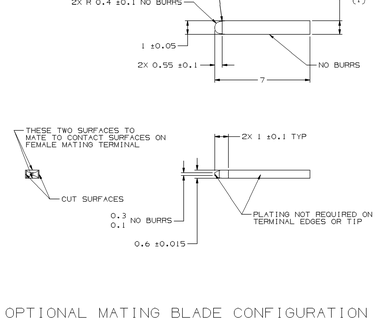


OPTIONAL MATING BLADE CONFIGURATION
USCAR EWCAP 1 STRAIGHT NARROW BLADE

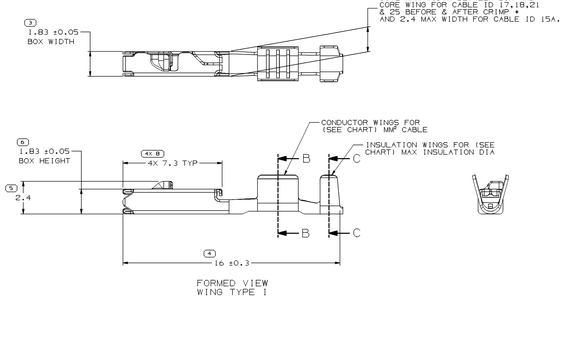


FORMED VIEW
WING TYPE I

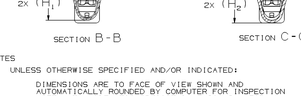


SECTION B-B

SECTION C-C

NOTES

1. UNLESS OTHERWISE SPECIFIED AND/OR INDICATED:

   DIMENSIONS ARE TO FACE OF VIEW SHOWN AND AUTOMATICALLY ROUNDED BY COMPUTER FOR INSPECTION (SEE MATH MODEL FOR PRECISE DIMENSIONS). FOR ALL OTHER DIMENSIONS NOT SHOWN BUT REQUIRED FOR TOOL BUILD, SEE MATH MODEL FOR PRECISE TOOL PATH DATA.

2. RECOMMENDED MATING BLADE THICKNESS 0.61±0.03 MM OR 0.64±0.03 MM
   RECOMMENDED MATING BLADE WIDTH NOT TO EXCEED 1.2 MM AND NO LESS THAN 0.61 MM.
3. CRIMP DIMENSION FROM THE BACK OF THE CORE WING (INCLUDES THE FLARE OUT FROM THE CORE WING) TO THE END OF THE INSULATION WING.

   2.05 MM MAX WIDTH, 2.10 MM MAX HEIGHT FOR CABLE SIZE UP TO 1.9 MM O.D.
   2.35 MM MAX WIDTH, 2.40 MM MAX HEIGHT FOR CABLE SIZE BETWEEN 1.86 TO 2.25 MM O.D.
   2.67 MM MAX WIDTH, 2.67 MM MAX HEIGHT FOR CABLE SIZE BETWEEN 2.25 TO 2.40 MM O.D.
4. * DENOTES DIMENSIONS MADE AT CUT-OFF & CRIMP DIE.
5. PLUS ANGLE IS WING BOTTOM SURFACE ROTATED COUNTERCLOCKWISE AGAINST THE BOX BOTTOM SURFACE.
6. DO NOT PROBE, TEST OR OTHERWISE CONTACT THE INTERIOR REGION (THE SPRING OR ANY MOVING PART) OF THIS TERMINAL. SEVERE DAMAGE CAN OCCUR, COMPROMISING THE PERFORMANCE OF THE ELECTRICAL INTERFACE.
7. MAXIMUM CURRENT CAPACITY AS DEFINED BY USCAR-2 R6 SECTION 5.3.3 IS 16.5 AMPS WITH 1.5mm² COPPER CABLE.
8. PLATING TYPE:

   I. MATTE TIN 1.9 - 7.0 MICROMETERS THICK.

   II. SILVER 1.0 - 2.0 MICROMETERS THICK OVER NICKEL UNDERPLATE 0.13 - 0.51 MICROMETERS THICK.

   III. MATTE TIN 1.9 - 7.0 MICROMETERS THICK OVER NICKEL UNDERPLATE 0.13 - 0.51 MICROMETERS THICK. (FOR USE WITH SELECTIVE SILVER PLATING SPECIFICATION)

   PLATING TYPE INFORMATION SHOWN ABOVE IS REFERENCE ONLY. PLATING REQUIREMENTS ARE CONTAINED IN APPLICABLE MATERIAL SPECIFICATION.

9. REFERENCE MATING COMPONENTS OR EQUIVALENTS:
   TERMINAL 33101340
10. PARTS MEET THE PERFORMANCE REQUIREMENTS OF GMW3191 JUNE2012 AND SAE/USCAR-2 R6 REVISION FOR THE FOLLOWING CLASSIFICATIONS:

   TEMPERATURE CLASS 3 (-40°C TO 125°C)
   VIBRATION CLASS 1 (ON BODY OR CHASSIS)
   SEALING CLASS 1 (UNSEALED) FOR CABLE I.D. 15, 17 & 25
   SEALING CLASS 2 OR 3 (SEALED CONNECTOR DEPENDENT) FOR CABLE I.D. 21 & 18

WING TYPE I

WING TYPE II

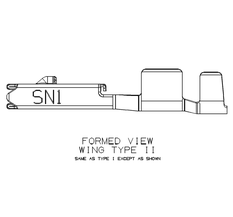


FORMED VIEW
WING TYPE II
SAME AS TYPE I EXCEPT AS SHOWN

| PART NO | REV | N/P | MAT'L SIZE | MAT'L SPEC | CONTACT AREA PLATING TYPE (SEE NOTE 8) | CRIMP AREA PLATING TYPE (SEE NOTE 8) | CONTACT PLATING | CONTACT PLATING I.D. | SIZE (MM²) | DIA | ID | WING TYPE | $B_1$ ±0.2 | $B_2$ ±0.3 | $(H_1)$ | $(H_2)$ | T MAX |
|---|---|---|---|---|---|---|---|---|---|---|---|---|---|---|---|---|---|
| | | | | | | | | | COPPER | | | | | | | | |
| 15542382 | 01 | AH | 0.19 X 26.7B | Cu/Ni/Si1 | I | I | TIN | SNI | 0.8 - 1.0 | 1.86 - 2.1 | 17 | I | 2.5 | 2.8 | 2.7 | 2.8 | 1.6 |
| 15542381 | 01 | AH | 0.19 X 26.7B | Cu/Ni/Si1 | I | I | TIN | SNI | 0.13 - 0.22 | 0.81 - 1.2 | 25 | I | 1.5 | 1.5 | 1.4 | 1.6 | 1.0 |
| 15542380 | 01 | AG | 0.19 X 27.7B | Cu/Ni/Si1 | I | I | TIN | SNI | 1.25 - 1.5 | 2.1 - 2.4 | 15A | II | 3.1 | 3.4 | 3.1 | 3.1 | 1.7 |
| 13881789 | 01 | AK | 0.19 X 26.7B | Cu/Ni/Si1 | I | I | TIN | SNI | 0.35 - 0.5 | 1.2 - 1.6 | 21 | I | 2 | 2.4 | 2.1 | 2.4 | 1.4 |
| 13881788 | 01 | AJ | 0.19 X 26.7B | Cu/Ni/Si1 | I | I | TIN | SNI | 0.75 - 0.8 | 1.7 - 1.9 | 18 | I | 2.5 | 2.5 | 2.7 | 2.5 | 1.5 |

| DRAWING NUMBER | SIZE | SCALE | TWIN NUT SHEET NO | SHEET NO | TOT SHEETS | REV | N/P |
|---|---|---|---|---|---|---|---|
| 13543112 | A1x3 | 101 | 2 OF 2 | 4 OF | 4 | R | 14 - |

3 PROCESS SENSITIVE DIMENSION

DIMENSIONS ENCLOSED IN ( ) INDICATE REFERENCE DIMENSION, AND NO TOLERANCE LIMITS ARE ESTABLISHED

| DIMENSIONAL RANGE (MM) | DRAFT ∠ |
|---|---|
| 0 - 3 | 1° |
| 3 - 12 | 0.5° |
| >12 | 0° |

TOLERANCE UNLESS OTHERWISE SPECIFIED

| LINEAR | ANGULAR |
|---|---|
| ±0.25 | ±0.5° |

ANGULAR TOLERANCE ±0.5°

THIRD ANGLE PROJECTION

DO NOT SCALE

USE MATH DATA

NX

THIS DRAWING IS THE PROPERTY OF DELPHI CORPORATION AND IS LOANED TO THE RECIPIENT IN CONFIDENCE. THE REPRODUCTION OR DISTRIBUTION OF THIS DOCUMENT OR THE INFORMATION CONTAINED ON IT IS PROHIBITED WITHOUT THE WRITTEN CONSENT OF THE DELPHI CORPORATION. THE RECIPIENT OF THIS DRAWING, BY THE ACCEPTANCE OF THIS DRAWING, AGREES TO THE FOREGOING.

| | |
|---|---|
| 3 - THE ORDER/SUPPLIER'S PART NUMBER INDICATES THAT PHYSICAL PARTS ARE NOT AVAILABLE FOR ORDERING. | |
| PART NUMBERS THAT DO NOT HAVE A LINE PRESENT INDICATE THAT PHYSICAL PARTS ARE AVAILABLE FOR ORDERING. | |
| CONTACT DELPHI SALES TO ASSURE AVAILABILITY OF PARTS. | |
| DWG TYPE | PART DRAWING |
| STYLE | |
| VOLUME CONT | SYSTEM CODE |

UNLESS OTHERWISE SPECIFIED

THIS DOCUMENT IS IN ACCORDANCE WITH ASME Y14.5M-1994 AS INTERPRETED BY THE DELPHI STANDARDIZING THE DIMENSIONS, TOLERANCES, AND DEFINITIONS OF FEATURES AS DEFINED BEFORE/AFTER PROJECTION OF SYSTEM REFERENCE.

ALL DIMENSIONS ARE IN MILLIMETERS

REFERENCE

| | DATE |
|---|---|
| DR | |
| APVDR C.MARGRAVE | 30APJ3 |
| APVDR C.MARGRAVE | 30APJ3 |
| APVDR MIKE COONAY | 13MEJ3 |
| APVDR | |
| APVDR | |

SUBSTANCES OF CONCERN AND RECYCLED CONTENT PER DELPHI (29P600)

MATERIAL
SEE CHART

DELPHI

DELPHI PACKARD ELECTRICAL/ELECTRONIC ARCHITECTURE
WARREN, OH

COPYRIGHT 2013 DELPHI CORPORATION, HELM OR ITS AFFILIATES. ALL RIGHTS RESERVED.

THIS DRAWING IS THE PROPERTY OF DELPHI CORPORATION AND IS LOANED TO THE RECIPIENT IN CONFIDENCE. THE REPRODUCTION OR DISTRIBUTION OF THIS DOCUMENT OR THE INFORMATION CONTAINED ON IT IS PROHIBITED WITHOUT THE WRITTEN CONSENT OF THE DELPHI CORPORATION. THE RECIPIENT OF THIS DRAWING, BY THE ACCEPTANCE OF THIS DRAWING, AGREES TO THE FOREGOING.

DRAWING NAME
TAXI TERM F OCS 1.2

| DRAWING NUMBER | SIZE | SCALE | TWIN NUT SHEET NO | SHEET NO | TOT SHEETS | REV | N/P |
|---|---|---|---|---|---|---|---|
| 13543112 | A1x3 | 101 | 2 OF 2 | 4 OF | 4 | R | 14 - |

13543112