3M™ FOUR-WALL HEADER, 2500 SERIES

.100" X .100" LOW PROFILE, SURFACE MOUNT, STRAIGHT AND RIGHT ANGLE THROUGH-HOLE

* LOW PROFILE, SPACE SAVING DESIGN.
* CENTER SLOT POLARIZATION PREVENTS MIS-INSERTIONS AND REDUCES INSERTION TIME.
* DUAL SLOT POLARIZATION MEANS BROADER COMPATIBILITY WITH COMPETITIVE POLARIZATION DESIGNS (NOT AVAILABLE ON 6, 8 OR 10 POSITIONS).
* OPTIONAL RETAINER CLIP FOR LOCKING SOCKETS IN PLACE AND INCREASING CONNECTION RELIABILITY IN VIBRATION-PRONE ENVIRONMENTS.
* HIGH TEMPERATURE INSULATOR SUITABLE FOR "NO LEAD" SOLDERING OPERATIONS.
* THROUGH HOLE VERSION SUITABLE FOR REFLOW SOLDERING USING "PASTE IN HOLE" TECHNIQUES.
* EXPOSED SOLDER TAILS (ON RIGHT ANGLE VERSION) PROVIDE EASE OF CLEANING AND REDUCED REPAIR COST.
* STRAIGHT SURFACE MOUNT VERSION AVAILABLE.

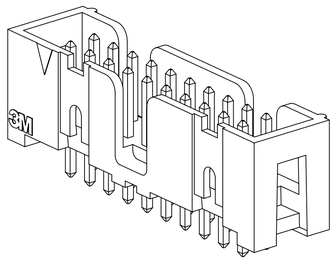

25XX-60XX

STRAIGHT VERSION

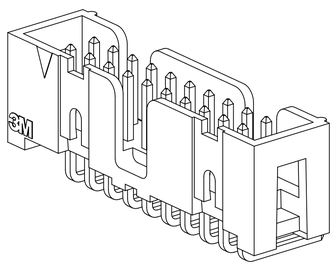

25XX-50XX

RIGHT ANGLE VERSION

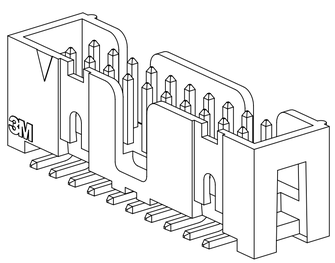

25XX-6V0C

SURFACE MOUNT VERSION

2 PHYSICAL:

INSULATOR:	
MATERIAL:	GLASS FILLED POLYESTER (PCT)
FLAMMABILITY:	UL94V-0
COLOR:	BLACK
CONTACT:	
MATERIAL:	COPPER ALLOY
PLATING:	
UNDER PLATING:	100μ" [2.54μm] NICKEL-OVERALL
WIPING AREA:	AVG. GOLD (SEE ORDERING INFORMATION)
SOLDER TAILS:	200μ" [5.08μm] TIN LEAD OR MATTE TIN (SEE ORDERING INFORMATION)
MARKINGS:	3M LOGO, PART IDENTIFICATION NUMBER AND ORIENTATION TRIANGLE

2 ELECTRICAL:

CURRENT RATING:	5.00A, 1 CONTACT POWERED 3.00A, 6 CONTACTS POWERED 1.75A, ALL CONTACTS POWERED RATING CONDITIONS: EIA-364-070 METHOD 2, 30°C MAXIMUM TEMPERATURE RISE, 20% DERATED. REFERENCE APPROPRIATE 3M PRODUCT SPECIFICATION FOR DETAILED CURRENT DERATING CURVES.
INSULATION RESISTANCE:	>1 X $10^9\Omega$ AT 500 V_{DC}
WITHSTANDING VOLTAGE:	1,000V_{RMS} AT SEA LEVEL

2 ENVIRONMENTAL:

TEMPERATURE RATING:	-55°C TO 105°C
PROCESS RATING:	260°C, PER J-STD-020C, SINGLE PASS
MOISTURE SENSITIVITY LEVEL:	1 (PER J-STD-020C)

NOTES

1. REGULATORY INFORMATION: ROHS COMPLIANT. SEE THE REGULATORY INFORMATION APPENDIX (RIA) IN THE "ROHS COMPLIANCE" SECTION OF WWW.3MCONNECTORS.COM FOR COMPLIANCE INFORMATION.
2. IN THE EVENT OF CONFLICT BETWEEN THIS DATA AND THAT CONTAINED IN THE PRODUCT SPECIFICATION, THE PRODUCT SPECIFICATION TAKES PRECEDENT.
3. NOTCHES A & C WILL ACCOMODATE 3M POLARIZING KEY: N3518.
4. CONTACT TAILS .0245 [.622] WIDE WITH .0075 [.191] CORNER RADII AND .028 [.072] DIAGONAL.
5. SOLDER STANDOFFS FACILITATE .01 [.3] CLEARANCE ABOVE BOARD FOR REFLOW SOLDERING.

DIMENSIONS: INCHES [MM]
[MM] IS REF. ONLY

REV	ECO	ISSUE DATE AND DESCRIPTION	DRFT	CHKD
N	68908	AUG 02,2016 REVISE DIM ON SHT2 & CLIP CHART ON SHT5	JNC	SC
M	56068	AUG 11,2014 REVISED AND REDRAWN	JNC	RS

DESIGN REFERENCE | NEXT ASSEMBLY

ACCESS CODES

DRFT: CASTIGLIONE DATE: AUG 11,2014 MFG DATE

CHKD DATE APPVL: R. SCHERER DATE: SEP 05,2014

DIVISION: Interconnect Solutions DIVISION CODE: EMSD

DO NOT SCALE DRAWING | SCALE 4/1

THIRD ANGLE PROJECTION

INTERPRET PER ASME Y14.5 - 2009

MAX SURFACE ROUGHNESS: ☐ ALL SURFACES ☐ MARKED ONLY

TOLERANCES EXCEPT AS NOTED

INCHES: .0 ± ; .00 ± .01 ; .000 ± .005 ; .0000 ±

MILLIMETERS: 0 ± ; .0 ± .3 ; .00 ± .13 ; .000 ±

ANGLES ±

© 3M COPYRIGHT 2016
This document and the information it contains are 3M property and may not be reproduced or further distributed without 3M permission, or used or disclosed other than for 3M authorized purposes. All rights reserved.

3M Center St. Paul, MN 55144

TITLE: HEADER, 4-WALL, LO-PRO, .100 X .100, SMT, STRAIGHT & RA

CAGE NUMBER | SIZE D | DRAWING NO. 78-5100-0770-7 | REV. N

MODEL: 2500 SERIES | DET LISTS ☐ YES ☒ NO | SHT 1 OF 5

78-5100-0770-7 N

UL FILE NO: E68080

3M ELECTRONIC MATERIALS SOLUTIONS DIVISION
INTERCONNECT SOLUTIONS
http://www.3mconnectors.com

3M IS A TRADEMARK OF 3M COMPANY.
FOR TECHNICAL, SALES OR ORDERING INFORMATION CALL 800-225-5373

Imaged: N.1 8/5/2016 11:10 AM UTC-05:00

3M™ FOUR-WALL HEADER, 2500 SERIES

.100" X .100" LOW PROFILE, SURFACE MOUNT, STRAIGHT AND RIGHT ANGLE THROUGH-HOLE

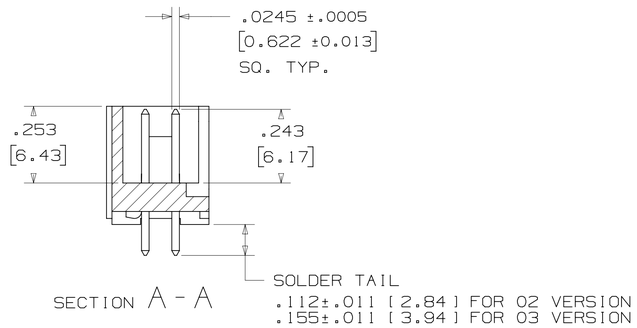

SECTION A - A

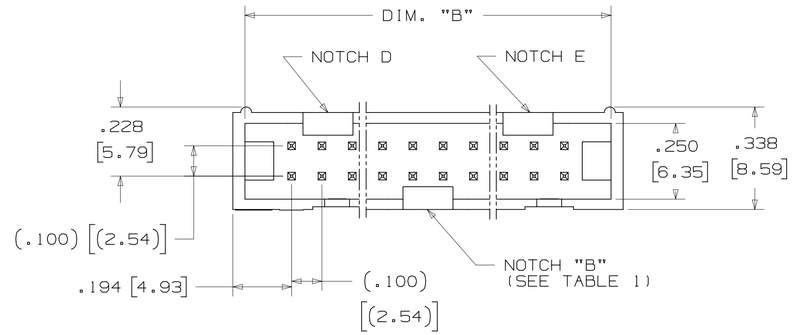

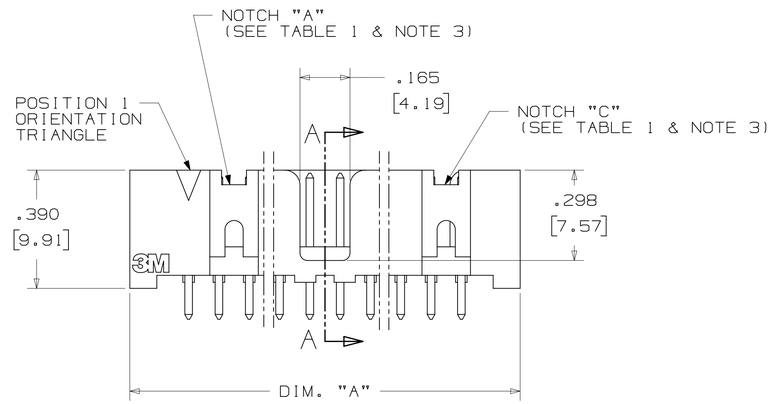

TABLE 1				
PIN QTY.	DIM. "A"	DIM. "B"	POLARIZING NOTCHES	PIN QTY.
06	.588 [14.94]	.508 [12.90]	B	06
08	.688 [17.48]	.608 [15.44]	B	08
10	.788 [20.02]	.708 [17.98]	BC	10
14	.988 [25.10]	.908 [23.06]	BCDE	14
16	1.088 [27.64]	1.008 [25.60]	ABCDE	16
20	1.288 [32.72]	1.208 [30.68]	ABCDE	20
24	1.488 [37.80]	1.408 [35.76]	ABCDE	24
26	1.588 [40.34]	1.508 [38.30]	ABCDE	26
30	1.788 [45.42]	1.708 [43.38]	ABCDE	30
34	1.988 [50.50]	1.908 [48.46]	ABCDE	34
36	2.088 [53.04]	2.008 [51.00]	ABCDE	36
40	2.288 [58.12]	2.208 [56.08]	ABCDE	40
50	2.788 [70.82]	2.708 [68.78]	ABCDE	50
60	3.288 [83.52]	3.208 [81.48]	ABCDE	60
64	3.488 [88.60]	3.408 [86.56]	ABCDE	64

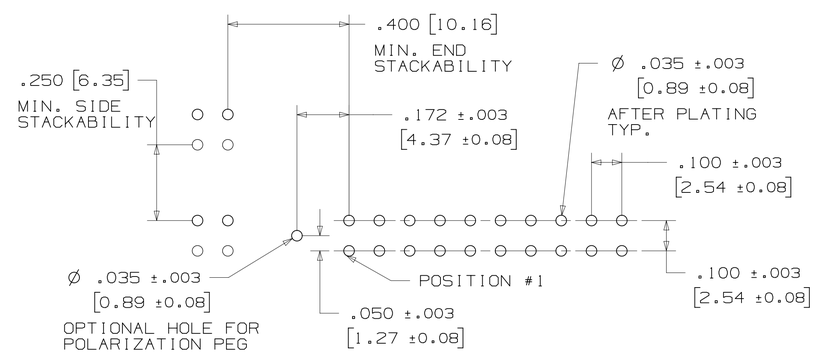

RECOMMENDED HOLE PATTERN

SHOWN FROM COMPONENT SIDE

ORDERING INFORMATION
STRAIGHT VERSION

X25XX-60XX-XX

N= HIGH TEMP BLACK (PCT)
(RB, UB OR UG PLATING REQ'D)
BLANK= (UB OR UG PLATING)

PIN QUANTITY:
(SEE TABLE 1)

SOLDER TAIL:
02 = FOR .062 [1.57] THICK BOARD
03 = FOR .094 TO .125 [2.39 TO 3.18] THICK BOARD

PLATING:
RB = 30μ" [0.76μm] AVG. GOLD
200μ" [5.08μm] MATTE TIN (RIA. E1 & C1 APPLY)
UG = 15μ" [0.38μm] AVG. GOLD
200μ" [5.08μm] 60:40 TIN-LEAD SOLDER TAILS
(RIA E3 & C2 APPLY)
UB = 30μ" [0.76μm] AVG. GOLD
200μ" [5.08μm] 60:40 TIN LEAD SOLDER TAILS
(RIA E3 & C2 APPLY)

REV	ECO	ISSUE DATE AND DESCRIPTION	DRFT	CHKD
N	68908	AUG 02,2016 REVISE DIM ON SHT2 & CLIP CHART ON SHT5	JNC	SC
M	56068	AUG 11,2014 REVISED AND REDRAWN	JNC	RS

DESIGN REFERENCE | NEXT ASSEMBLY | ACCESS CODES

DRFT CASTIGLIONE DATE AUG 11,2014 | MFG | DATE
CHKD | DATE | APPVL R. SCHERER DATE SEP 05,2014

DIVISION: Interconnect Solutions | DIVISION CODE: EMSD

DO NOT SCALE DRAWING | SCALE 4:1

THIRD ANGLE PROJECTION

INTERPRET PER ASME Y14.5 - 2009

MAX SURFACE ROUGHNESS: ALL SURFACES ☐ MARKED ONLY

TOLERANCES EXCEPT AS NOTED
INCHES: .0 ± ; .00 ± .01 ; .000 ± .005 ; .0000 ±
MILLIMETERS: 0 ± ; .0 ± .3 ; .00 ± .13 ; .000 ±
ANGLES ±

3M Center St. Paul, MN 55144

© 3M COPYRIGHT 2016
This document and the information it contains are 3M property and may not be reproduced or further distributed without 3M permission, or used or disclosed other than for 3M authorized purposes. All rights reserved.

TITLE: HEADER, 4-WALL, LO-PRO, .100 X .100, SMT, STRAIGHT & RA

CAGE NUMBER | SIZE D | DRAWING NO. 78-5100-0770-7 | REV. N

MODEL 2500 SERIES | DET LISTS ☐ YES ☒ NO | SHT 2 OF 5

78-5100-0770-7 DRAWING NUMBER | N REVISION

Imaged: N.1 8/5/2016 11:10 AM UTC-05:00

3M™ FOUR-WALL HEADER, 2500 SERIES

.100" X .100" LOW PROFILE, SURFACE MOUNT, STRAIGHT AND RIGHT ANGLE THROUGH-HOLE

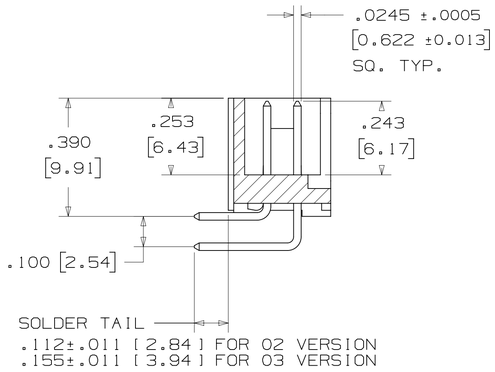

SECTION B - B

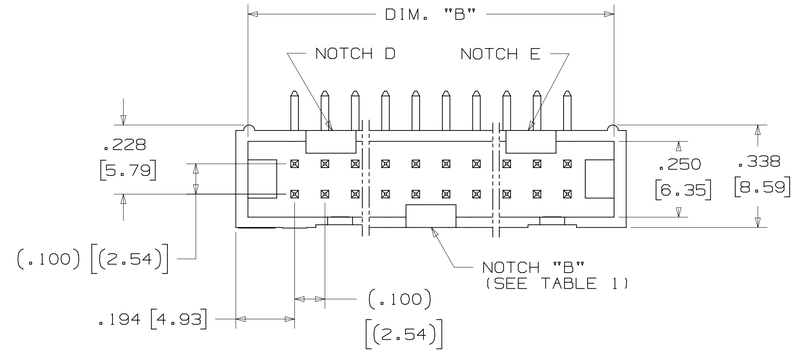

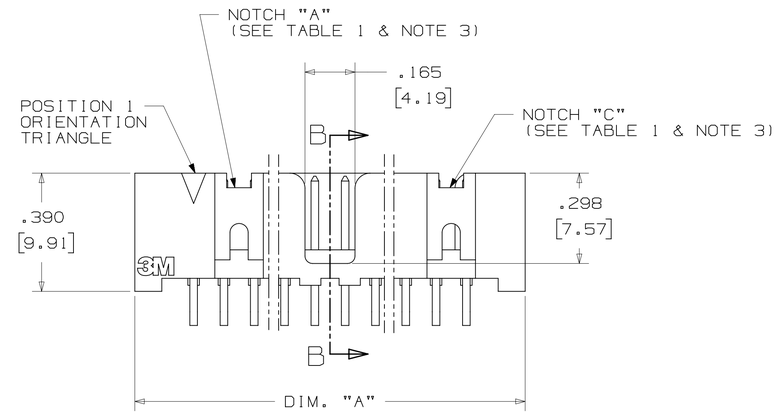

TABLE 1				
PIN QTY.	DIM. "A"	DIM. "B"	POLARIZING NOTCHES	PIN QTY.
06	.588 [14.94]	.508 [12.90]	B	06
08	.688 [17.48]	.608 [15.44]	B	08
10	.788 [20.02]	.708 [17.98]	BC	10
14	.988 [25.10]	.908 [23.06]	BCDE	14
16	1.088 [27.64]	1.008 [25.60]	ABCDE	16
20	1.288 [32.72]	1.208 [30.68]	ABCDE	20
24	1.488 [37.80]	1.408 [35.76]	ABCDE	24
26	1.588 [40.34]	1.508 [38.30]	ABCDE	26
30	1.788 [45.42]	1.708 [43.38]	ABCDE	30
34	1.988 [50.50]	1.908 [48.46]	ABCDE	34
36	2.088 [53.04]	2.008 [51.00]	ABCDE	36
40	2.288 [58.12]	2.208 [56.08]	ABCDE	40
50	2.788 [70.82]	2.708 [68.78]	ABCDE	50
60	3.288 [83.52]	3.208 [81.48]	ABCDE	60
64	3.488 [88.60]	3.408 [86.56]	ABCDE	64

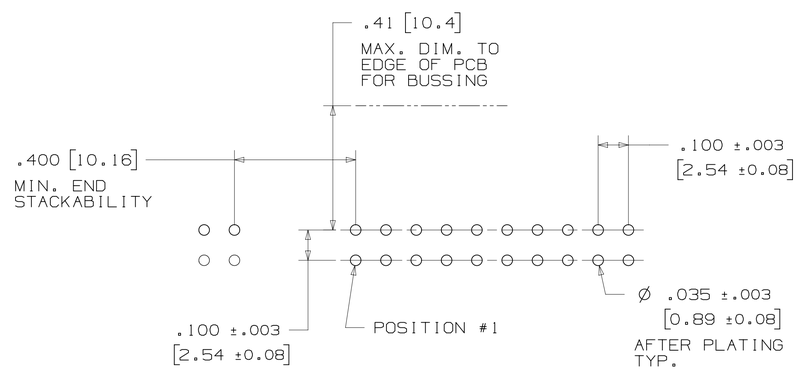

RECOMMENDED HOLE PATTERN

SHOWN FROM COMPONENT SIDE

ORDERING INFORMATION
RIGHT ANGLE VERSION

X25XX-50XX-XX

N= HIGH TEMP BLACK (PCT)
(RB, UB OR UG PLATING REQ'D)
BLANK= (UB OR UG PLATING)

PIN QUANTITY:
(SEE TABLE 1)

SOLDER TAIL:
02 = FOR .062 [1.57] THICK BOARD
03 = FOR .094 TO .125 [2.39 TO 3.18]
THICK BOARD

PLATING:
RB = 30μ" [0.76μm] AVG. GOLD
200μ" [5.08μm] MATTE TIN (RIA. E1 & C1 APPLY)
UG = 15μ" [0.38μm] AVG. GOLD
200μ" [5.08μm] 60:40 TIN-LEAD SOLDER TAILS
(RIA E3 & C2 APPLY)
UB = 30μ" [0.76μm] AVG. GOLD
200μ" [5.08μm] 60:40 TIN LEAD SOLDER TAILS
(RIA E3 & C2 APPLY)

REV	ECO	ISSUE DATE AND DESCRIPTION	DRFT	CHKD
N	68908	AUG 02,2016 REVISE DIM ON SHT2 & CLIP CHART ON SHT5	JNC	SC
M	56068	AUG 11,2014 REVISED AND REDRAWN	JNC	RS

DESIGN REFERENCE | NEXT ASSEMBLY | ACCESS CODES

DRFT CASTIGLIONE DATE AUG 11,2014 MFG DATE
CHKD DATE APPVL R. SCHERER DATE SEP 05,2014

DIVISION Interconnect Solutions | DIVISION CODE EMSD

DO NOT SCALE DRAWING | SCALE 4:1

TOLERANCES EXCEPT AS NOTED
INCHES: .0 ±; .00 ±.01; .000 ±.005; .0000 ±
MILLIMETERS: 0 ±; .0 ±.3; .00 ±.13; .000 ±
ANGLES ±

THIRD ANGLE PROJECTION

INTERPRET PER ASME Y14.5 - 2009

MAX. SURFACE ROUGHNESS: ALL SURFACES; MARKED ONLY

3M Center St. Paul, MN 55144
© 3M COPYRIGHT 2016
This document and the information it contains are 3M property and may not be reproduced or further distributed without 3M permission, or used or disclosed other than for 3M authorized purposes. All rights reserved.

TITLE: HEADER, 4-WALL, LO-PRO, .100 X .100, SMT, STRAIGHT & RA

CAGE NUMBER | SIZE D | DRAWING NO. 78-5100-0770-7 | REV. N

MODEL 2500 SERIES | DET. LISTS ☐ YES ☒ NO | SHT 3 OF 5

78-5100-0770-7 DRAWING NUMBER | N REVISION

Imaged: N.1 8/5/2016 11:10 AM UTC-05:00

3M™ FOUR-WALL HEADER, 2500 SERIES

.100" X .100" LOW PROFILE, SURFACE MOUNT, STRAIGHT AND RIGHT ANGLE THROUGH-HOLE

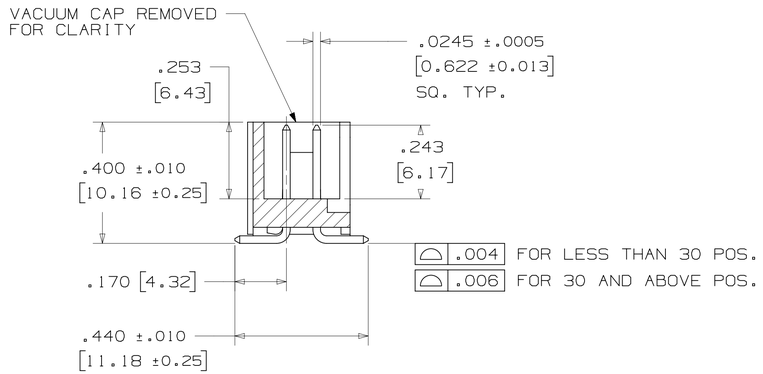

SECTION C - C

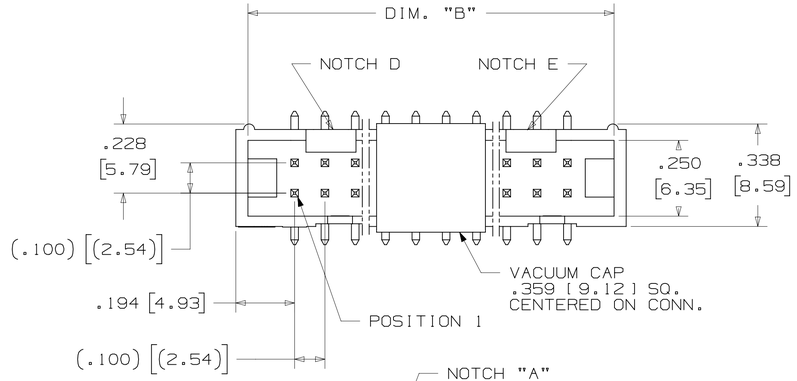

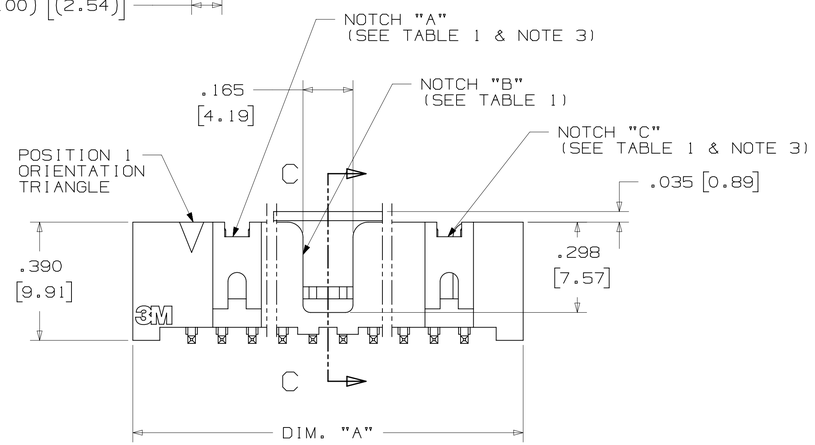

TABLE 1					
PIN QTY.	DIM. "A"	DIM. "B"	POLARIZING NOTCHES	TAPE AND REEL PKG CODE	PIN QTY.
06	.588 [14.94]	.508 [12.90]	B	WD (44 MM)	06
08	.688 [17.48]	.608 [15.44]	B	WD (44 MM)	08
10	.788 [20.02]	.708 [17.98]	BC	WD (44 MM)	10
14	.988 [25.10]	.908 [23.06]	BCDE	WD (44 MM)	14
16	1.088 [27.64]	1.008 [25.60]	ABCDE	WD (44 MM)	16
20	1.288 [32.72]	1.208 [30.68]	ABCDE	WE (56 MM)	20
24	1.488 [37.80]	1.408 [35.76]	ABCDE	WE (56 MM)	24
26	1.588 [40.34]	1.508 [38.30]	ABCDE	WE (56 MM)	26
30	1.788 [45.42]	1.708 [43.38]	ABCDE	WF (72 MM)	30
34	1.988 [50.50]	1.908 [48.46]	ABCDE	WF (72 MM)	34
36	2.088 [53.04]	2.008 [51.00]	ABCDE	WG (88 MM)	36
40	2.288 [58.12]	2.208 [56.08]	ABCDE	WG (88 MM)	40
50	2.788 [70.82]	2.708 [68.78]	ABCDE	WG (88 MM)	50
60	3.288 [83.52]	3.208 [81.48]	ABCDE	WH (120 MM)	60
64	3.488 [88.60]	3.408 [86.56]	ABCDE	WH (120 MM)	64

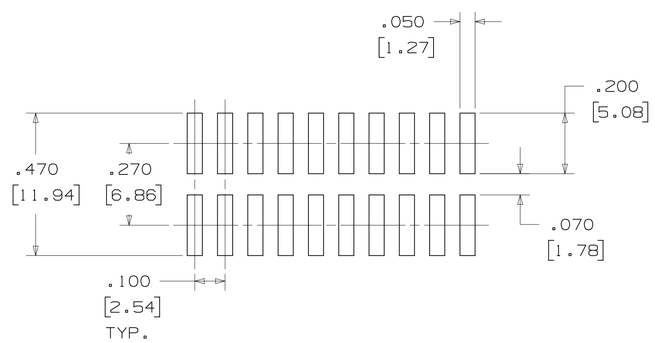

RECOMMENDED PAD LAYOUT

ORDERING INFORMATION
SURFACE MOUNT VERSION

N25XX-6VOC-XX-XX

- N = HIGH TEMP BLACK (PCT) (RB PLATING REQ'D)
- PIN QUANTITY: (SEE TABLE 1)
- PLATING: RB = 30μ" [0.76μm] AVG. GOLD; 200μ" [5.08μm] MATTE TIN (RIA. E1 & C1 APPLY)
- PACKAGING OPTIONS: WX = TAPE & REEL PACKAGING (SEE TABLE 1)

REV	ECO	ISSUE DATE AND DESCRIPTION	DRFT	CHKD
N	68908	AUG 02,2016 REVISE DIM ON SHT2 & CLIP CHART ON SHT5	JNC	SC
M	56068	AUG 11,2014 REVISED AND REDRAWN	JNC	RS

DESIGN REFERENCE | NEXT ASSEMBLY

DRFT: CASTIGLIONE DATE: AUG 11,2014 MFG DATE
CHKD DATE APPVL: R. SCHERER DATE: SEP 05,2014

DIVISION: Interconnect Solutions
DIVISION CODE: EMSD

DO NOT SCALE DRAWING | SCALE 4/1

THIRD ANGLE PROJECTION

INTERPRET PER ASME Y14.5 - 2009

MAX SURFACE ROUGHNESS ☐ ALL SURFACES ☐ MARKED ONLY

TOLERANCES EXCEPT AS NOTED
INCHES: .0 ±; .00 ±.01; .000 ±.005; .0000 ±
MILLIMETERS: 0 ±; .0 ±.3; .00 ±.13; .000 ±
ANGLES ±

© 3M COPYRIGHT 2016
This document and the information it contains are 3M property and may not be reproduced or further distributed without 3M permission, or used or disclosed other than for 3M authorized purposes. All rights reserved.

3M Center, St. Paul, MN 55144

TITLE: HEADER, 4-WALL, LO-PRO, .100 X .100, SMT, STRAIGHT & RA

CAGE NUMBER | SIZE D | DRAWING NO. 78-5100-0770-7 | REV. N

MODEL: 2500 SERIES | DET LISTS ☐ YES ☒ NO | SHT 4 OF 5

78-5100-0770-7 (DRAWING NUMBER) N (REVISION)

Imaged: N.1 8/5/2016 11:10 AM UTC-05:00

3M™ FOUR-WALL HEADER, 2500 SERIES

.100" X .100" LOW PROFILE, SURFACE MOUNT, STRAIGHT AND RIGHT ANGLE THROUGH-HOLE

PART CUSTOMIZATION

THIS SPEC SHEET DETAILS OUR STANDARD OFFERING.

3M HAS SEVERAL CAPABILITIES THAT CAN PROVIDE A PART TAILORED TO YOUR SPECIFIC NEEDS. ASK YOUR 3M SALES REPRESENTATIVE OR CUSTOMER SERVICE FOR MORE DETAILS.

* SELECTIVE PIN REMOVAL (FOR BOARD ASSEMBLY POLARIZATION).
* DIFFERENT PIN LENGTHS.

POLARIZING KEY

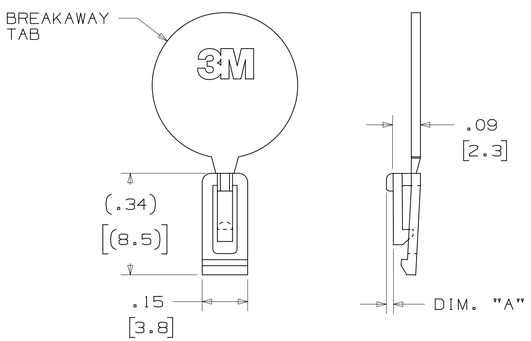

3M PART NO.	MATERIAL	COLOR	DIM. "A"
N3518	LCP	BLACK	.02

NOTE:
#2216 B/A SCOTCHWELD CAN BE USED TO ADHERE KEYS.

LOW PROFILE LATCH

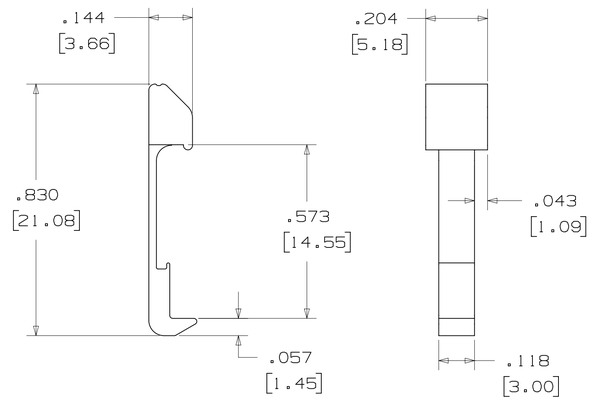

PART NO.	MATERIAL	COLOR
3505-33B	NYLON	BLACK

NOTE:
LATCHES NOT COMPATIBLE WITH REFLOW SOLDERING.
ATTACH LATCHES AFTER SOLDERING.

POLARIZING POST

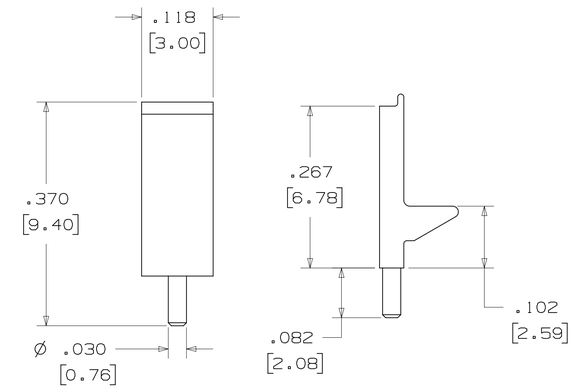

PART NO.	MATERIAL	COLOR
3201-3	PCT	BLACK

SHORT/LONG SOCKET RETAINER CLIP

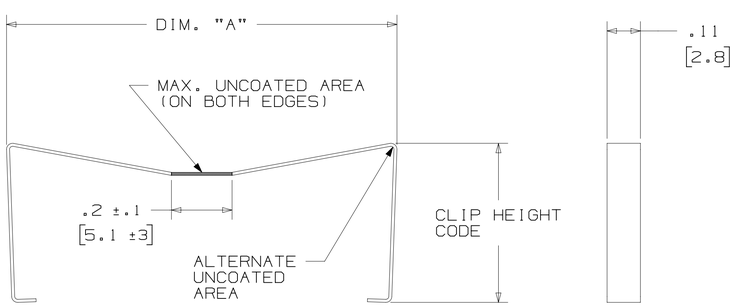

PIN QTY.	DIM. "A"
06	N/A
08	N/A
10	.81 [20.6]
14	1.02 [25.9]
16	1.12 [28.4]
20	1.32 [33.5]
24	1.52 [38.7]
26	1.63 [41.4]
30	1.83 [46.4]
34	2.03 [51.6]
36	N/A
40	2.33 [59.2]
50	2.83 [71.9]
60	3.33 [84.6]
64	3.53 [89.7]

NOTE:
STAINLESS STEEL WITH GRAY POLYURETHANE COATING.

3505-8XXX

CLIP HEIGHT CODE
0 = .31 [7.9] FOR SOCKETS WITHOUT STRAIN RELIEF
1 = .53 [13.5] FOR SOCKETS WITH STRAIN RELIEF

PIN COUNT (SEE TABLE)

NOTE:
1) THE FOLLOWING RETAINER CLIPS HAVE BEEN DISCONTINUED:
3505-8064
3505-8124
3505-8150

REV	ECO	ISSUE DATE AND DESCRIPTION	DRFT	CHKD
N	68908	AUG 02,2016 REVISE DIM ON SHT2 & CLIP CHART ON SHT5	JNC	SC
M	56068	AUG 11,2014 REVISED AND REDRAWN	JNC	RS

DESIGN REFERENCE / NEXT ASSEMBLY / ACCESS CODES

DRFT CASTIGLIONE — DATE AUG 11,2014 — MFG — DATE
CHKD — DATE — APPVL R. SCHERER — DATE SEP 05,2014

DIVISION: Interconnect Solutions — DIVISION CODE: EMSD

DO NOT SCALE DRAWING — SCALE 4/1

THIRD ANGLE PROJECTION

INTERPRET PER ASME Y14.5 - 2009

MAX SURFACE ROUGHNESS: ☐ ALL SURFACES ☐ MARKED ONLY

TOLERANCES EXCEPT AS NOTED
INCHES: .0 ± ; .00 ±.01 ; .000 ±.005 ; .0000 ±
MILLIMETERS: 0 ± ; .0 ±.3 ; .00 ±.13 ; .000 ±
ANGLES ±

© 3M COPYRIGHT 2016
This document and the information it contains are 3M property and may not be reproduced or further distributed without 3M permission, or used or disclosed other than for 3M authorized purposes. All rights reserved.

3M Center, St. Paul, MN 55144

TITLE: HEADER, 4-WALL, LO-PRO, .100 X .100, SMT, STRAIGHT & RA

CAGE NUMBER — SIZE D — DRAWING NO. 78-5100-0770-7 — REV. N

MODEL: 2500 SERIES — DET LISTS ☐ YES ☒ NO — SHT 5 OF 5

78-5100-0770-7 (DRAWING NUMBER) — N (REVISION)

Imaged: N.1 8/5/2016 11:10 AM UTC-05:00