3M™ FOUR-WALL HEADER, 3000 SERIES

.100" X .100" LATCH/EJECTOR, STRAIGHT, COMPLIANT PIN

* MILITARY (WITH 3M'S N3518 POLARIZING KEY) AND CENTERBUMP POLARIZATION.
* OPTIONAL EJECTOR LATCHES.
* MOUNTING HOLES FOR SECURING HEADER TO BOARD.
* DEPENDABLE EYE-OF-THE NEEDLE PIN DESIGN.
* OPTIONAL POLARIZING POSTS AVAILABLE.
* HIGH TERMERATURE INSULATOR.

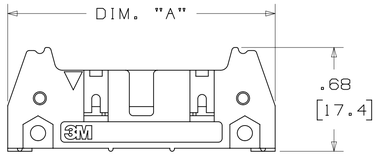

-600T02

HEADER WITHOUT LATCH EJECTOR

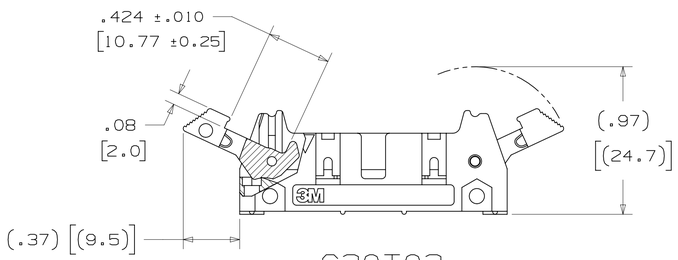

-620T02

HEADER WITH SHORT LATCH EJECTOR
FOR 3M SOCKETS WITHOUT STRAIN RELIEF

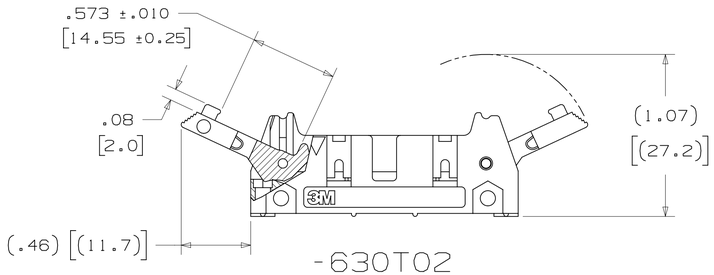

-630T02

HEADER WITH LONG LATCH EJECTOR
FOR 3M SOCKETS WITH STRAIN RELIEF

2 PHYSICAL:

INSULATOR:	
MATERIAL:	GLASS FILLED POLYESTER (PCT)
FLAMMABILITY:	UL94V-0
COLOR:	BLACK
CONTACT:	
MATERIAL:	COPPER ALLOY
PLATING:	
UNDER PLATING:	100μ" [2.54μm] NICKEL
WIPING AREA:	30μ" [0.76μm] AVG. GOLD
SOLDER TAILS:	100μ" [2.54μm] TIN LEAD OR 300μ" [7.62μm] MATTE TIN (SEE ORDERING INFORMATION)
MARKINGS:	3M LOGO, PART IDENTIFICATION NUMBER AND ORIENTATION TRIANGLE

2 ELECTRICAL:

CURRENT RATING:	1A
INSULATION RESISTANCE:	>1 X $10^9\Omega$ AT 500 V_{DC}
WITHSTANDING VOLTAGE:	1,000V_{RMS} AT SEA LEVEL

2 ENVIRONMENTAL:

TEMPERATURE RATING: -55°C TO 105°C

NOTES

1. REGULATORY INFORMATION: ROHS COMPLIANT. SEE THE REGULATORY INFORMATION APPENDIX (RIA) IN THE "ROHS COMPLIANCE" SECTION OF WWW.3MCONNECTORS.COM FOR COMPLIANCE INFORMATION.
2. IN THE EVENT OF CONFLICT BETWEEN THIS DATA AND THAT CONTAINED IN THE PRODUCT SPECIFICATION, THE PRODUCT SPECIFICATION TAKES PRECEDENT.
3. NOTCHES A & C WILL ACCOMODATE 3M POLARIZING KEY: N3518.
4. MOUNTING HARDWARE:
   REAR ENTRY:
   #4-24 THREAD CUTTING SCREW (3M PART #3341-5) WITH Ø.116 [2.95] MOUNTING HOLE.
   FRONT ENTRY:
   (PRIOR TO INSTALLATION OF LATCH) #2-56 BOLT AND NUT (3M PART #3341-6) WITH Ø.106 [2.69] MOUNTING HOLE.

ORDERING INFORMATION

X XXXX-6X0T02XX

N= HIGH TEMP BLACK (PCT)/(RB PLATING REQ'D)
BLANK= (TC PLATING REQUIRED)

3M PART NUMBER:
(SEE TABLE 1)

LATCH/EJECTOR SYSTEM:
0 = NO LATCH/EJECTOR INSTALLED
2 = SHORT ROLL PIN LATCH/EJECTORS
3 = LONG ROLL PIN LATCH/EJECTORS

PLATING:
RB = 30μ" [0.76μm] GOLD WITH MATTE TIN TAILS (APP. E1 & C1 APPLY)
TC = 30μ" [0.76μm] GOLD WITH TIN LEAD TAILS (APP. E2 & C2 APPLY)

3M ELECTRONIC MATERIALS SOLUTIONS DIVISION
INTERCONNECT SOLUTIONS
http://www.3mconnectors.com

3M IS A TRADEMARK OF 3M COMPANY.
FOR TECHNICAL, SALES OR ORDERING INFORMATION CALL 800-225-5373

UL FILE NO: E68080

DIMENSIONS: INCHES [MM]
[MM] IS REF. ONLY

REV	ECO	ISSUE DATE AND DESCRIPTION	DRFT	CHKD
E	56068	JUL 31,2014 REVISED AND REDRAWN	JNC	RS

DESIGN REFERENCE | NEXT ASSEMBLY | ACCESS CODES

DRFT CASTIGLIONE DATE JUL 31,2014 | MFG | DATE

CHKD | DATE | APPVL R. SCHERER DATE SEP 05,2014

DIVISION: Interconnect Solutions | DIVISION CODE: EMSD

DO NOT SCALE DRAWING | SCALE 2/1

THIRD ANGLE PROJECTION

INTERPRET PER ASME Y14.5 - 2009

MAX SURFACE ROUGHNESS ☐ ALL SURFACES ☐ MARKED ONLY

TOLERANCES EXCEPT AS NOTED
INCHES: .0 ±; .00 ±.01; .000 ±.005; .0000 ±
MILLIMETERS: 0 ±; .0 ±.3; .00 ±.13; .000 ±
ANGLES ±

© 3M COPYRIGHT 2015
This document and the information it contains are 3M property and may not be reproduced or further distributed without 3M permission, or used or disclosed other than for 3M authorized purposes. All rights reserved.

3M Center St. Paul, MN 55144

TITLE: HEADER, 4-WALL, .100 X .100 LATCH/EJECTOR, STR, COMPLIANT PIN

CAGE NUMBER | SIZE D | DRAWING NO. 78-5100-0478-7 | REV. E

MODEL 3000 SERIES | DET. LIST ☐ YES ☒ NO | SHT 1 OF 4

78-5100-0478-7 (DRAWING NUMBER) E (REVISION)

Imaged: E.4 2/10/2015 8:22 AM UTC-06:00

3M™ FOUR-WALL HEADER, 3000 SERIES

.100" X .100" LATCH/EJECTOR, STRAIGHT, COMPLIANT PIN

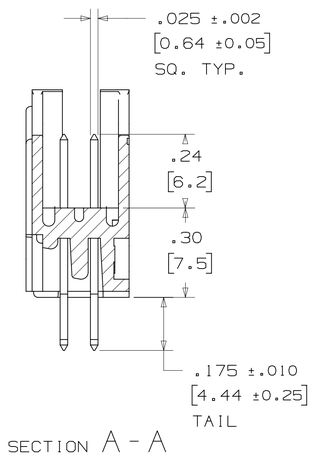

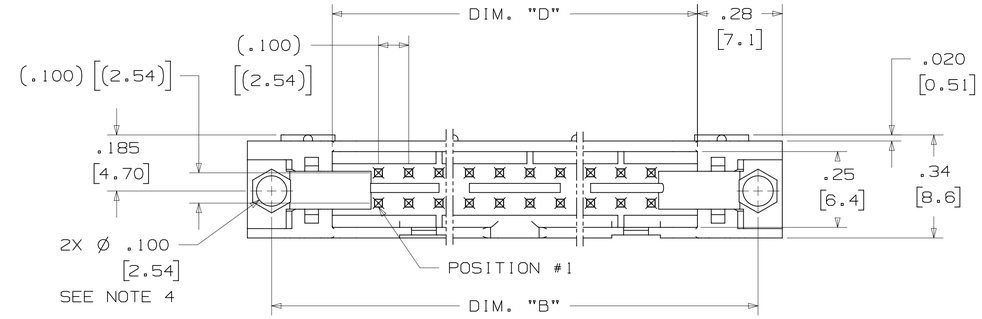

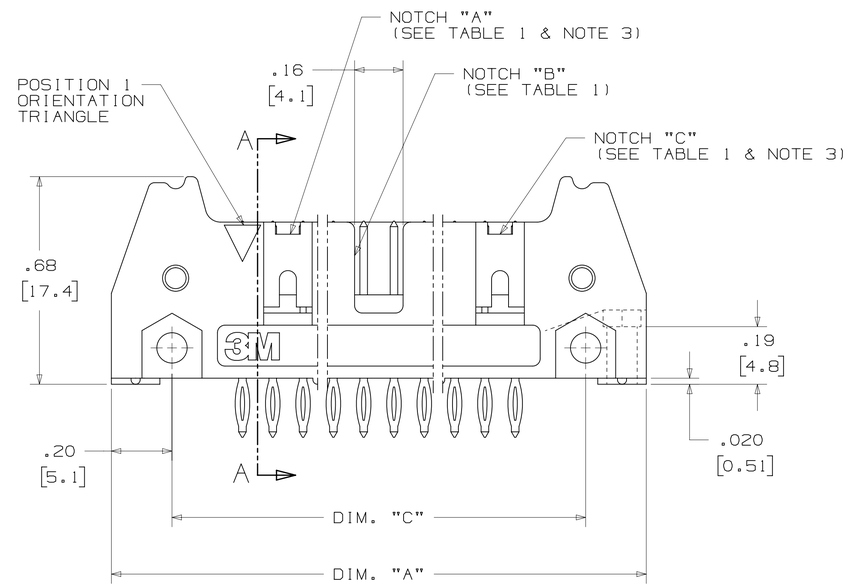

TABLE 1								
PIN QTY.	3M PART NUMBER	DIM. "A"	DIM. "B"	DIM. "C"	DIM. "D"	POLARIZING NOTCHES	INSERTION PLATEN 3442-00XX	PIN QTY.
10	3793	1.26 [32.1]	1.105 [28.04]	.865 [21.97]	.71 [18.0]	BC	3442-0048	10
14	3314	1.46 [37.2]	1.305 [33.12]	1.065 [27.05]	.91 [23.1]	BC	3442-0049	14
16	3408	1.56 [39.7]	1.405 [35.66]	1.165 [29.59]	1.01 [25.6]	ABC	3442-0050	16
20	3428	1.76 [44.8]	1.604 [40.74]	1.365 [34.67]	1.21 [30.7]	ABC	3442-0051	20
24	3627	1.96 [49.9]	1.805 [45.82]	1.565 [39.75]	1.41 [35.8]	ABC	3442-0052	24
26	3429	2.06 [52.4]	1.905 [48.36]	1.665 [42.29]	1.51 [38.3]	ABC	3442-0053	26
30	3440	2.26 [57.5]	2.105 [53.44]	1.865 [47.37]	1.71 [43.4]	ABC	3442-0054	30
34	3431	2.46 [62.6]	2.305 [58.52]	2.065 [52.45]	1.91 [48.5]	ABC	3442-0055	34
40	3432	2.76 [70.2]	2.605 [66.14]	2.365 [60.07]	2.21 [56.1]	ABC	3442-0056	40
50	3433	3.26 [82.9]	3.105 [78.84]	2.865 [72.77]	2.71 [68.8]	ABC	3442-0057	50
60	3372	3.76 [95.6]	3.605 [91.54]	3.365 [85.47]	3.21 [81.5]	ABC	3442-0058	60
64	3764	3.96 [100.7]	3.805 [96.62]	3.565 [90.55]	3.41 [86.6]	ABC	3442-0059	64

ASSEMBLY EQUIPMENT:
USE 3442-00XX PLATEN (SEE TABLE #1) AND APPROPRIATE COMMERCIAL ARBOR PRESS TO PRESS HEADER INTO PC BOARD.

REV	ECO	ISSUE DATE AND DESCRIPTION	DRFT	CHKD
E	56068	JUL 31,2014 REVISED AND REDRAWN	JNC	RS

DESIGN REFERENCE — NEXT ASSEMBLY — ACCESS CODES

DRFT: CASTIGLIONE — DATE: JUL 31,2014 — MFG — DATE
CHKD — DATE — APPVL: R. SCHERER — DATE: SEP 05,2014

DIVISION: Interconnect Solutions — DIVISION CODE: EMSD

DO NOT SCALE DRAWING — SCALE 4/1

TOLERANCES EXCEPT AS NOTED
INCHES: .0 ± ; .00 ± .01 ; .000 ± .005 ; .0000 ±
MILLIMETERS: 0 ± ; .0 ± .3 ; .00 ± .13 ; .000 ±
ANGLES ±

THIRD ANGLE PROJECTION

INTERPRET PER ASME Y14.5 - 2009

MAX SURFACE ROUGHNESS: ALL SURFACES — MARKED ONLY

3M Center, St. Paul, MN 55144
© 3M COPYRIGHT 2015
This document and the information it contains are 3M property and may not be reproduced or further distributed without 3M permission, or used or disclosed other than for 3M authorized purposes. All rights reserved.

TITLE: HEADER, 4-WALL, .100 X .100 LATCH/EJECTOR, STR, COMPLIANT PIN

CAGE NUMBER — SIZE: D — DRAWING NO. 78-5100-0478-7 — REV. E

MODEL: 3000 SERIES — DET. LISTS ☐ YES ☒ NO — SHT 2 OF 4

78-5100-0478-7 (DRAWING NO. & LAYER) — E (REVISION)

Imaged: E.4 2/10/2015 8:22 AM UTC-06:00

3M™ FOUR-WALL HEADER, 3000 SERIES

.100" X .100" LATCH/EJECTOR, STRAIGHT, COMPLIANT PIN

NOTE:
PCB HOLE SIZES AND TOLERANCES RECOMMEDNED FOR USE WITH 3M'S COMPLIANT PIN HEADER. THE INSERTION FORCE IS DESIGNED NOT TO EXCEED 40 POUNDS PER PIN AND THE WITHDRAWAL FORCE IS NOT LESS THAN 10 POUNDS PER PIN.

HOLE SIZE FOR:
* PREFERRED DRILLED: Ø.0453±.0005
* ACCEPTABLE DRILLED: Ø.0453+.0005/-.0010
* AFTER ETCHBACK: Ø.0460 MAX.
* AFTER PLATING: Ø.040±.003
* BOARD THICKNESS: .093 TO .150

PLATING:
* .001 MIN. COPPER PLATING THICKNESS
* .0003 MIN. TIN PLATING

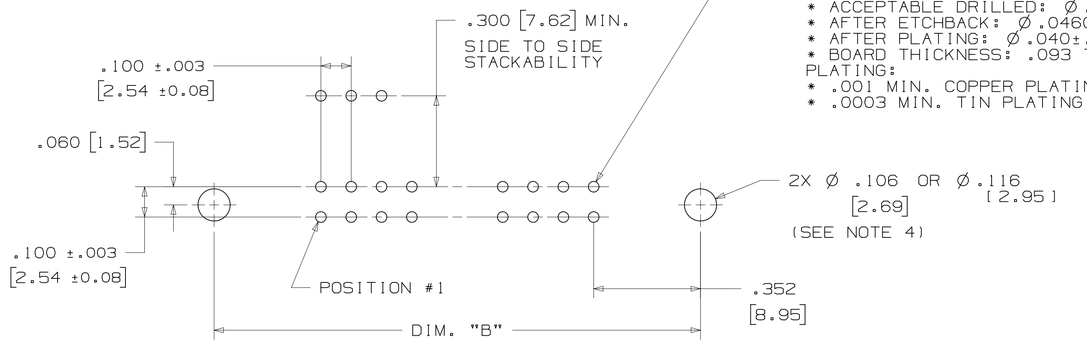

RECOMMENDED MOUNTING HOLE PATTERN

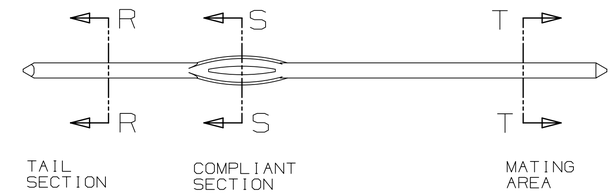

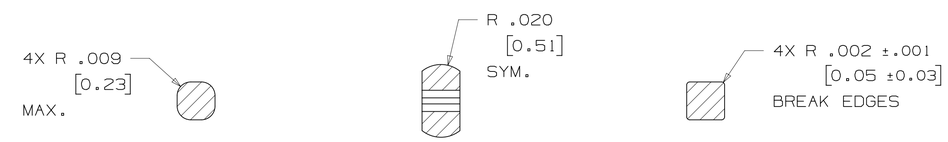

SECTION R-R SECTION S-S SECTION T-T

PART CUSTOMIZATION

THIS SPEC SHEET DETAILS OUR STANDARD OFFERING.

3M HAS SEVERAL CAPABILITIES THAT CAN PROVIDE A PART TAILORED TO YOUR SPECIFIC NEEDS. ASK YOUR 3M SALES REPRESENTATIVE OR CUSTOMER SERVICE FOR MORE DETAILS.

BOTH SNAP-IN AND ROLL PIN LATCHES MAY BE ORDERED SEPARATELY. SNAP-IN AND ROLL PIN STYLE LATCHES ARE DIMENSIONALLY AND FUNCTIONALLY EQUIVALENT. IF ORDERING SNAP-IN OR ROLL PIN STYLE LATCHES SEPARATELY, PLEASE USE THE BELOW CHART.

MATERIAL	SHORT LATCH	LONG LATCH	LATCH STYLE	COLOR
HIGH TEMP. (PCT)	N3505-2B	N3505-3B	ROLL PIN	BLACK
HIGH TEMP (PPA)	N3505-30B	N3505-31B	SNAP-IN	BLACK

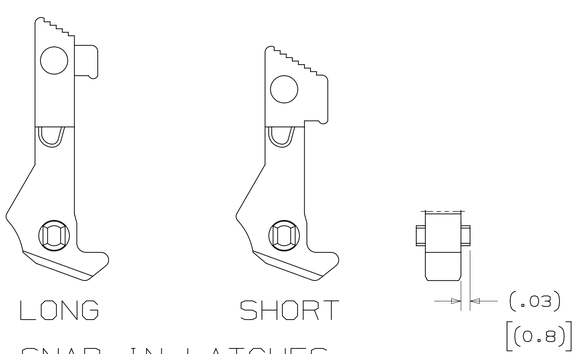

SNAP-IN LATCHES

NOTE:
SNAP-IN LATCHES CAN ONLY BE ORDERED SEPARATELY AND ARE THE CUSTOMERS RESPONSIBILITY TO INSTALL.

POLARIZING POST

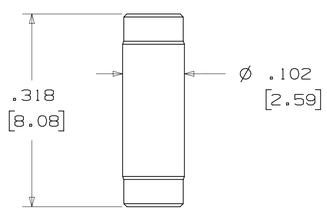

3M PART NO.	MATERIAL	COLOR
3201-4	LCP	BLACK

NOTE:
INSERT POST INTO ONE MOUNTING HARDWARE HOLE ON BOTTOM OF HEADER. SET POST TO PROTRUDE .115 [2.92]

POLARIZING KEY

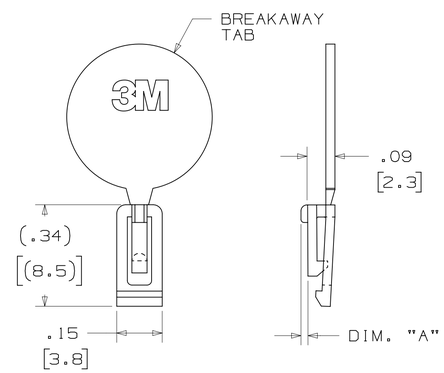

3M PART NO.	MATERIAL	COLOR	DIM. "A"
N3518	LCP	BLACK	.02

NOTE:
#2216 B/A SCOTCHWELD CAN BE USED TO ADHERE KEYS.

REV	ECO	ISSUE DATE AND DESCRIPTION	DRFT	CHKD
E	56068	JUL 31,2014 REVISED AND REDRAWN	JNC	RS

DESIGN REFERENCE NEXT ASSEMBLY
ACCESS CODES

DRFT: CASTIGLIONE DATE: JUL 31,2014 MFG DATE
CHKD DATE APPVL: R. SCHERER DATE: SEP 05,2014

DIVISION: Interconnect Solutions DIVISION CODE: EMSD

DO NOT SCALE DRAWING SCALE 4/1

THIRD ANGLE PROJECTION

INTERPRET PER ASME Y14.5 - 2009

MAX. SURFACE ROUGHNESS ☐ ALL SURFACES ☐ MARKED ONLY

TOLERANCES EXCEPT AS NOTED
INCHES: .0 ± ; .00 ± .01 ; .000 ± .005 ; .0000 ±
MILLIMETERS: 0 ± ; .0 ± .3 ; .00 ± .13 ; .000 ±
ANGLES ±

© 3M COPYRIGHT 2015
This document and the information it contains are 3M property and may not be reproduced or further distributed without 3M permission, or used or disclosed other than for 3M authorized purposes. All rights reserved.

3M Center St. Paul, MN 55144

TITLE: HEADER, 4-WALL, .100 X .100 LATCH/EJECTOR, STR, COMPLIANT PIN

CAGE NUMBER SIZE D DRAWING NO. 78-5100-0478-7 REV. E

MODEL: 3000 SERIES DET. LISTS ☐ YES ☒ NO SHT 3 OF 4

78-5100-0478-7 (DRAWING NUMBER) E (REVISION)

Imaged: E.4 2/10/2015 8:22 AM UTC-06:00

3M™ FOUR-WALL HEADER, 3000 SERIES

.100" X .100" LATCH/EJECTOR, STRAIGHT, COMPLIANT PIN

MOUNTING HARDWARE

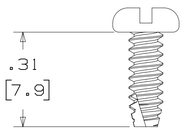

3341-5

(INSTALL FROM BOTTOM OF BOARD)

PANHEAD THREAD CUTTING SCREW:
#4-24 X 5/16"
TYPE: USA STD BT, FEDERAL BG
MATERIAL: STAINLESS STEEL

3341-6

HEX HEAD BOLT, NUT AND WASHER:
BOLT - #2-56 X 1/2"
MATERIAL: STAINLESS STEEL

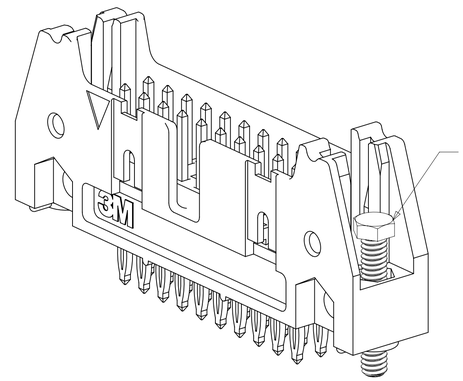

STRAIGHT VERSION INSTALL
(MUST BE INSERTED PRIOR TO
LATCH INSTALL)

3341-6

#2-56 NUT AND BOLT
TORQUE FOR EACH BOLT: 1.25 - 3.125 INCH LBS.

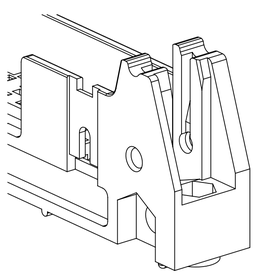

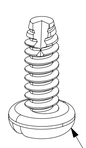

3341-5

#4-24 TYPE BT SELF THREADING SCREW
WHEN USING LATCHES, MAXIMUM LENGTH
OF SCREW IS .250 INCHES PLUS
THICKNESS OF THE BOARD.
TORQUE FOR EACH SCREW IS 3-5 INCH LBS.

REV	ECO	ISSUE DATE AND DESCRIPTION	DRFT	CHKD
E	56068	JUL 31,2014 REVISED AND REDRAWN	JNC	RS

DESIGN REFERENCE | NEXT ASSEMBLY

ACCESS CODES

DRFT CASTIGLIONE DATE JUL 31,2014 | MFG | DATE

CHKD | DATE | APPVL R. SCHERER DATE SEP 05,2014

DIVISION: Interconnect Solutions | DIVISION CODE: EMSD

DO NOT SCALE DRAWING | SCALE 4/1

THIRD ANGLE PROJECTION

INTERPRET PER ASME Y14.5 - 2009

MAX SURFACE ROUGHNESS ☐ ALL SURFACES ☐ MARKED ONLY

TOLERANCES EXCEPT AS NOTED

INCHES
.0 :
.00 : .01
.000 : .005
.0000 :

MILLIMETERS
0 :
.0 : .3
.00 : .13
.000 :

ANGLES ±

© 3M COPYRIGHT 2015
This document and the information it contains are 3M property and may not be reproduced or further distributed without 3M permission, or used or disclosed other than for 3M authorized purposes. All rights reserved.

3M Center, St. Paul, MN 55144

TITLE: HEADER, 4-WALL, .100 X .100 LATCH/EJECTOR, STR, COMPLIANT PIN

CAGE NUMBER | SIZE D | DRAWING NO. 78-5100-0478-7 | REV. E

MODEL 3000 SERIES | DET LISTS ☐ YES ☒ NO | SHT 4 OF 4

78-5100-0478-7 DRAWING NUMBER | E REVISION

Imaged: E.4 2/10/2015 8:22 AM UTC-06:00