# 3M™ THREE-WALL CONDO HEADER, 3000 SERIES

.100" X .100" LATCH/EJECTOR, RIGHT ANGLE

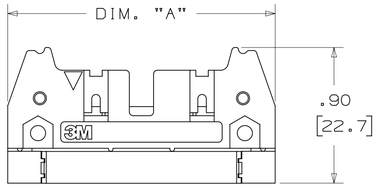


-D00X

HEADER WITHOUT LATCH EJECTOR

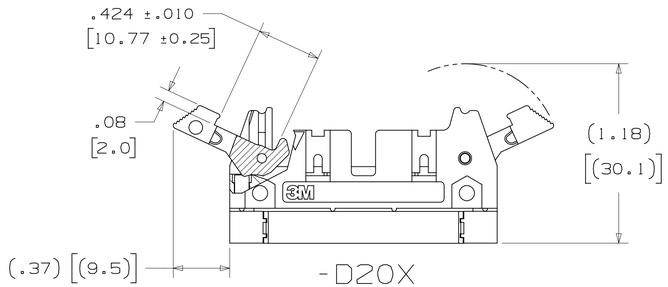


-D20X

HEADER WITH SHORT LATCH EJECTOR
FOR 3M SOCKETS WITHOUT STRAIN RELIEF

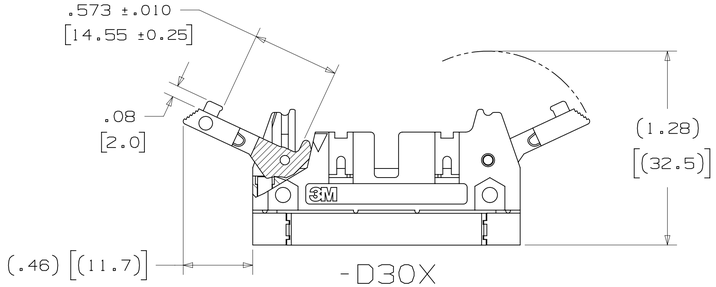


-D30X

HEADER WITH LONG LATCH EJECTOR
FOR 3M SOCKETS WITH STRAIN RELIEF

* STACKED PINS CONSERVE SPACE ON THE CIRCUIT BOARD ALLOWING HIGHER DENSITY PACKAGING.
* PIN QUANTITY TO 128 GIVES DESIGN FLEXIBILITY WITH LATCHING.
* "HDI" ALTERNATIVE.
* THREE-WALL FITS IN VME BOARD STACKING CRITERIA.
* ACCEPTS STANDARD IDC SOCKETS.
* MATES WITH STANDARD FLAT CABLE HARNESSES.
* HIGH TERMERATURE INSULATOR SUITABLE FOR "NO LEAD" SOLDERING OPERATIONS.
* SUITABLE FOR REFLOW SOLDERING USING "PASTE IN HOLE" TECHNIQUES.

## 2 PHYSICAL:

INSULATOR:
MATERIAL: GLASS FILLED POLYESTER (PCT)
FLAMMABILITY: UL94V-0
COLOR: BLACK
CONTACT:
MATERIAL: COPPER ALLOY
PLATING:
UNDER PLATING: 100μ" [2.54μm] NICKEL-OVERALL
WIPING AREA: 30μ" [0.76μm] AVG. GOLD
SOLDER TAILS: 200μ" [5.08μm] TIN LEAD OR MATTE TIN (SEE ORDERING INFORMATION)
MARKINGS: 3M LOGO, PART IDENTIFICATION NUMBER AND ORIENTATION TRIANGLE

## 2 ELECTRICAL:

CURRENT RATING: 1A (EIA 364-70)
INSULATION RESISTANCE: >1 X $10^9\Omega$ AT 500 $V_{DC}$
WITHSTANDING VOLTAGE: 1,000$V_{RMS}$ AT SEA LEVEL

## 2 ENVIRONMENTAL:

TEMPERATURE RATING: -55° C TO 105° C
PROCESS RATING: 260° C, PER J-STD-020C, SINGLE PASS
MOISTURE SENSITIVITY LEVEL: 1 (PER J-STD-020C)

NOTES

1. REGULATORY INFORMATION: ROHS COMPLIANT. SEE THE REGULATORY INFORMATION APPENDIX (RIA) IN THE "ROHS COMPLIANCE" SECTION OF WWW.3MCONNECTORS.COM FOR COMPLIANCE INFORMATION.
2. IN THE EVENT OF CONFLICT BETWEEN THIS DATA AND THAT CONTAINED IN THE PRODUCT SPECIFICATION, THE PRODUCT SPECIFICATION TAKES PRECEDENT.
3. NOTCHES A & C WILL ACCOMODATE 3M POLARIZING KEY: N3518.
4. MOUNTING HARDWARE: FROM SOLDER SIDE OF PC BOARD USE #4-24 THREAD CUTTING SCREW (3M PART #3341-5) WITH Ø.116 [2.95] MOUNTING HOLE.

## ORDERING INFORMATION

X3XXX-DXXXXX

N= HIGH TEMP BLACK (PCT)/(RB PLATING REQ'D)
BLANK= (UB PLATING)

3M PART NUMBER:
(SEE TABLE 1)

LATCH/EJECTOR SYSTEM:
0 = NO LATCH/EJECTOR INSTALLED
2 = SHORT ROLL PIN LATCH/EJECTORS
3 = LONG ROLL PIN LATCH/EJECTORS

PLATING:
RB = 30μ" [0.76μm] GOLD AND 200μ" [5.08μm] MATTE TIN (APP. E1 & C1 APPLY)
UB = 30μ" [0.76μm] GOLD AND 200μ" [5.08μm] TIN LEAD (APP. E3 & C2 APPLY)

TAIL:
02 = FOR .062 [1.57] THICK BOARD
03 = FOR .094 TO .125 [2.39 TO 3.18] THICK BOARD

DIMENSIONS: INCHES [MM]
[MM] IS REF. ONLY

| REV | ECO | ISSUE DATE AND DESCRIPTION | DRFT | CHKD |
|---|---|---|---|---|
| K | 60056 | MAR 06,2015 REVISE ORDERING NUMBER | JNC | RS |
| J | 56068 | AUG 05,2014 REVISED AND REDRAWN | JNC | RS |

DESIGN REFERENCE | NEXT ASSEMBLY
ACCESS CODES

DRFT CASTIGLIONE DATE AUG 05,2014 MFG DATE
CHKD DATE APPVL R. SCHERER DATE SEP 05,2014

DIVISION Interconnect Solutions | DIVISION CODE EMSD

DO NOT SCALE DRAWING | SCALE 2/1

TOLERANCES EXCEPT AS NOTED
INCHES: .0 ±; .00 ±.01; .000 ±.005; .0000 ±
MILLIMETERS: 0 ±; .0 ±.3; .00 ±.13; .000 ±

THIRD ANGLE PROJECTION

INTERPRET PER ASME Y14.5 - 2009

MAX SURFACE ROUGHNESS ☐ ALL SURFACES ☐ MARKED ONLY

ANGLES ±

© 3M COPYRIGHT 2015
This document and the information it contains are 3M property and may not be reproduced or further distributed without 3M permission, or used or disclosed other than for 3M authorized purposes. All rights reserved.

3M Center, St. Paul, MN 55144

TITLE: HEADER, 3-WALL, CONDO, .100 X .100 LATCH/EJECTOR, RA

CAGE NUMBER | SIZE D | DRAWING NO. 78-5100-0773-1 | REV. K

MODEL 3000 SERIES | DET LISTS ☐ YES ☒ NO | SHT 1 OF 3

UL FILE NO: E68080

3M ELECTRONIC MATERIALS SOLUTIONS DIVISION
INTERCONNECT SOLUTIONS
http://www.3mconnectors.com

3M IS A TRADEMARK OF 3M COMPANY.
FOR TECHNICAL, SALES OR ORDERING INFORMATION CALL 800-225-5373

78-5100-0773-1 DRAWING NUMBER | K REVISION

Imaged: K.1 3/6/2015 12:56 PM UTC-06:00

# 3M™ THREE-WALL CONDO HEADER, 3000 SERIES

.100" X .100" LATCH/EJECTOR, RIGHT ANGLE

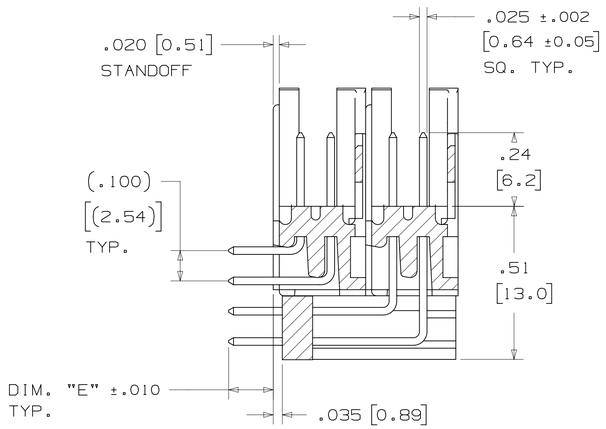


SECTION A - A

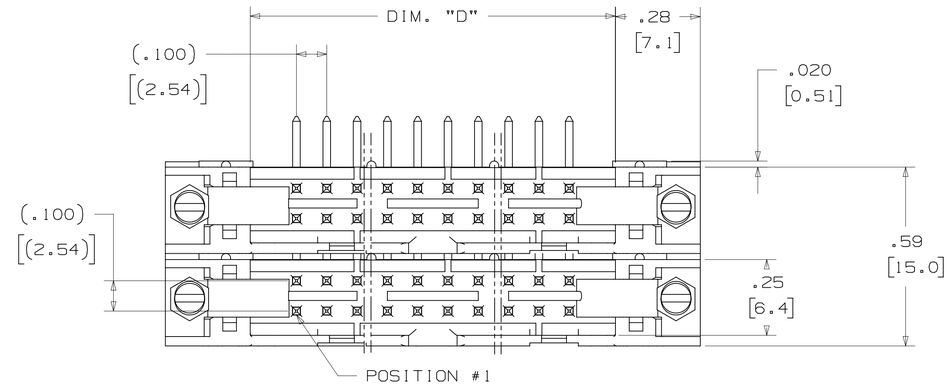


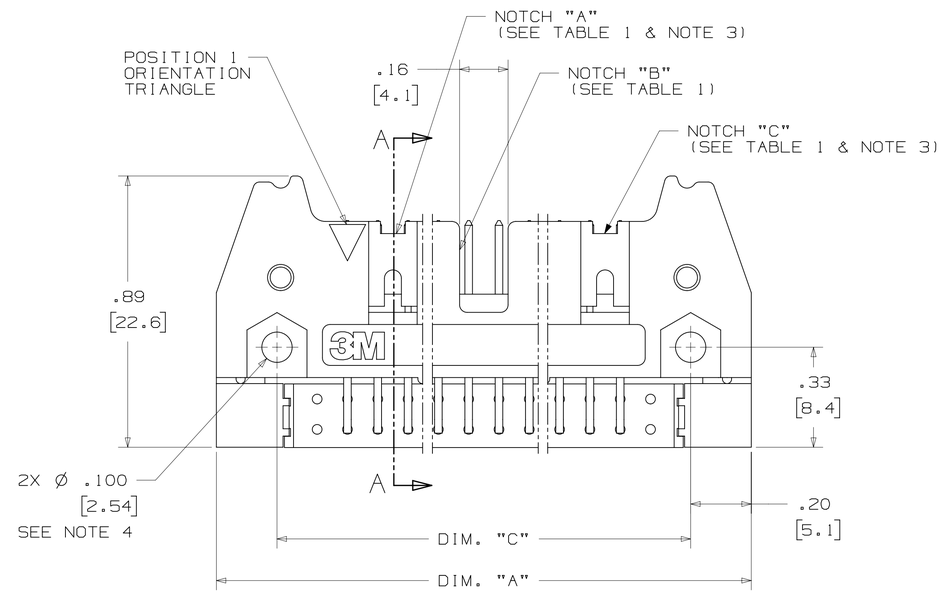


| TABLE 1 | | | | | | |
|---|---|---|---|---|---|---|
| PIN QTY. | 3M PART NUMBER | DIM. "A" | DIM. "C" | DIM. "D" | POLARIZING NOTCHES | PIN QTY. |
| 20 | 3793 | 1.26 [32.1] | .865 [21.97] | .71 [18.0] | BC | 20 |
| 28 | 3314 | 1.46 [37.2] | 1.065 [27.05] | .91 [23.1] | BC | 28 |
| 32 | 3408 | 1.56 [39.7] | 1.165 [29.59] | 1.01 [25.6] | ABC | 32 |
| 40 | 3428 | 1.76 [44.8] | 1.365 [34.67] | 1.21 [30.7] | ABC | 40 |
| 48 | 3627 | 1.96 [49.9] | 1.565 [39.75] | 1.41 [35.8] | ABC | 48 |
| 52 | 3429 | 2.06 [52.4] | 1.665 [42.29] | 1.51 [38.3] | ABC | 52 |
| 60 | 3440 | 2.26 [57.5] | 1.865 [47.37] | 1.71 [43.4] | ABC | 60 |
| 68 | 3431 | 2.46 [62.6] | 2.065 [52.45] | 1.91 [48.5] | ABC | 68 |
| 80 | 3432 | 2.76 [70.2] | 2.365 [60.07] | 2.21 [56.1] | ABC | 80 |
| 100 | 3433 | 3.26 [82.9] | 2.865 [72.77] | 2.71 [68.8] | ABC | 100 |
| 120 | 3372 | 3.76 [95.6] | 3.365 [85.47] | 3.21 [81.5] | ABC | 120 |
| 128 | 3764 | 3.96 [100.7] | 3.565 [90.55] | 3.41 [86.6] | ABC | 128 |

| TABLE 2 | | |
|---|---|---|
| 3M PART NUMBER SUFFIX | CONTACT TAIL | DIM. "E" |
| -XX02 | 02 | .112 [2.84] |
| -XX03 | 03 | .155 [3.94] |

NOTE:
.112 [2.84] TAIL LENGTH SUITABLE FOR
.062 [1.57] THICK PC BOARD.

| REV | ECO | ISSUE DATE AND DESCRIPTION | DRFT | CHKD |
|---|---|---|---|---|
| K | 60056 | MAR 06,2015 REVISE ORDERING NUMBER | JNC | RS |
| J | 56068 | AUG 05,2014 REVISED AND REDRAWN | JNC | RS |

DESIGN REFERENCE | NEXT ASSEMBLY | ACCESS CODES

DRFT CASTIGLIONE DATE AUG 05,2014 | MFG | DATE
CHKD | DATE | APPVL R. SCHERER DATE SEP 05,2014

DIVISION Interconnect Solutions | DIVISION CODE EMSD

DO NOT SCALE DRAWING | SCALE 4/1

THIRD ANGLE PROJECTION

INTERPRET PER ASME Y14.5 - 2009

MAX SURFACE ROUGHNESS ☐ ALL SURFACES ☐ MARKED ONLY

TOLERANCES EXCEPT AS NOTED
INCHES: .0 ± ; .00 ± .01 ; .000 ± .005 ; .0000 ±
MILLIMETERS: 0 ± ; .0 ± .3 ; .00 ± .13 ; .000 ±
ANGLES ±

3M Center St. Paul, MN 55144

© 3M COPYRIGHT 2015
This document and the information it contains are 3M property and may not be reproduced or further distributed without 3M permission, or used or disclosed other than for 3M authorized purposes. All rights reserved.

TITLE
HEADER, 3-WALL, CONDO, .100 X .100 LATCH/EJECTOR, RA

CAGE NUMBER | SIZE D | DRAWING NO. 78-5100-0773-1 | REV. K

MODEL 3000 SERIES | DET LISTS ☐ YES ☒ NO | SHT 2 OF 3

78-5100-0773-1 DRAWING NUMBER | K REVISION

Imaged: K.1 3/6/2015 12:56 PM UTC-06:00

# 3M™ THREE-WALL CONDO HEADER, 3000 SERIES

.100" X .100" LATCH/EJECTOR, RIGHT ANGLE

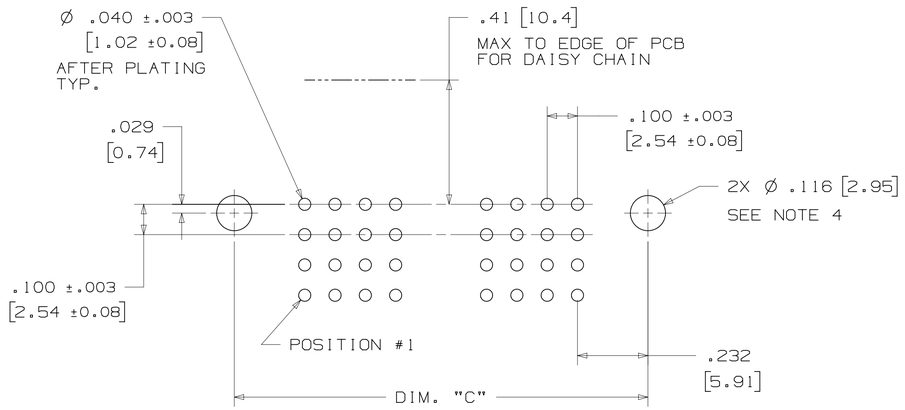


## RECOMMENDED MOUNTING HOLE PATTERN

## MOUNTING HARDWARE

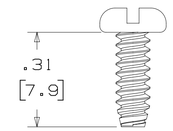


3341-5

(INSTALL FROM BOTTOM OF BOARD)

PANHEAD THREAD CUTTING SCREW:
#4-24 X 5/16"
TYPE: USA STD BT, FEDERAL BG
MATERIAL: STAINLESS STEEL

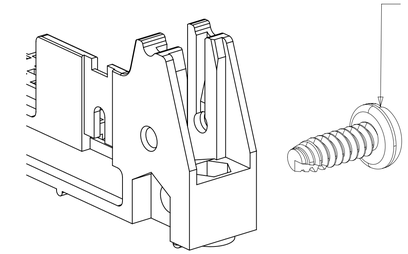

#4-24 TYPE BT SELF THREADING SCREW WHEN USING LATCHES, MAXIMUM LENGTH OF SCREW IS .250 INCHES PLUS THICKNESS OF THE BOARD.
TORQUE FOR EACH SCREW IS 3-5 INCH LBS.

## PART CUSTOMIZATION

THIS SPEC SHEET DETAILS OUR STANDARD OFFERING.

3M HAS SEVERAL CAPABILITIES THAT CAN PROVIDE A PART TAILORED TO YOUR SPECIFIC NEEDS. ASK YOUR 3M SALES REPRESENTATIVE OR CUSTOMER SERVICE FOR MORE DETAILS.

BOTH SNAP-IN AND ROLL PIN LATCHES MAY BE ORDERED SEPARATELY. SNAP-IN AND ROLL PIN STYLE LATCHES ARE DIMENSIONALLY AND FUNCTIONALLY EQUIVALENT. IF ORDERING SNAP-IN OR ROLL PIN STYLE LATCHES SEPARATELY, PLEASE USE THE BELOW CHART.

| MATERIAL | SHORT LATCH | LONG LATCH | LATCH STYLE | COLOR |
|---|---|---|---|---|
| HIGH TEMP. (PCT) | N3505-2B | N3505-3B | ROLL PIN | BLACK |
| HIGH TEMP (PPA) | N3505-30B | N3505-31B | SNAP-IN | BLACK |

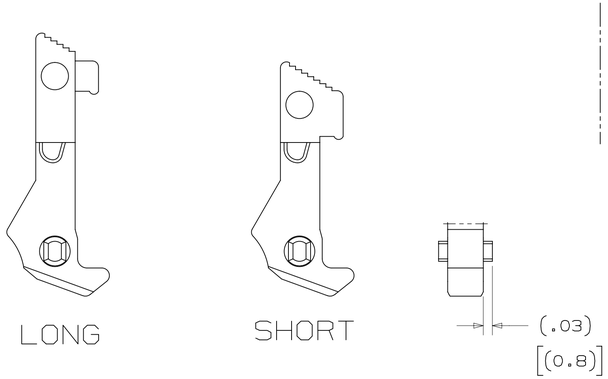


## SNAP-IN LATCHES

NOTE:
SNAP-IN LATCHES CAN ONLY BE ORDERED SEPARATELY AND ARE THE CUSTOMERS RESPONSIBILITY TO INSTALL.

## POLARIZING POST

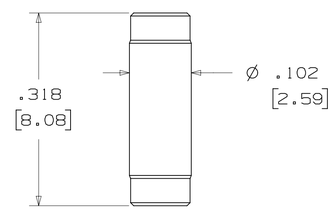


| 3M PART NO. | MATERIAL | COLOR |
|---|---|---|
| 3201-4 | LCP | BLACK |

NOTE:
INSERT POST INTO ONE MOUNTING HARDWARE HOLE ON BOTTOM OF HEADER. SET POST TO PROTRUDE .115 [2.92]

## POLARIZING KEY

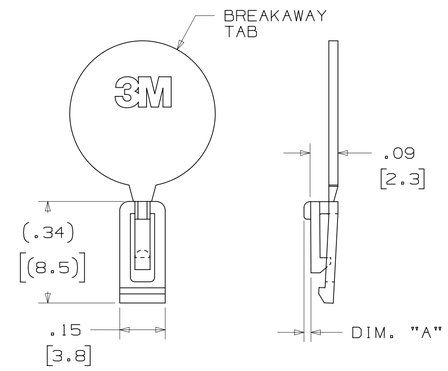


| 3M PART NO. | MATERIAL | COLOR | DIM. "A" |
|---|---|---|---|
| N3518 | LCP | BLACK | .02 |

NOTE:
#2216 B/A SCOTCHWELD CAN BE USED TO ADHERE KEYS.

| REV | ECO | ISSUE DATE AND DESCRIPTION | DRFT | CHKD |
|---|---|---|---|---|
| K | 60056 | MAR 06,2015 REVISE ORDERING NUMBER | JNC | RS |
| J | 56068 | AUG 05,2014 REVISED AND REDRAWN | JNC | RS |

DESIGN REFERENCE | NEXT ASSEMBLY | ACCESS CODES

DRFT: CASTIGLIONE | DATE: AUG 05,2014 | MFG | DATE

CHKD | DATE | APPVL: R. SCHERER | DATE: SEP 05,2014

DIVISION: Interconnect Solutions | DIVISION CODE: EMSD

DO NOT SCALE DRAWING | SCALE 4/1

THIRD ANGLE PROJECTION

INTERPRET PER ASME Y14.5 - 2009

MAX SURFACE ROUGHNESS: ☐ ALL SURFACES ☐ MARKED ONLY

TOLERANCES EXCEPT AS NOTED
INCHES: .0 ± ; .00 ± .01 ; .000 ± .005 ; .0000 ±
MILLIMETERS: 0 ± ; .0 ± .3 ; .00 ± .13 ; .000 ±
ANGLES ±

© 3M COPYRIGHT 2015
This document and the information it contains are 3M property and may not be reproduced or further distributed without 3M permission, or used or disclosed other than for 3M authorized purposes. All rights reserved.

3M Center, St. Paul, MN 55144

TITLE: HEADER, 3-WALL, CONDO, .100 X .100 LATCH/EJECTOR, RA

CAGE NUMBER | SIZE: D | DRAWING NO. 78-5100-0773-1 | REV. K

MODEL: 3000 SERIES | DET LISTS ☐ YES ☒ NO | SHT 3 OF 3

78-5100-0773-1 DRAWING NUMBER | K REVISION

Imaged: K.1 3/6/2015 12:56 PM UTC-06:00