3M™ FOUR-WALL HEADER, 3000 SERIES

.100" X .100" LATCH/EJECTOR, STRAIGHT AND RIGHT ANGLE

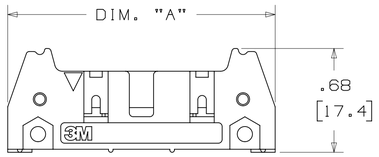

-X0XX

HEADER WITHOUT LATCH EJECTOR

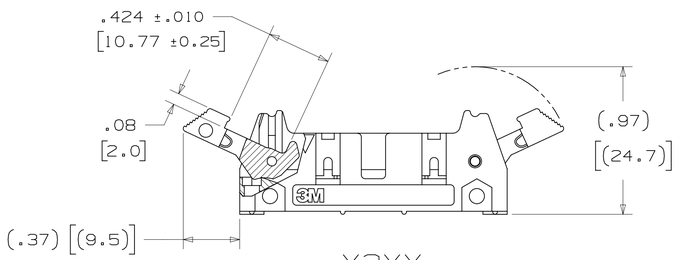

-X2XX

HEADER WITH SHORT LATCH EJECTOR
FOR 3M SOCKETS WITHOUT STRAIN RELIEF

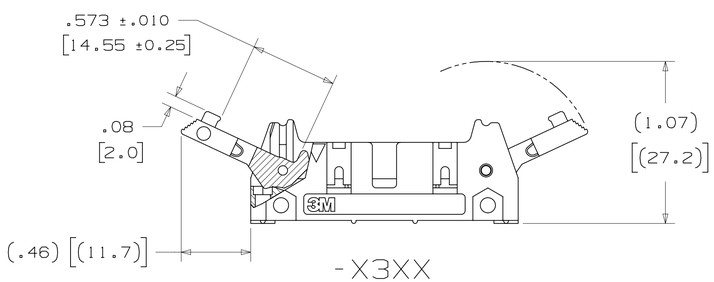

-X3XX

HEADER WITH LONG LATCH EJECTOR
FOR 3M SOCKETS WITH STRAIN RELIEF

* MILITARY (WITH 3M'S N3518 POLARIZING KEY) AND CENTERBUMP POLARIZATION.
* OPTIONAL EJECTOR LATCHES.
* MOUNTING HOLES FOR SECURING HEADER TO BOARD.
* OPTIONAL POLARIZING POSTS AVAILABLE.
* HIGH TERMERATURE INSULATOR SUITABLE FOR "NO LEAD" SOLDERING OPERATIONS.
* SUITABLE FOR REFLOW SOLDERING USING "PASTE IN HOLE" TECHNIQUES.
* SOLDER TAIL OPTION.

2 PHYSICAL:

INSULATOR:
MATERIAL: GLASS FILLED POLYESTER (PCT)
FLAMMABILITY: UL94V-0
COLOR: BLACK
CONTACT:
MATERIAL: COPPER ALLOY
PLATING:
UNDER PLATING: 100μ" [2.54μm] NICKEL-OVERALL
WIPING AREA: 30μ" [0.76μm] AVG. GOLD
SOLDER TAILS: TIN LEAD OR MATTE TIN (SEE ORDERING INFORMATION)
MARKINGS: 3M LOGO, PART IDENTIFICATION NUMBER AND ORIENTATION TRIANGLE

2 ELECTRICAL:

CURRENT RATING: 5.00A, 1 CONTACT POWERED
3.00A, 6 CONTACTS POWERED
1.75A, ALL CONTACTS POWERED
RATING CONDITIONS: EIA-364-070 METHOD 2, 30°C MAXIMUM TEMPERATURE RISE, 20% DERATED. REFERENCE APPROPRIATE 3M PRODUCT SPECIFICATION FOR DETAILED CURRENT DERATING CURVES.
INSULATION RESISTANCE: >1 X $10^9\Omega$ AT 500 V_{DC}
WITHSTANDING VOLTAGE: 1,000V_{RMS} AT SEA LEVEL

2 ENVIRONMENTAL:

TEMPERATURE RATING: -55°C TO 105°C
PROCESS RATING: 260°C, PER J-STD-020C, SINGLE PASS
MOISTURE SENSITIVITY LEVEL: 1 (PER J-STD-020C)

NOTES

1. REGULATORY INFORMATION: ROHS COMPLIANT. SEE THE REGULATORY INFORMATION APPENDIX (RIA) IN THE "ROHS COMPLIANCE" SECTION OF WWW.3MCONNECTORS.COM FOR COMPLIANCE INFORMATION.
2. IN THE EVENT OF CONFLICT BETWEEN THIS DATA AND THAT CONTAINED IN THE PRODUCT SPECIFICATION, THE PRODUCT SPECIFICATION TAKES PRECEDENT.
3. NOTCHES A & C WILL ACCOMODATE 3M POLARIZING KEY: N3518.
4. MOUNTING HARDWARE: FROM SOLDER SIDE OF PC BOARD USE #4-24 THREAD CUTTING SCREW (3M PART #3341-5) WITH Ø.116 [2.95] MOUNTING HOLE. FOR RIGHT ANGLE VERSION ONLY: #2-56 BOLT AND NUT (3M PART #3341-6) WITH Ø.106 [2.69] MOUNTING HOLE MAY BE USED.
5. THE RECOMMENDED PCB HOLE SIZE FOR THE KINKED TAIL POSITIONS ON THE .112 SOLDER TAIL CONNECTOR IS Ø.035±.002. (SEE K2 VERSION).

ORDERING INFORMATION

X3XXX-XXXXXX

N= HIGH TEMP BLACK (PCT)/(RB PLATING REQ'D)
BLANK= (UB PLATING)

3M PART NUMBER:
(SEE TABLE 1)

PIN CONFIGURATION:
5 = RIGHT ANGLE SOLDER TAILS
6 = STRAIGHT SOLDER TAILS

PLATING:
RB = 30μ" [0.76μm] GOLD AND 200μ" [5.08μm] MATTE TIN (APP. E1 & C1 APPLY)
UB = 30μ" [0.76μm] GOLD AND 200μ" [5.08μm] TIN LEAD (APP. E3 & C2 APPLY)

TAIL:
02 = FOR .062 [1.57] THICK BOARD
03 = FOR .094 TO .125 [2.39 TO 3.18] THICK BOARD
K2 = KINKED FOR .062 [1.57] THICK BOARD

LATCH/EJECTOR SYSTEM:
0 = NO LATCH/EJECTOR INSTALLED
2 = SHORT ROLL PIN LATCH/EJECTORS
3 = LONG ROLL PIN LATCH/EJECTORS

3M ELECTRONIC MATERIALS SOLUTIONS DIVISION
INTERCONNECT SOLUTIONS
http://www.3mconnectors.com

3M IS A TRADEMARK OF 3M COMPANY.
FOR TECHNICAL, SALES OR ORDERING INFORMATION CALL 800-225-5373

UL FILE NO: E68080

DIMENSIONS: INCHES [MM]
[MM] IS REF. ONLY

REV	ECO	ISSUE DATE AND DESCRIPTION	DRFT	CHKD
S	60056	MAR 06,2015 REVISE ORDERING NUMBER	JNC	RS
R	56068	JUL 25,2014 REVISED AND REDRAWN	JNC	RS

DESIGN REFERENCE | NEXT ASSEMBLY | ACCESS CODES

DRFT: CASTIGLIONE | DATE: JUL 25,2014 | MFG | DATE
CHKD | DATE | APPVL: R. SCHERER | DATE: SEP 05,2014

DIVISION: Interconnect Solutions | DIVISION CODE: EMSD

DO NOT SCALE DRAWING | SCALE 2/1

TOLERANCES EXCEPT AS NOTED
INCHES: .0 ±; .00 ±.01; .000 ±.005; .0000 ±
MILLIMETERS: 0 ±; .0 ±.3; .00 ±.13; .000 ±

THIRD ANGLE PROJECTION

INTERPRET PER ASME Y14.5 - 2009

MAX SURFACE ROUGHNESS: ☐ ALL SURFACES ☐ MARKED ONLY

ANGLES ±

3M Center, St. Paul, MN 55144

© 3M COPYRIGHT 2015
This document and the information it contains are 3M property and may not be reproduced or further distributed without 3M permission, or used or disclosed other than for 3M authorized purposes. All rights reserved.

TITLE: HEADER, 4-WALL, .100 X .100 LATCH/EJECTOR, STRAIGHT & RA

CAGE NUMBER | SIZE D | DRAWING NO. 78-5100-0772-3 | REV. S

MODEL: 3000 SERIES | DET. LISTS ☐ YES ☒ NO | SHT 1 OF 4

78-5100-0772-3 (DRAWING NUMBER) S (REVISION)

Imaged: S.1 3/6/2015 12:54 PM UTC-06:00

3M™ FOUR-WALL HEADER, 3000 SERIES

.100" X .100" LATCH/EJECTOR, STRAIGHT AND RIGHT ANGLE

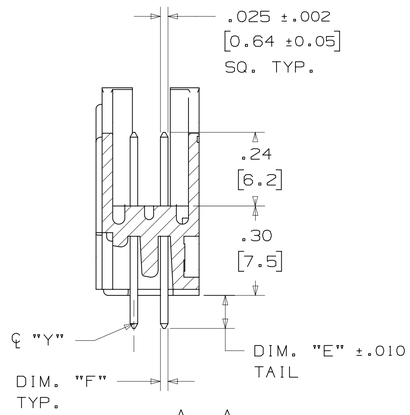

SECTION A - A
(STRAIGHT VERSION)

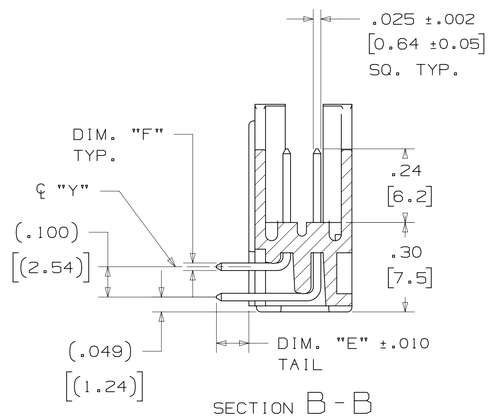

SECTION B - B
(RIGHT ANGLE VERSION)

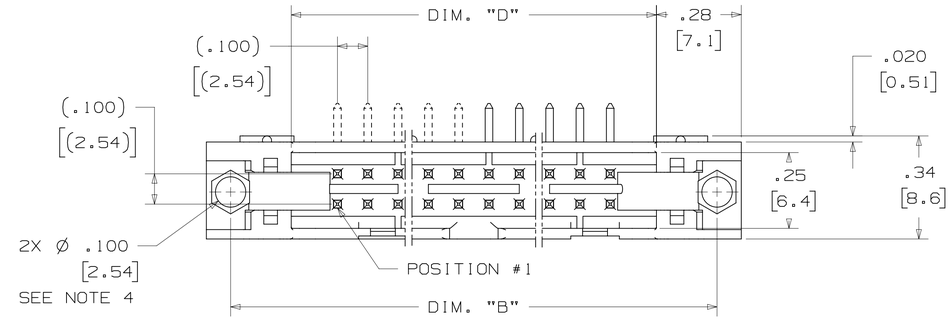

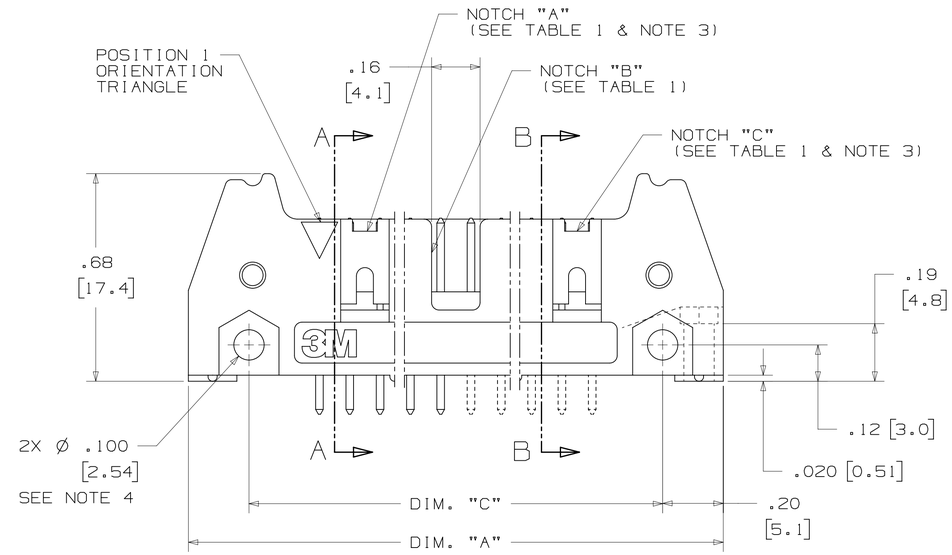

TABLE 1							
PIN QTY.	3M PART NUMBER	DIM. "A"	DIM. "B"	DIM. "C"	DIM. "D"	POLARIZING NOTCHES	PIN QTY.
06	3869	1.06 [27.0]	.905 [22.99]	.665 [16.89]	.51 [12.9]	B*	06
08	3889	1.16 [29.5]	1.005 [25.53]	.765 [19.43]	.61 [15.5]	B*	08
10	3793	1.26 [32.1]	1.105 [28.04]	.865 [21.97]	.71 [18.0]	BC	10
14	3314	1.46 [37.2]	1.305 [33.12]	1.065 [27.05]	.91 [23.1]	BC	14
16	3408	1.56 [39.7]	1.405 [35.66]	1.165 [29.59]	1.01 [25.6]	ABC	16
20	3428	1.76 [44.8]	1.604 [40.74]	1.365 [34.67]	1.21 [30.7]	ABC	20
24	3627	1.96 [49.9]	1.805 [45.82]	1.565 [39.75]	1.41 [35.8]	ABC	24
26	3429	2.06 [52.4]	1.905 [48.36]	1.665 [42.29]	1.51 [38.3]	ABC	26
30	3440	2.26 [57.5]	2.105 [53.44]	1.865 [47.37]	1.71 [43.4]	ABC	30
34	3431	2.46 [62.6]	2.305 [58.52]	2.065 [52.45]	1.91 [48.5]	ABC	34
40	3432	2.76 [70.2]	2.605 [66.14]	2.365 [60.07]	2.21 [56.1]	ABC	40
50	3433	3.26 [82.9]	3.105 [78.84]	2.865 [72.77]	2.71 [68.8]	ABC	50
60	3372	3.76 [95.6]	3.605 [91.54]	3.365 [85.47]	3.21 [81.5]	ABC	60
64	3764	3.96 [100.7]	3.805 [96.62]	3.565 [90.55]	3.41 [86.6]	ABC	64

* AVAILABLE WITHOUT CENTER NOTCH B. CONTACT 3M

TABLE 2						
3M PART NUMBER SUFFIX	CONTACT TAIL	DIM. "E"	PIN CROSS SECTION			DIM. "G"
			DIM. "F"	DIAGONALS	CORNER RADII	
-5XX2	.062 [1.57] THICK PC BOARD	.112 [2.84]	.0245+/-.0005 [.622]	.028+/-.001 [.71]	.0075 REF. [.191]	.035+/-.003 [.89] SEE NOTE 5
-6XX2						
-5X03	.094 [2.39] TO .125 [3.18] THICK PC BOARD	.155 [3.94]	.0245+/-.0005 [.622]	.028+/-.001 [.71]	.0075 REF. [.191]	.035+/-.003 [.89]
-6X03						

REV	ECO	ISSUE DATE AND DESCRIPTION	DRFT	CHKD
S	60056	MAR 06,2015 REVISE ORDERING NUMBER	JNC	RS
R	56068	JUL 25,2014 REVISED AND REDRAWN	JNC	RS

DESIGN REFERENCE | NEXT ASSEMBLY | ACCESS CODES

DRFT CASTIGLIONE DATE JUL 25,2014 | MFG | DATE

CHKD | DATE | APPVL R. SCHERER DATE SEP 05,2014

DIVISION Interconnect Solutions | DIVISION CODE EMSD

DO NOT SCALE DRAWING | SCALE 4 1

TOLERANCES EXCEPT AS NOTED
INCHES
.0 ±
.00 ± .01
.000 ± .005
.0000 ±
MILLIMETERS
0 ±
.0 ± .3
.00 ± .13
.000 ±
ANGLES ±

THIRD ANGLE PROJECTION

INTERPRET PER ASME Y14.5 - 2009

MAX SURFACE ROUGHNESS ☐ ALL SURFACES ☐ MARKED ONLY

3M Center St. Paul, MN 55144

© 3M COPYRIGHT 2015
This document and the information it contains are 3M property and may not be reproduced or further distributed without 3M permission, or used or disclosed other than for 3M authorized purposes. All rights reserved.

TITLE HEADER, 4-WALL, .100 X .100 LATCH/EJECTOR, STRAIGHT & RA

CAGE NUMBER | SIZE D | DRAWING NO. 78-5100-0772-3 | REV. S

MODEL 3000 SERIES | DET LISTS ☐ YES ☒ NO | SHT 2 OF 4

78-5100-0772-3 DRAWING NUMBER | S REVISION

Imaged: S.1 3/6/2015 12:54 PM UTC-06:00

3M™ FOUR-WALL HEADER, 3000 SERIES

.100" X .100" LATCH/EJECTOR, STRAIGHT AND RIGHT ANGLE

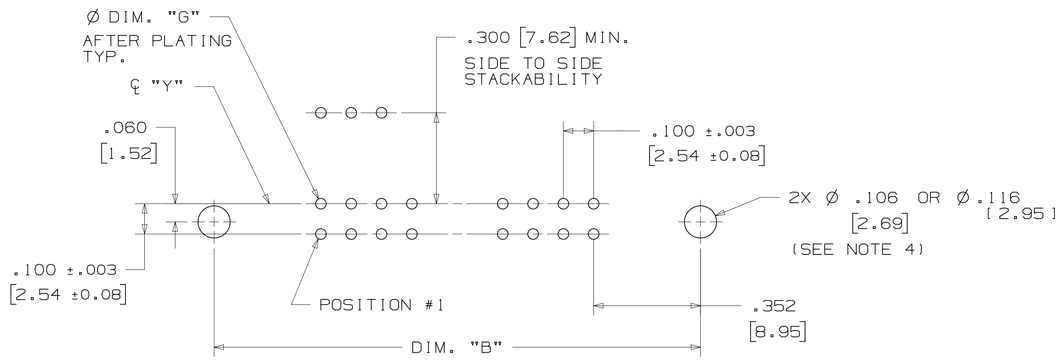

RECOMMENDED MOUNTING HOLE PATTERN

(STRAIGHT VERSION)

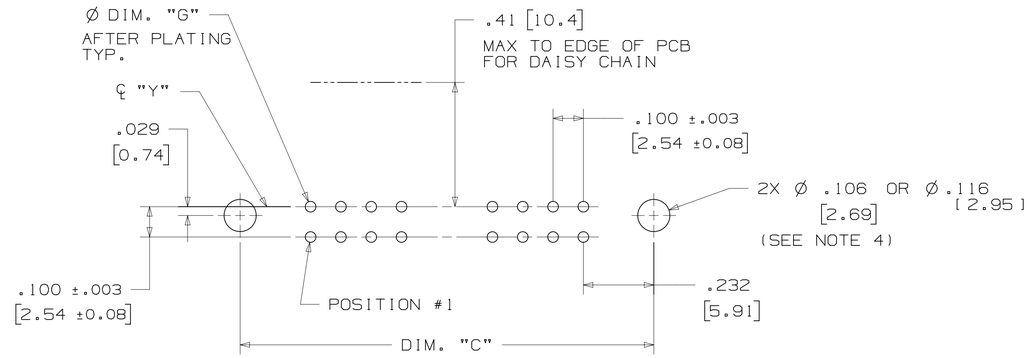

RECOMMENDED MOUNTING HOLE PATTERN

(RIGHT ANGLE VERSION)

PART CUSTOMIZATION

THIS SPEC SHEET DETAILS OUR STANDARD OFFERING.

3M HAS SEVERAL CAPABILITIES THAT CAN PROVIDE A PART TAILORED TO YOUR SPECIFIC NEEDS. ASK YOUR 3M SALES REPRESENTATIVE OR CUSTOMER SERVICE FOR MORE DETAILS.

BOTH SNAP-IN AND ROLL PIN LATCHES MAY BE ORDERED SEPARATELY. SNAP-IN AND ROLL PIN STYLE LATCHES ARE DIMENSIONALLY AND FUNCTIONALLY EQUIVALENT. IF ORDERING SNAP-IN OR ROLL PIN STYLE LATCHES SEPARATELY, PLEASE USE THE BELOW CHART.

MATERIAL	SHORT LATCH	LONG LATCH	LATCH STYLE	COLOR
HIGH TEMP. (PCT)	N3505-2B	N3505-3B	ROLL PIN	BLACK
HIGH TEMP (PPA)	N3505-30B	N3505-31B	SNAP-IN	BLACK

* SELECTIVE PIN REMOVAL (ATA OR OTHER COMPATABILITY)
* WIRE WRAP TAILS STYLE

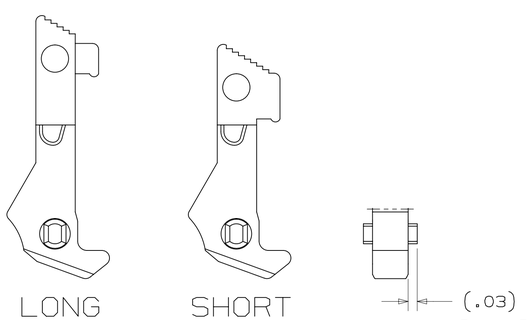

SNAP-IN LATCHES

NOTE:
SNAP-IN LATCHES CAN ONLY BE ORDERED SEPARATELY AND ARE THE CUSTOMERS RESPONSIBILITY TO INSTALL.

POLARIZING POST

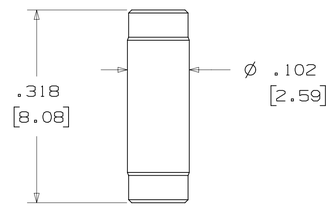

3M PART NO.	MATERIAL	COLOR
3201-4	LCP	BLACK

NOTE:
INSERT POST INTO ONE MOUNTING HARDWARE HOLE ON BOTTOM OF HEADER. SET POST TO PROTRUDE .115 [2.92]

K2 OPTION

2500 & 3000 SERIES SHROUDED HEADER					
TOTAL NO. OF PINS	NO. OF TAILS KINKED	POSITIONS KINKED			
10	4	3	4	7	8
14	4	3	4	11	12
16	4	3	4	13	14
20	4	3	4	17	18
24	4	3	4	21	22
26	4	3	4	23	24
30	4	5	6	25	26
34	4	7	8	27	28
36	4	7	8	27	28
40	4	7	8	33	34
50	4	7	8	43	44
60	4	11	12	49	50
64	4	11	12	53	54

KINKED TAIL DETAIL:
- KINK IS LOCATED .05" BELOW BOTTOM SURFACE OF PLASTIC.
- EXTERNAL RADIUS OF KINK TOWARD PART CENTERLINE.

POLARIZING KEYS

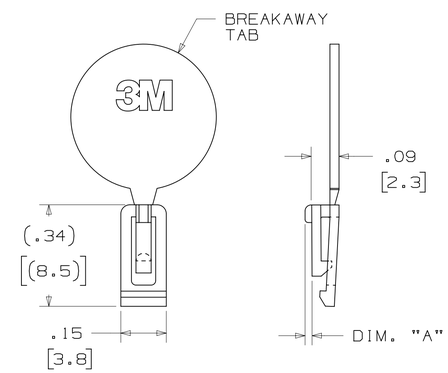

3M PART NO.	MATERIAL	COLOR	DIM. "A"
N3518	LCP	BLACK	.02

NOTE:
#2216 B/A SCOTCHWELD CAN BE USED TO ADHERE KEYS.

REV	ECO	ISSUE DATE AND DESCRIPTION	DRFT	CHKD
S	60056	MAR 06,2015 REVISE ORDERING NUMBER	JNC	RS
R	56068	JUL 25,2014 REVISED AND REDRAWN	JNC	RS

DESIGN REFERENCE NEXT ASSEMBLY

ADDENDUM CODES

DRFT CASTIGLIONE DATE JUL 25,2014 MFG DATE

CHKD DATE APPVL R. SCHERER DATE SEP 05,2014

DIVISION Interconnect Solutions DIVISION CODE EMSD

DO NOT SCALE DRAWING SCALE 4/1

TOLERANCES EXCEPT AS NOTED

INCHES .0 ± .00 ± .01 .000 ± .005 .0000 ±

THIRD ANGLE PROJECTION

INTERPRET PER ASME Y14.5 - 2009

MILLIMETERS 0 ± .0 ± .3 .00 ± .13 .000 ±

MAX SURFACE ROUGHNESS ☐ ALL SURFACES ☐ MARKED ONLY

ANGLES ±

© 3M COPYRIGHT 2015
This document and the information it contains are 3M property and may not be reproduced or further distributed without 3M permission, or used or disclosed other than for 3M authorized purposes. All rights reserved.

3M Center St. Paul, MN 55144

TITLE HEADER, 4-WALL, .100 X .100 LATCH/EJECTOR, STRAIGHT & RA

CAGE NUMBER SIZE D DRAWING NO. 78-5100-0772-3 REV. S

MODEL 3000 SERIES DET. LISTS ☐ YES ☒ NO SHT 3 OF 4

78-5100-0772-3 DRAWING NUMBER S REVISION

Imaged: S.1 3/6/2015 12:54 PM UTC-06:00

3M™ FOUR-WALL HEADER, 3000 SERIES

.100" X .100" LATCH/EJECTOR, STRAIGHT AND RIGHT ANGLE

MOUNTING HARDWARE

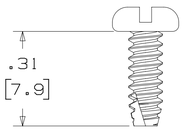

3341-5

(INSTALL FROM BOTTOM OF BOARD)

PANHEAD THREAD CUTTING SCREW:
#4-24 X 5/16"
TYPE: USA STD BT, FEDERAL BG
MATERIAL: STAINLESS STEEL

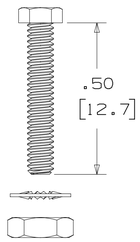

3341-6

HEX HEAD BOLT, NUT AND WASHER:
BOLT - #2-56 X 1/2"
MATERIAL: STAINLESS STEEL

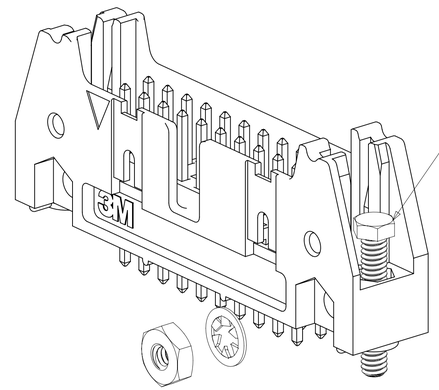

STRAIGHT VERSION INSTALL
(MUST BE INSERTED PRIOR TO
LATCH INSTALL)

RIGHT ANGLE VERSION INSTALL

3341-6

#2-56 NUT AND BOLT
TORQUE FOR EACH BOLT: 1.25 - 3.125 INCH LBS.

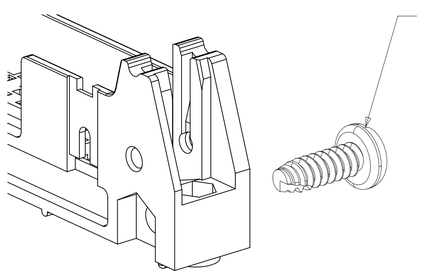

#4-24 TYPE BT SELF THREADING SCREW
WHEN USING LATCHES, MAXIMUM LENGTH
OF SCREW IS .250 INCHES PLUS
THICKNESS OF THE BOARD.
TORQUE FOR EACH SCREW IS 3-5 INCH LBS.

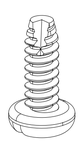

3341-5

REV	ECO	ISSUE DATE AND DESCRIPTION	DRFT	CHKD
S	60056	MAR 06,2015 REVISE ORDERING NUMBER	JNC	RS
R	56068	JUL 25,2014 REVISED AND REDRAWN	JNC	RS

DESIGN REFERENCE | NEXT ASSEMBLY

ACCESS CODES

DRFT CASTIGLIONE DATE JUL 25,2014 | MFG | DATE

CHKD | DATE | APPVL R. SCHERER DATE SEP 05,2014

DIVISION: Interconnect Solutions | DIVISION CODE: EMSD

DO NOT SCALE DRAWING | SCALE 4/1

THIRD ANGLE PROJECTION

INTERPRET PER ASME Y14.5 - 2009

MAX SURFACE ROUGHNESS: ☐ ALL SURFACES ☐ MARKED ONLY

TOLERANCES EXCEPT AS NOTED

INCHES
.0 :
.00 : .01
.000 : .005
.0000 :

MILLIMETERS
0 :
.0 : .3
.00 : .13
.000 :

ANGLES ±

© 3M COPYRIGHT 2015
This document and the information it contains are 3M property and may not be reproduced or further distributed without 3M permission, or used or disclosed other than for 3M authorized purposes. All rights reserved.

3M Center, St. Paul, MN 55144

TITLE: HEADER, 4-WALL, .100 X .100 LATCH/EJECTOR, STRAIGHT & RA

CAGE NUMBER | SIZE D | DRAWING NO. 78-5100-0772-3 | REV. S

MODEL 3000 SERIES | DET. LISTS ☐ YES ☒ NO | SHT 4 OF 4

78-5100-0772-3 DRAWING NUMBER | S REVISION

Imaged: S.1 3/6/2015 12:54 PM UTC-06:00