背 景 BACK GROUND
SWC103029B

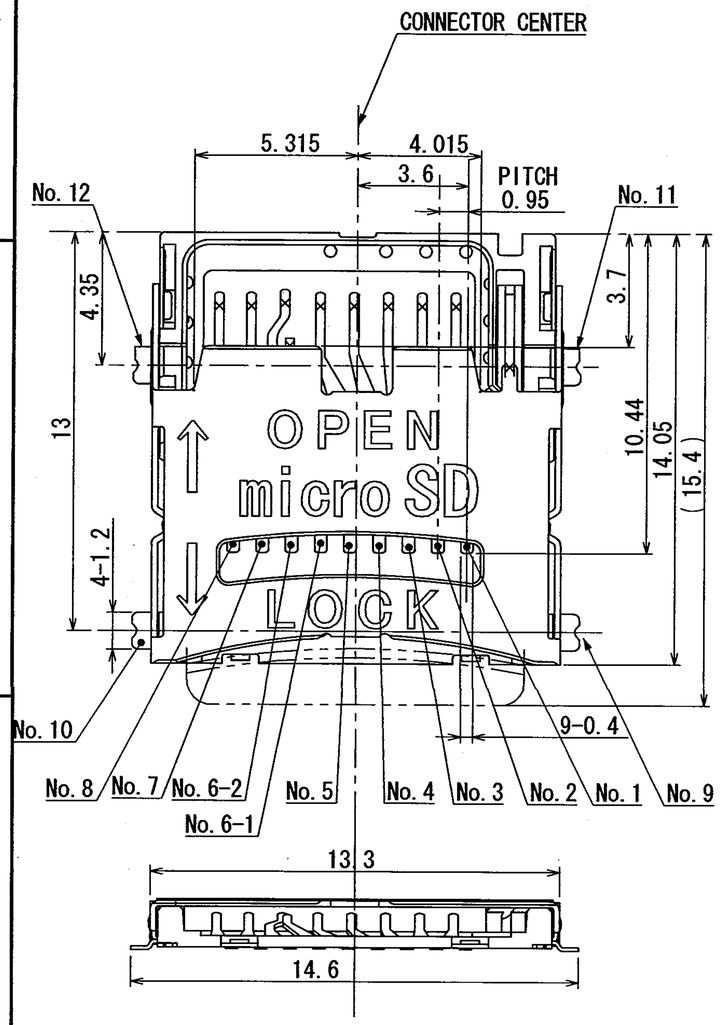

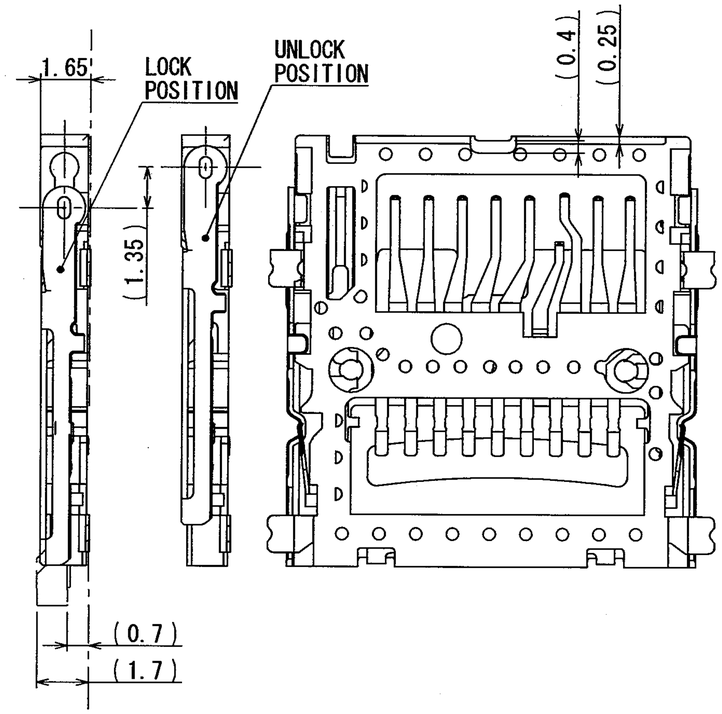

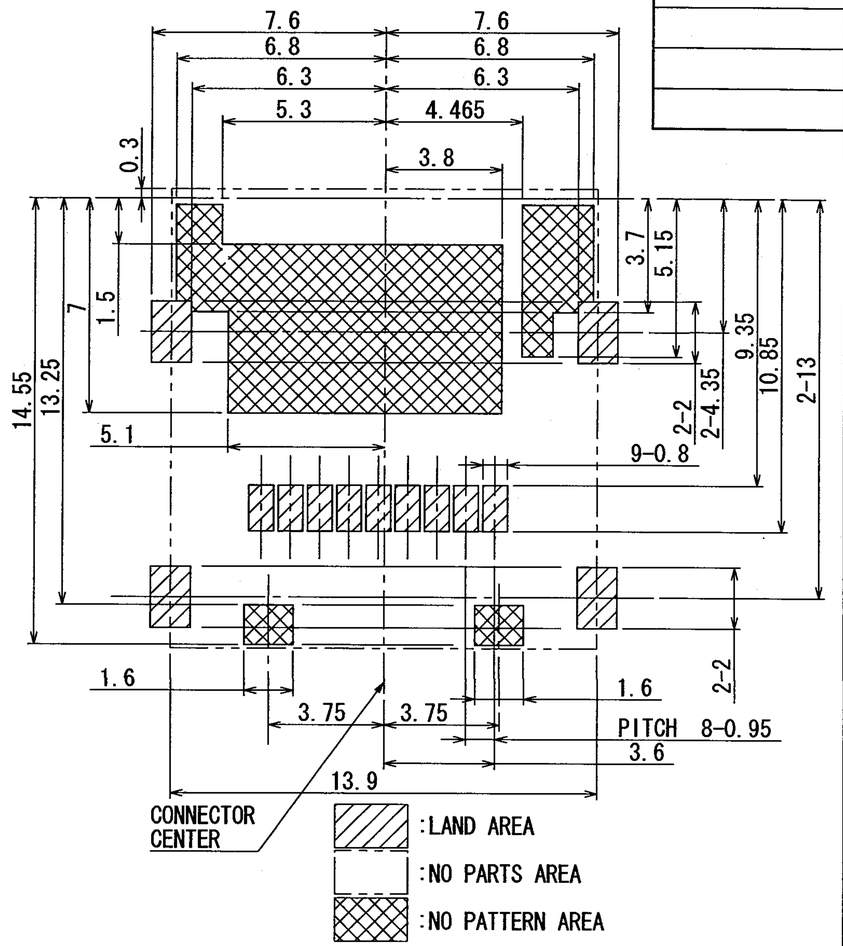

RECOMMENDED P. C. BOARD LAYOUT
(MOUNTING FACE SIDE)
ALL TOLERANCE NOT DESCRIBED ARE ±0.05

PIN ASSIGNMENTS		
CONNECTOR TERMINAL No.	PIN No.	PIN LAYOUT
No.1	microSD NO.1	DAT2
No.2	microSD NO.2	CD/DAT3
No.3	microSD NO.3	CMD
No.4	microSD NO.4	VDD
No.5	microSD NO.5	CLK
No.6-1	microSD NO.6	VSS
No6-2	microSD NO.6	CARD DETECT
No.7	microSD NO.7	DAT0
No.8	microSD NO.8	DAT1

COMPOSITION OF DETECTION
(COVER AND CARD)

CARD DETECT (SW-1)

No. 6-1 Vss (GND) — CARD DETECTION/SWITCH — No. 6-2 (CARD DETECT)

CARD INSTALLATION : ON
NON CARD : OFF

COVER DETECT (SW-2)

No. 9, No. 10 (GND) — COVER/SWITCH — No. 11, No. 12 (COVER DETECT)

LOCK : ON
UNLOCK : OFF

WHEN BECOMING SW-1 AND SW-2 ON CARD INSTALLATION

2. All TERMINALS COPLANARITY : 0.1 MAX.
NOTE 1. THIS PRODUCT IS STANDARD MOUNT TYPE.

TOLERANCE UNLESS OTHERWISE SPEC.	
BASIC DIMENSION	TOLERANCE
10 UNDER	±0.3
ABOVE 10 TO 100	±0.5
ANGLE	±3°

SYMB	DATE	APPD	CHKD	DSGD

ALPS ELECTRIC CO., LTD.

DSGD. Mar. 30. 2010 H. Sasaki	SCALE —	MODEL No. SCHB1B0201
CHKD. Mar. 30. 2010		TITLE PRODUCT DRAWING (1/2)
APPD. Mar. 30. 2010	UNIT mm	DOCUMENT NO. SCHB1B0201, AE12, 003

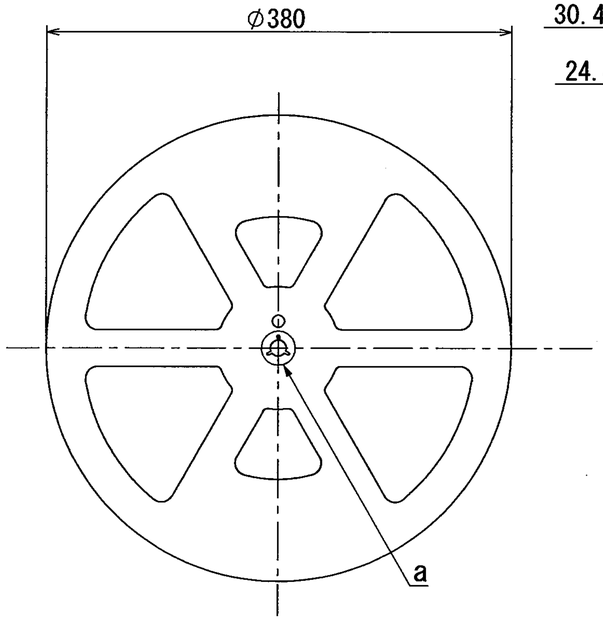

REEL CORE (1:5)

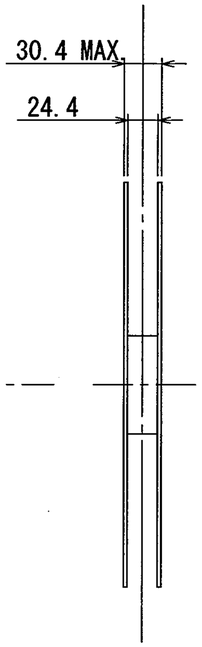

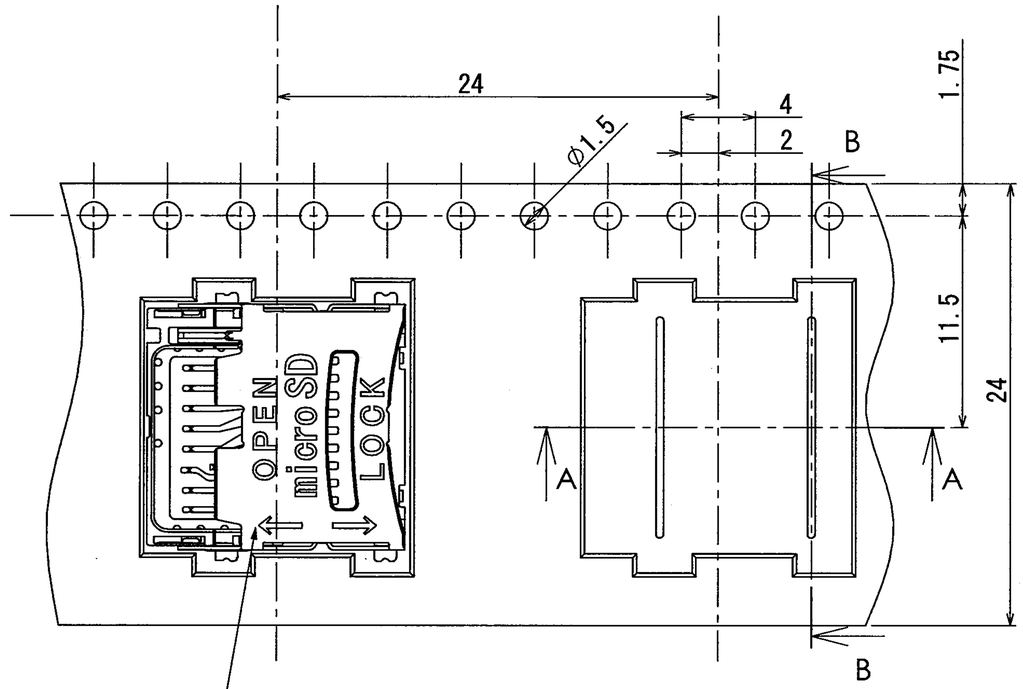

PRODUCT PACKING STATE
COVER MUST BE AT LOCKED POSITION.

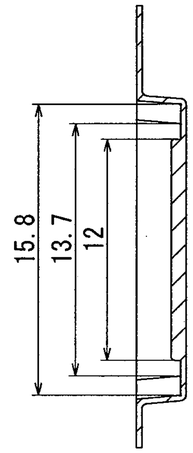

SEC. B-B

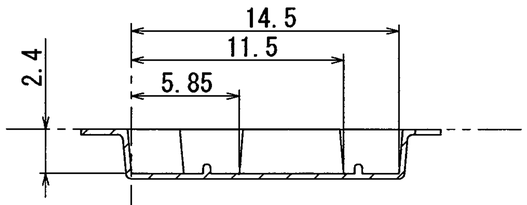

SEC. A-A

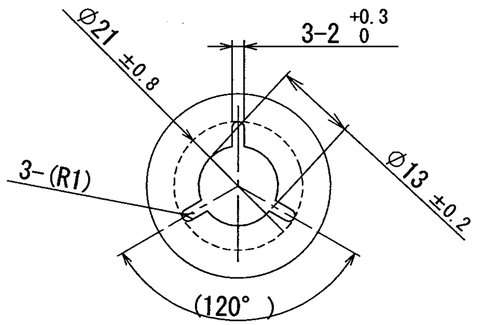

DETAIL ⓐ (1 : 1)

NOTE 1. SPECIFICATION OF TAPING :TAPE-S-018

TOLERANCE UNLESS OTHERWISE SPEC.	
0＜L≦10	±0.3
10＜L≦100	±0.5
ANGULAR DIMENSION	±3°

SYMB	DATE	APPD	CHKD	DSGD

ALPS ELECTRIC CO., LTD.

DSGD. Mar. 30. 2010 H. Sasaki	SCALE 1/1	MODEL No. SCHB1B0201	
CHKD. Mar. 30. 2010		TITLE (TAPING) PRODUCT DRAWING	
APPD. Mar. 30. 2010 Y. Osaka	UNIT mm	DOCUMENT NO. SCHB1B0201, AE22, 003	(2/2)

X-ON Electronics

Largest Supplier of Electrical and Electronic Components

Click to view similar products for Standard Card Edge Connectors ***category:***

Click to view products by ALPS ***manufacturer:***

Other Similar products are found below :

6565204-6 PKC-156 1437274-4 147889-1 1489165-4 EBT156-12B1X EBT15622B2X EBT156-22R2W 1-582587-1 1-582589-1 2-6437275-9 284-0102-12100 306022901000000 307-012-502-202 307-024-526-201 307-056-520-300 307-080-526-208 1926088-2 245-062-520-350 287-0032-12101 306-010-500-112 306-028-525-102 306-240-318 307-036-502-202 307-036-521-301 307-072-526-202 345-060-559-303 368-004-520-201 392-008-559-201 534671-1 5-530501-5 341-240-317 345-029-520-300 345-030-500-301 345-044-500-300 345-220-058 346-240-318 357-030-526-201 387-012-523-300 395-044-520-300 395-100-524-300 50-12B-10 50-6SN-5 09-07-2032 10035388-106LF 10035388-802LF 10115859-011LF 10122859-009LF 101269333204245CLF 10127905-B04B24BLF