Data Sheet

Customer：	
Product :	Thin Film Precision Chip Resistor - AR Series
Size:	0201/0402/0603/0805/1206/1210/2010/2512
Issued Date:	14-Dec-16
Edition :	REV.E

RoHS Compliant

VIKING TECH CORPORATION
光頡科技股份有限公司

No.70, Guangfu N. Rad.,
Hsin Chu Industrial Park,
Hukou Hsiang, Hsin Chu Hsien,
303, Taiwan
TEL:886-3-5972931
FAX:886-3-5972935•886-3-5973494
E-mail:sales@viking.com.tw

VIKING TECH CORPORATION KAOHSIUNG BRANCH
光頡科技股份有限公司高雄分公司

No.248-3, Sin-Sheng Rd., Cian-Jhen Dist., Kaohsiung,
806, Taiwan

TEL:886-7-8217999
FAX:886-7-8228229
E-mail:sales@viking.com.tw

WUXI TMTEC CO., LTD.
無錫泰銘電子有限公司

No.1A,(Xixia Road),Machinery & Industry Park,
National Hi-Tech Industrial Development Zone of
Wuxi, Wuxi, Jiangsu Province, China
Zip Code:214028
TEL:86-510-85203339
FAX:86-510-85203667•86-510-85203977
E-mail:wuxisales@tmtec.com.tw

Produced by (QC)	Checked (QC)	Approved by (QC)	Prepared by (Sales)	Accepted by (Customer)
14-Dec-16	14-Dec-16	14-Dec-16	14-Dec-16	
Chun	***Ben Chang***	***Ben Chang***		

Thin Film Precision Chip Resistor
(AR Series)

Features

- Advanced thin film technology
- Very tight tolerance down to ±0.01%
- Extremely low TCR down to ±2PPM/°C
- Wide resistance range 1ohm ~ 3Mega ohm
- Miniature size 0201 available

Applications

- Medical Equipment
- Testing / Measurement Equipment
- Printer Equipment
- Automatic Equipment Controller
- Converters
- Communication Device, Cell Phone, GPS, PDA

Construction

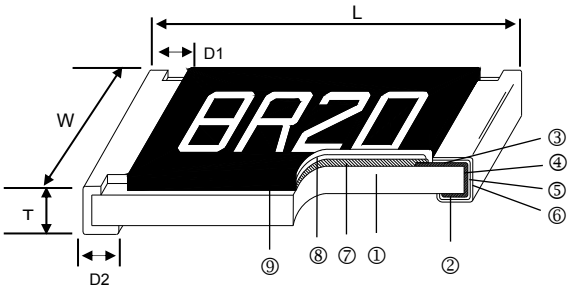

①	Alumina Substrate	④	Edge Electrode	⑦	Resistor Layer
②	Bottom Electrode	⑤	Barrier Layer	⑧	Overcoat
③	Top Electrode	⑥	External Electrode	⑨	Marking

Dimensions

Unit: mm

Type	Size (Inch)	L	W	T	D1	D2	Weight (g) (1000pcs)
AR01	0201	0.58±0.05	0.29±0.05	0.23±0.05	0.12±0.05	0.15±0.05	0.14
AR02	0402	1.00±0.05	0.50±0.05	0.30±0.05	0.20±0.10	0.20±0.10	0.54
AR03	0603	1.55±0.10	0.80±0.10	0.45±0.10	0.30±0.20	0.30±0.20	1.83
AR05	0805	2.00±0.15	1.25±0.15	0.55±0.10	0.30±0.20	0.40±0.20	4.71
AR06	1206	3.05±0.15	1.55±0.15	0.55±0.10	0.42±0.20	0.35±0.25	9.02
AR13	1210	3.10±0.15	2.40±0.15	0.55±0.10	0.40±0.20	0.55±0.25	10
AR10	2010	4.90±0.15	2.40±0.15	0.55±0.10	0.60±0.30	0.50±0.25	23.61
AR12	2512	6.30±0.15	3.10±0.15	0.55±0.10	0.60±0.30	0.50±0.25	38.06

Part Numbering

AR	03	T	T	B	Y	1001	N
Product Type	Dimensions (L×W)	Resistance Tolerance	Packaging Code	TCR (PPM/°C)	Power Rating	Resistance	Marking Code
	01: 0201 02: 0402 03: 0603 05: 0805 06: 1206 13: 1210 10: 2010 12: 2512	T: ±0.01% A: ±0.05% B: ±0.1% C: ±0.25% D: ±0.5% F: ±1%	T: Taping Reel B: Bulk	X: ±2 O:±3 S: ±5 B: ±10 N: ±15 C: ±25 D: ±50	: Standard Y: 1/16W X: 1/10W W: 1/8W M: 1/6W P: 1/5W V: 1/4W O: 1/3W U: 1/2W Q: 3/4W T: 1W	0010: 1Ω 4R70: 4.7Ω 1001: 1KΩ 1004: 1MΩ	: Standard Marking for E96 / E24 N: No Marking

■Derating Curve

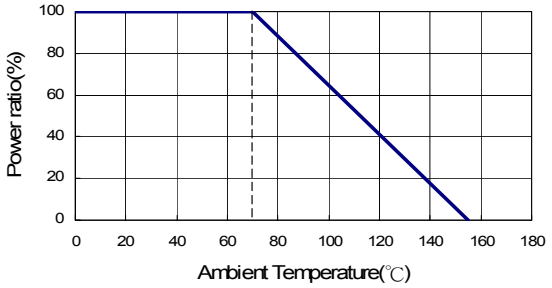

■Standard Electrical Specifications

Item / Type	Power Rating at 70°C	Operating Temp. Range	Max. Operating Voltage	Max. Overload Voltage	Resistance Range ±0.05%	Resistance Range ±0.1%	Resistance Range ±0.25%	Resistance Range ±0.5%	Resistance Range ±1%	TCR (PPM/°C)
AR01 (0201)	1/32W	-55 ~ +155°C	15V	30V	—				49.9Ω - 4.99KΩ	±25
									49.9Ω - 33KΩ	±50
AR02 (0402)	1/16W	-55 ~ +155°C	25V	50V	49.9Ω - 12KΩ	10Ω - 255KΩ	4.7Ω – 511KΩ			±25 ±50
AR03 (0603)	1/16W	-55 ~ +155°C	50V	100V	4.7Ω -332KΩ	4.7Ω - 1MΩ	1Ω - 1MΩ			±25 ±50
AR05 (0805)	1/10W	-55 ~ +155°C	100V	200V	4.7Ω -1MΩ	4.7Ω - 2MΩ	1Ω - 2MΩ			±25 ±50
AR06 (1206)	1/8W	-55 ~ +155°C	150V	300V	4.7Ω - 1MΩ	4.7Ω - 2.49MΩ	1Ω - 2.49MΩ			±25 ±50
AR13 (1210)	1/4W									
AR10 (2010)	1/4W	-55 ~ +155°C	150V	300V	4.7Ω - 1MΩ	4.7Ω - 3MΩ	1Ω - 3MΩ			±25 ±50
AR12 (2512)	1/2W									

■Lower Resistance:1~10Ω

■Special Electrical Specifications

Item / Type	Power Rating at 70°C	Operating Temp. Range	Max. Operating Voltage	Max. Overload Voltage	Resistance Range ±0.01%	Resistance Range ±0.05%	Resistance Range ±0.1%	Resistance Range ±0.25%	Resistance Range ±0.5%	Resistance Range ±1%	TCR (PPM/°C)
AR02 (0402)	1/16W	-55 ~ +155°C	25V	50V	49.9Ω - 4.99KΩ			—			±2 ±3
					49.9Ω - 20KΩ						±5
					49.9Ω - 20KΩ		49.9Ω - 100KΩ				±10
							49.9Ω -69.8KΩ				±15
AR03 (0603)	1/16W	-55 ~ +155°C	50V	100V	24.9Ω - 15KΩ			—			±2 ±3
					24.9Ω - 60KΩ						±5
					24.9Ω - 100KΩ	4.7Ω- 332KΩ	4.7Ω - 511KΩ				±10 ±15
AR05 (0805)	1/10W	-55 ~ +155°C	100V	200V	24.9Ω - 30KΩ			—			±2 ±3
					24.9Ω - 150KΩ						±5
					24.9Ω - 200KΩ	4.7Ω – 1MΩ					±10 ±15
AR06 (1206)	1/8W	-55 ~ +155°C	150V	300V	24.9Ω - 49.9KΩ			—			±2 ±3
					24.9Ω - 300KΩ						±5
					24.9Ω - 499KΩ	4.7Ω – 1.5MΩ					±10 ±15
AR13 (1210)	1/ 4W	-55 ~ +155°C	150V	300V	24.9Ω - 49.9KΩ			—			±2 ±3
					24.9Ω - 300KΩ						±5
					24.9Ω - 499KΩ	4.7Ω - 1MΩ					±10 ±15
AR10 (2010)	1/4W	-55 ~ +155°C	150V	300V	24.9Ω - 100KΩ			—			±2 ±3
					24.9Ω - 300KΩ						±5
					24.9Ω - 499KΩ	4.7Ω - 1MΩ					±10 ±15
AR12 (2512)	1/2W	-55 ~ +155°C	150V	300V	24.9Ω - 100KΩ			—			±2 ±3
					24.9Ω - 300KΩ						±5
					24.9Ω - 499KΩ	4.7Ω - 1MΩ					±10 ±15

■High Power Rating Electrical Specifications

Type \ Item	Power Rating at 70°C	Operating Temp. Range	Max. Operating Voltage	Max. Overload Voltage	Resistance Range ±0.01%	Resistance Range ±0.05%	Resistance Range ±0.1%	Resistance Range ±0.25%	Resistance Range ±0.5%	Resistance Range ±1%	TCR (PPM/°C)
AR02 (0402)	1/10W	-55 ~ +155°C	50V	100V	49.9Ω - 4.99KΩ			—			±2 ±3
					49.9Ω - 4.99KΩ						±5
					49.9Ω - 12KΩ		49.9Ω - 60KΩ				±10
							49.9Ω -69.8KΩ				±15
					—	49.9Ω - 12KΩ	10Ω - 255KΩ	4.7Ω~255KΩ			±25 ±50
AR03 (0603)	1/10W	-55 ~ +155°C	75V	150V	24.9Ω - 15KΩ			—			±2 ±3
					24.9Ω - 15KΩ						±5
					24.9Ω - 100KΩ	4.7Ω - 332KΩ	4.7Ω - 332KΩ				±10 ±15
							4.7Ω -1MΩ				±25 ±50
	1/6W	-55 ~ +155°C	100V	150V	—	10Ω - 332KΩ					±25 ±50
AR05 (0805)	1/8W	-55 ~ +155°C	150V	300V	24.9Ω - 30KΩ			—			±2 ±3
					24.9Ω - 30KΩ						±5
					24.9Ω - 200KΩ	4.7Ω -511KΩ	4.7Ω -511KΩ				±10
							4.7Ω - 1MΩ				±15
							4.7Ω - 1MΩ	1Ω - 1MΩ			±25 ±50
	1/4W	-55 ~ +155°C	150V	300V	—	10Ω - 499KΩ					±25 ±50
AR06 (1206)	1/4W	-55 ~ +155°C	200V	400V	24.9Ω - 49.9KΩ			—			±2 ±3
					24.9Ω - 49.9KΩ						±5
					24.9Ω - 499KΩ	4.7Ω - 1MΩ					±10 ±15 ±25 ±50
	1/3W	-55 ~ +155°C	200V	400V	—	10Ω ~1MΩ					±25 ±50
AR13 (1210)	1/ 3W	-55 ~ +155°C	200V	400V	24.9Ω – 49.9KΩ			—			±2 ±3
					24.9Ω – 49.9KΩ						±5
					24.9Ω - 499KΩ	4.7Ω - 1MΩ					±10 ±15 ±25 ±50
AR10(2010)	1/3W	-55 ~ +155°C	200V	400V	24.9Ω - 49.9KΩ			—			±2 ±3
					24.9Ω - 49.9KΩ						±5
					24.9Ω - 499KΩ	4.7Ω - 1MΩ					±10 ±15 ±25 ±50
AR12(2512)	3/4W	-55 ~ +155°C	200V	400V	24.9Ω - 2KΩ	4.7Ω – 2KΩ		1Ω – 2KΩ			±10 ±15 ±25 ±50
	1W	-55 ~ +155°C	200V	400V	—		4.7Ω – 100Ω	1Ω – 100Ω			±25 ±50

Operating Voltage=$\sqrt{(P*R)}$ or Max. operating voltage listed above, whichever is lower.
Overload Voltage=2.5*$\sqrt{(P*R)}$ or Max. overload voltage listed above, whichever is lower.
■Viking is capable of manufacturing the optional spec based on customer's requirement.
(Lower Resistance:1~10Ω ; High Power Rating)

■Environmental Characteristics

Item	Requirement		Test Method
	Tol. ≦ 0.05%	Tol. > 0.05%	
Temperature Coefficient of Resistance (T.C.R.)	As Spec.		**MIL-STD-202 Method 304** +25/-55/+25/+125/+25°C
Short Time Overload	ΔR±0.05%	ΔR±0.2%	**JIS-C-5201-1 5.5** RCWV*2.5 or Max. overload voltage whichever is lower for 5 seconds
	ΔR±0.2% for high power rating		
Insulation Resistance	>9999 MΩ		**MIL-STD-202 Method 302** Apply 100V_{DC} for 1 minute
Endurance	ΔR±0.05%	ΔR±0.2%	**MIL-STD-202 Method 108A** 70±2°C, RCWV for 1000 hrs with 1.5 hrs "ON" and 0.5 hrs "OFF"
	>7kΩ ΔR±0.5%		
	ΔR±0.5% for high power rating		
Damp Heat with Load	ΔR±0.05%	ΔR±0.3%	**MIL-STD-202 Method 103B** 40±2°C, 90~95% R.H. RCWV for 1000 hrs with 1.5 hrs "ON" and 0.5 hrs "OFF"
	ΔR±0.5% for high power rating		
Bending Strength	ΔR±0.05%	ΔR±0.1%	**JIS-C-5201-1 6.1.4** Bending amplitude 3 mm for 10 seconds
Solderability	95% min. coverage		**MIL-STD-202 Method 208H** 245±5°C for 3 seconds
Resistance to Soldering Heat	ΔR±0.05%	ΔR±0.1%	**MIL-STD-202 Method 210E** 260±5°C for 10 seconds
Dielectric Withstand Voltage	By Type		**MIL-STD-202 Method 301** Max. overload voltage for 1 minute
Thermal Shock	ΔR±0.05%	ΔR±0.2%	**MIL-STD-202 Method 107G** -55°C ~150°C, 100 cycles
Low Temperature Operation	ΔR±0.05%	ΔR±0.2%	**JIS-C-5201-1 7.1** 1 hour, -65°C, followed by 45 minutes of RCWV
	ΔR±0.5% for high power rating		
High Temperature Exposure	ΔR±0.5%		**MIL-STD-202 Method 108** at +155°C for 1000 hrs

RCWV(Rated continuous working voltage)= $\sqrt{(P*R)}$ or Max. Operating voltage whichever is lower

■**Storage Temperature: 15~28°C; Humidity < 80%RH**

■Soldering Condition

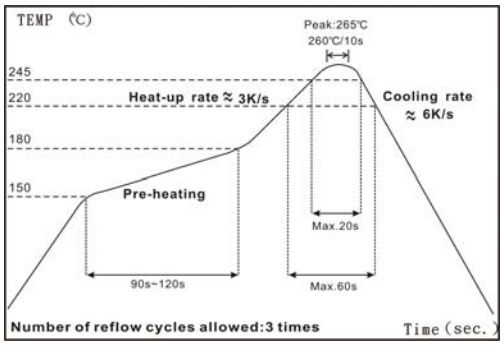

IR Reflow Soldering

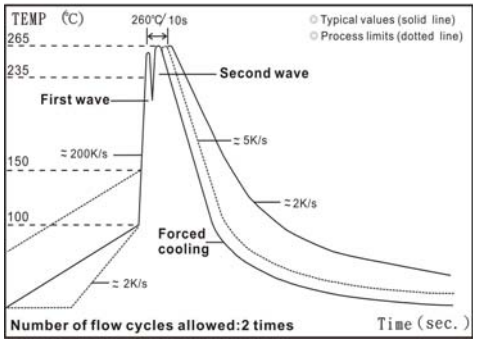

Wave Soldering (Flow Soldering)

(1) Time of IR reflow soldering at maximum temperature point 260°C：10s

(2) Time of wave soldering at maximum temperature point 260°C：10s

(3) Time of soldering iron at maximum temperature point 410°C：5s

■Marking

0603 3digit marking

3digit marking for Example: 14C=13K7Ω 13C=13K3Ω

68B=4K99Ω 68X=49.9Ω

Marking Table

Code	E96	Code	E96	Code	E96	Code	E96
01	100	**25**	178	**49**	316	**73**	562
02	102	**26**	182	**50**	324	**74**	576
03	105	**27**	187	**51**	332	**75**	590
04	107	**28**	191	**52**	340	**76**	604
05	110	**29**	196	**53**	348	**77**	619
06	113	**30**	200	**54**	357	**78**	634
07	115	**31**	205	**55**	365	**79**	649
08	118	**32**	210	**56**	374	**80**	665
09	121	**33**	215	**57**	383	**81**	681
10	124	**34**	221	**58**	392	**82**	698
11	127	**35**	226	**59**	402	**83**	715
12	130	**36**	232	**60**	412	**84**	732
13	133	**37**	237	**61**	422	**85**	750
14	137	**38**	243	**62**	432	**86**	768
15	140	**39**	249	**63**	442	**87**	787
16	143	**40**	255	**64**	453	**88**	806
17	147	**41**	261	**65**	464	**89**	825
18	150	**42**	267	**66**	475	**90**	845
19	154	**43**	274	**67**	487	**91**	866
20	158	**44**	280	**68**	499	**92**	887
21	162	**45**	287	**69**	511	**93**	909
22	165	**46**	294	**70**	523	**94**	931
23	169	**47**	301	**71**	536	**95**	953
24	174	**48**	309	**72**	549	**96**	976

Code	A	B	C	D	E	F	G	H	X	Y	Z
Multiplier	10^0	10^1	10^2	10^3	10^4	10^5	10^6	10^7	10^{-1}	10^{-2}	10^{-3}

0603 3digit marking for E24 Example: 101=100Ω 102=1KΩ

E24	10	11	12	13	15	16	18	20	22	24	27	30	33	36	39	43	47	51	56	62	68	75	82	91

0805~2512 4digit marking Example

Resistance	100Ω	2.2KΩ	10KΩ	49.9KΩ	100KΩ
marking	1000	2201	1002	4992	1003

■Packaging

Packing Quantity & Reel Specifications

Unit :mm

Type	ØA	ØB	ØC	W	T	Paper Tape (EA)	Emboss Plastic Tape (EA)
AR01	178.0±1.0	60.0+1.0	13.5±0.7	9.5±1.0	11.5±1.0	10,000	-
AR02	178.0±1.0	60.0+1.0	13.5±0.7	9.5±1.0	11.5±1.0	10,000	-
AR03	178.0±1.0	60.0+1.0	13.5±0.7	9.5±1.0	11.5±1.0	5,000	-
AR05	178.0±1.0	60.0+1.0	13.5±0.7	9.5±1.0	11.5±1.0	5,000	-
AR06	178.0±1.0	60.0+1.0	13.5±0.7	9.5±1.0	11.5±1.0	5,000	-
AR13	178.0±1.0	60.0±1.0	13.5±0.7	9.5±1.0	11.5±1.0	5,000	-
AR10	178.0±1.0	60.0+1.0	13.5±0.7	13.5±1.0	15.5±1.0	-	4,000
AR12	178.0±1.0	60.0+1.0	13.5±0.7	13.5±1.0	15.5±1.0	-	4,000

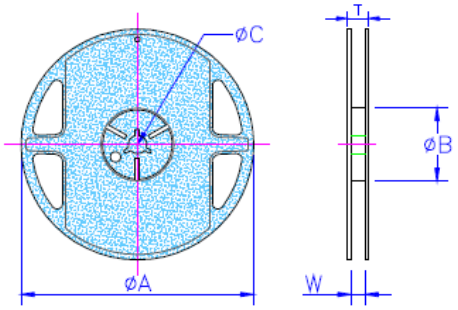

Paper Tape Specifications

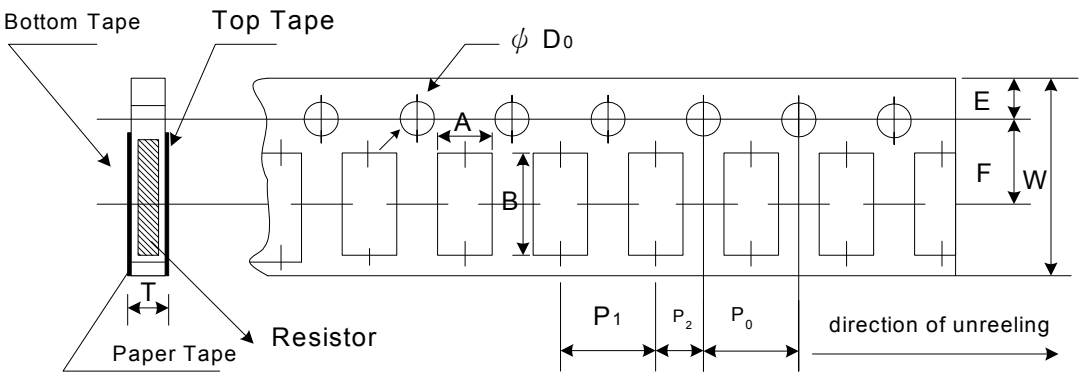

Unit: mm

Type	A	B	W	E	F	P_0	P_1	P_2	$ΦD_0$	T
AR01	0.40±0.05	0.70±0.05	8.00±0.10	1.75±0.05	3.5±0.05	4.00±0.10	2.00±0.05	2.00±0.05	1.55±0.03	0.42±0.02
AR02	0.70±0.05	1.16±0.05	8.00±0.10	1.75±0.05	3.5±0.05	4.00±0.10	2.00±0.05	2.00±0.05	1.55±0.05	0.40±0.03
AR03	1.10±0.05	1.90±0.05	8.00±0.10	1.75±0.05	3.5±0.05	4.00±0.10	4.00±0.10	2.00±0.05	1.55±0.05	0.60±0.03
AR05	1.60±0.05	2.37±0.05	8.00±0.10	1.75±0.05	3.5±0.05	4.00±0.10	4.00±0.10	2.00±0.05	1.55±0.05	0.75±0.05
AR06	2.00±0.05	3.55±0.05	8.00±0.10	1.75±0.05	3.5±0.05	4.00±0.10	4.00±0.10	2.00±0.05	1.55±0.05	0.75±0.05
AR13	2.75±0.05	3.40±0.05	8.00±0.10	1.75±0.05	3.5±0.05	4.00±0.05	4.00±0.10	2.00±0.05	1.60±0.10	0.75±0.05

- ■ Peel force of top cover tape
- ■ The peel speed shall be about 300mm/min±5%
- ■ The peel force of top cover tape shall be between 8gf to 60gf

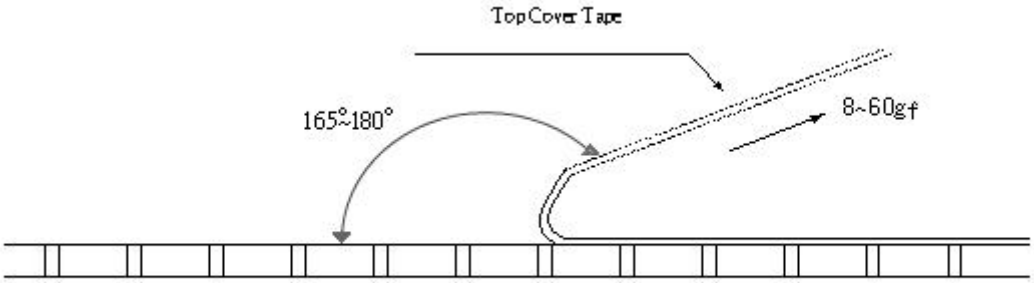

Emboss Plastic Tape Specifications

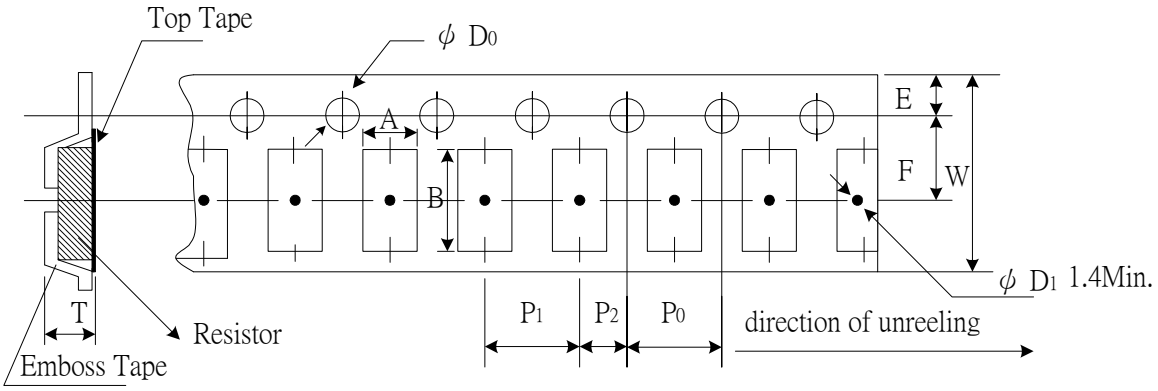

Unit: mm

Type	A	B	W	E	F	P_0	P_1	P_2	$ØD_0$	T
AR10	2.85±0.10	5.45±0.10	12.0±0.10	1.75±0.10	5.5±0.05	4.00±0.05	4.00±0.10	2.00±0.05	1.50+0.10	1.00±0.20
AR12	3.40±0.10	6.65±0.10	12.0±0.10	1.75±0.10	5.5±0.05	4.00±0.05	4.00±0.10	2.00±0.05	1.50+0.10	1.00±0.20

- Peel force of top cover tape
- The peel speed shall be about 300mm/min±5%
- The peel force of top cover tape shall be between 20gf to 80gf

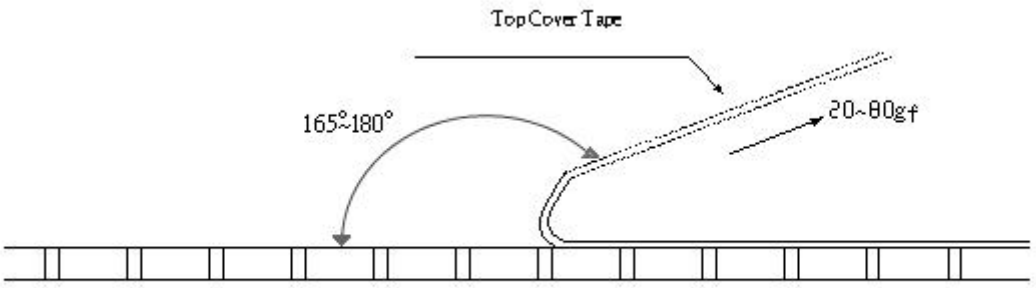

■Recommend Land Pattern

Unit: mm

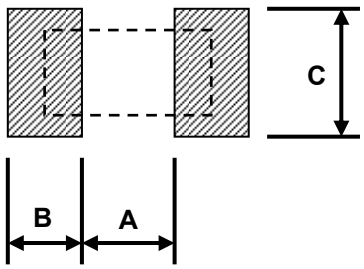

Type	A	B	C
AR01	0.25	0.30	0.40±0.2
AR02	0.50	0.50	0.60±0.2
AR03	0.80	1.00	0.90±0.2
AR05	1.00	1.00	1.35±0.2
AR06	2.00	1.15	1.70±0.2
AR13	2.00	1.15	2.50±0.2
AR10	3.60	1.40	2.50±0.2
AR12	4.90	1.60	3.10±0.2

REVISION HISTORY

REVISION	DATE	CHANGE NOTIFICATION	DESCRIPTION
Version D3	Jan. 14, 2013	-	- Add resistance range for Special Electrical and High Power Rating Electrical Specifications. - Adjust the mockup.
Version D4	Apr. 10, 2013	-	- Add "RCWV" description in Environment Characteristic Test Method.
Version D5	Oct. 16, 2013	-	- Increase the resistance range of AR05, TCR15 product.
Version D6	Oct. 17, 2014	-	- Correct the specification of top cover tape peel force. - Update the resistance range of AR05 (Standard) to 4.7Ω -1MΩ
Version D7	Apr. 28, 2015	-	- Add TCR ±2ppm and ±3ppm products specification. - Increase the resistance range of the products below: • AR02 and AR03 of Standard Electrical Specifications. • AR02, AR03 and AR05 of Special Electrical Specifications. - Correct the element of Top Electrode.
Version D8	May. 02, 2016	-	- Modify Storage Temperature.
Version D9	Aug.04, 2016	-	- Update items and requirements of Environmental Characteristics. - Increase the resistance range of Special Electrical Specifications products.
Version E	Dec.14, 2016	-	- Add AR02 High Power Rating Electrical Specifications.

X-ON Electronics

Largest Supplier of Electrical and Electronic Components

Click to view similar products for Thin Film Resistors - SMD ***category:***

Click to view products by Viking ***manufacturer:***

Other Similar products are found below :

7-2176089-6 MCW0406MD1001DP500 FCR1206J22R FCR1206J33R 1-2176090-3 1-2176089-6 ERA-3EEB2742V NCSR250F4M50DTRGF 2176089-1 2176090-4 2176091-3 CMB02070X3000GB200 CPA2512Q6R80FS-T10 4-1625868-7 5-1625868-9 5-18022-5 ERA-3EEB2671V CFR0W4J0220A2P P1206Y1804FNTA CPA2512E68R0FS-T10 CPA2512Q4R70FS-T10 8-2176091-9 2-2176091-0 NCSR150FR003DTRT3F NTR06B5832CTRF NCSR200JR002DTRF RSJ372NL NRC-S12F4751TRF 8-1625868-1 1-2176092-4 4-2176093-9 2176091-9 RT1220P-101-M PLTU0805U1003LST5 PLTU0603U2001LST5 PLTU0805U1001LST5 PLTU0603U4702LST5 4-2176089-0 8-2176091-0 6-2176091-8 3-2176090-3 1-2176092-7 7-2176092-6 7-2176088-7 PCNM2512E1502BST5 2-2176094-5 PCNM2512E3012BST5 4-2176092-6 3-2176091-4 8-2176091-5