SYMBOL DEFINITION			MISSING NUMBERS
A DIMENSION WITHOUT AN INSPECTION REPORT SYMBOL ⬭ DOES NOT REQUIRE INSPECTION. IT MAY BE CONTROLLED ON AN INDIVIDUAL COMPONENT DRAWING.	TOTAL NO. OF SYMBOLS ON DRAWING	14	
	LAST NO. USED	14	

DWG STATUS DATE	STG	REV	CHG	N/P	ZONE	REVISION HISTORY	AUTH	DR	CK	APVD
20JN00	R	002	-	-		CLEARED REVISION COLUMN. REPLACED CONN				
						ASM WITH 15336553 & ELIMINATED SLEEVE	200268	RJD	RJD	TE
05DE01	R	002	-	AA		ADDED S.S.TERMINAL NOTE, REVISED NOTE 2 & TEMP/RESISTANCE BLOCK	217781	EES	EES	TAE

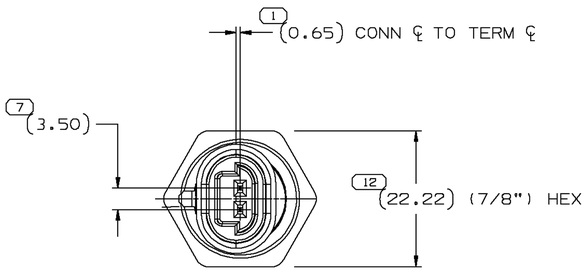

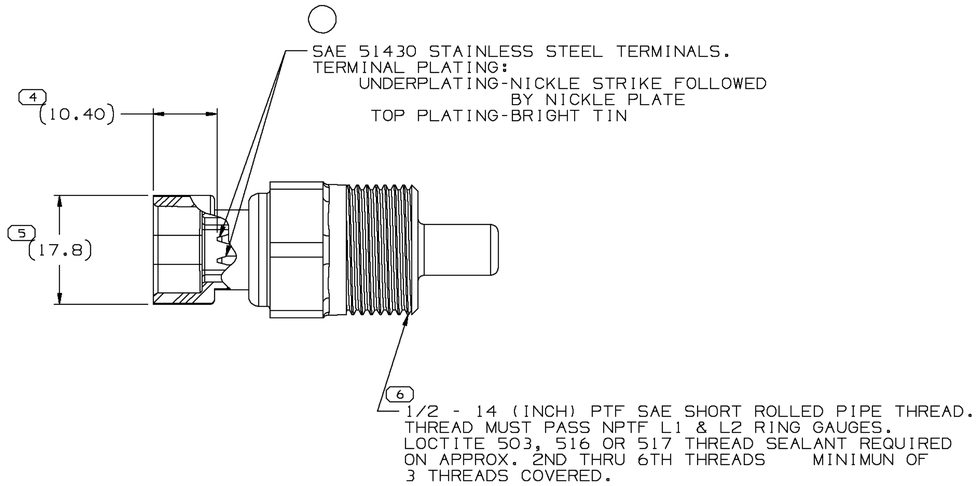

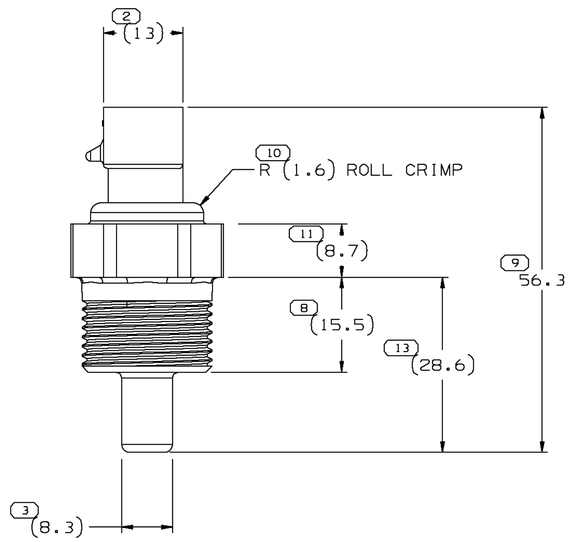

NOTES:

1. UNLESS OTHERWISE SPECIFIED AND/OR INDICATED:
   DIMENSIONS ARE TO FACE OF VIEW SHOWN AND AUTOMATICALLY ROUNDED BY COMPUTER FOR INSPECTION. (SEE MATH MODEL FOR PRECISE DIMENSION)
   FOR ALL OTHER DIMENSIONS NOT SHOWN BUT REQUIRED FOR TOOL BUILD, SEE MATH MODEL FOR PRECISE TOOL PATH DATA.
2. MATING COMPONENTS:
   CONNECTOR 15359366 OR EQUIVALENT.
3. SEALING CODE 3

   DESIGN WILL PASS SALT FOG AND IMMERSION TEST AFTER CONDITIONING AS SPECIFIED IN ESA-644 (WEATHER-PACK), ESA-710 (METRI-PACK), ESA-650 (UNDERHOOD MICRO-PACK), C-4006 (WORLD CONNECTOR), ETC. - WHEN MATED TO MATING PART OR EQUIVALENT.
4. SENSOR MUST BE HAND-STARTED INTO MATING THREADED HOLE (1/2 - 14 NPTF OR NPSF INTERNAL THREAD)

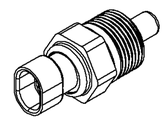

SCALE 1:1

128	81.65±2.91 Ω REF
TEMPERATURE (°C)	NO LOAD RESISTANCE (OHMS)

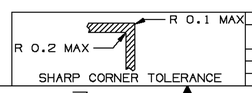

SHARP CORNER TOLERANCE

8 PROCESS SENSITIVE DIMENSION

DIMENSIONS ENCLOSED IN ( ) INDICATE REFERENCE DIMENSIONS AND NO TOLERANCE LIMITS ARE ESTABLISHED

DIMENSIONAL RANGE (MM) CHART E1									
FROM	0	> 20	> 30	> 70	> 100	> 150	> 200	> 250	> 300
TO	20	30	70	100	150	200	250	300	400
TOLERANCE UNLESS OTHERWISE SPECIFIED									
	±0.15	±0.2	±0.3	±0.4	±0.5	±0.6	±0.8	±1	±1.2
ANGULAR TOLERANCE ± 2°									

DELPHI Automotive Systems

MATERIAL SPEC
SEE DRAWING

SUBSTANCES OF CONCERN AND RECYCLED CONTENT PER DELPHI-A 10949001

PART DRAWING

DISTR CODE: D

CODE NUMBER	DWG DATE	SCALE
6900	14MR96	2:1
QC SPEC: C-5216	STYLE	VOLUME cm³: N/A

PART GEOMETRY
3D SOLID

UG
CHANGE RESTRICTED
NO MANUAL CHANGES

COPY OF MATH DATA
DO NOT SCALE

METRIC
UNLESS OTHERWISE SPECIFIED, ALL DIMENSIONS ARE IN MILLIMETERS

UNLESS OTHERWISE SPECIFIED:
THIS DOCUMENT IS IN ACCORDANCE WITH ASME Y14.5M - 1994 AS AMENDED BY THE GM GLOBAL DIMENSIONING AND TOLERANCING ADDENDUM - 1997. ALL GEOMETRIC TOLERANCES AND RELATED DATUMS APPLY RFS. RULE #1 (PERFECT FORM AT MMC) DOES NOT APPLY WHEN RELATIONSHIP BETWEEN FEATURES IS ESTABLISHED BY ORIENTATION OR LOCATION TOLERANCES. SEPARATE POSITION CALLOUTS MAY BE GAGED SEPARATELY REGARDLESS OF DATUM REFERENCES.

REFERENCE		DATE
DR	R. RAMOS S.	14MR96
APVD1	R. RAMOS S.	14MR96
APVD2	R. RAMOS S.	14MR96
APVD3	D. DESANTO	26MR96
APVD4		
APVD5		

THIRD ANGLE PROJECTION

DRAWING NAME
ASM SENSOR CONN 2M M/P 150

SHEET NUMBER	DRAWING NUMBER	DWG STATUS STG	REV	N/P	SIZE
1 OF 1	15304944	R	002	AA	A1

DELPHI PACKARD ELECTRIC SYSTEMS
WARREN, OHIO 44486