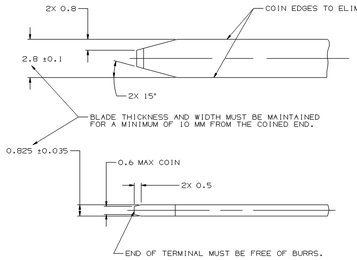

MATERIAL SPECIFICATIONS :

RECOMMENDED

BASE METAL - CDA-210, GILDING, EXTRA SPRING TEMPER.
PLATING - 0.005 ±0.0025 MM THICK TIN.

MINIMUMS

ELECTRICAL CONDUCTIVITY - ≥20% IACS AT 20 °C. USE OF A MATERIAL WITH CONDUCTIVITY <20% IACS MUST BE APPROVED BY PACKARD ELECTRIC MATERIALS ENGINEERING.

TENSILE STRENGTH - 407 MPa
PLATING - FOR LOW ENERGY (≤5 V) & NON- PASSENGER COMPARTMENT POWER CIRCUITS, 0.005 ±0.0025 MM THICK TIN. FOR MATERIALS CONTAINING 10% OR MORE ZINC, AN UNDERPLATE OF COPPER 0.005 ±0.0025 MM THICK IS REQUIRED.

MATING BLADE INFORMATION

SCALE 10:1

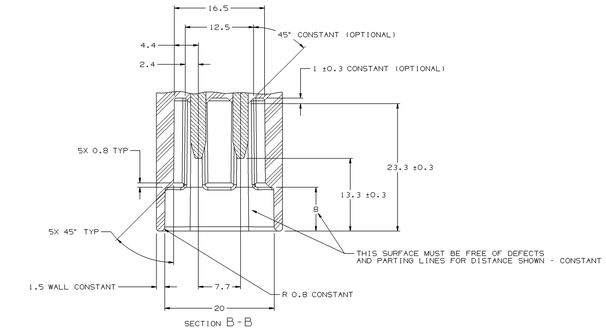

SECTION B-B

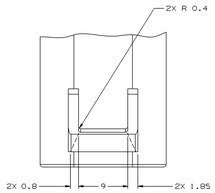

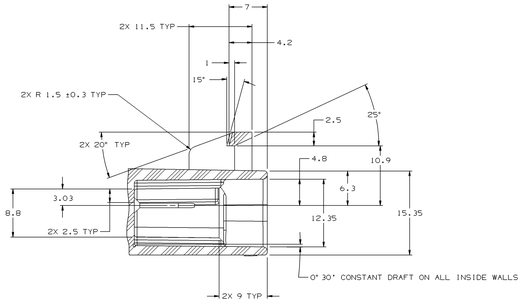

SECTION A-A

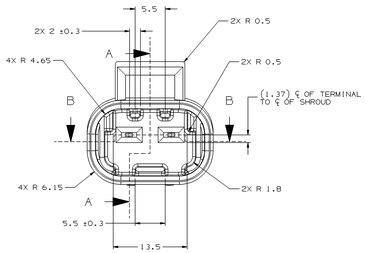

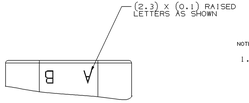

NOTES

1. UNLESS OTHERWISE SPECIFIED AND/OR INDICATED:
   DIMENSIONS ARE TO FACE OF VIEW SHOWN AND AUTOMATICALLY ROUNDED BY COMPUTER FOR INSPECTION. (SEE MATH MODEL FOR PRECISE DIMENSIONS.) FOR ALL OTHER DIMENSIONS NOT SHOWN BUT REQUIRED FOR TOOL BUILD, SEE MATH MODEL FOR PRECISE TOOL PATH DATA.
   ALL RADII 0.5
   DRAFT IS 1° ON ALL OUTSIDE SURFACES
2. TERMINAL MUST WITHSTAND A MINIMUM PUSHOUT FORCE OF 70 NEWTONS.
3. WHEN USING THIS INFORMATION FOR A NEW DESIGN, REQUEST THE LATEST COPY OF THIS PRINT FROM PACKARD ELECTRIC DIVISION.

RECOMMENDED MATERIAL - GLASS REINFORCED NYLON OR POLYESTER.

MATING CONNECTOR INFORMATION

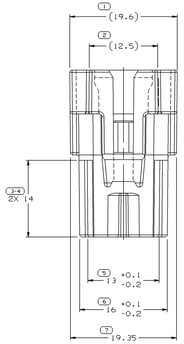

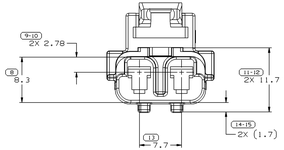

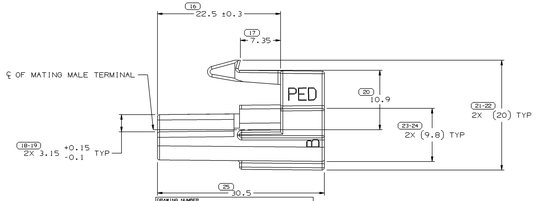

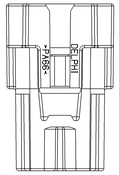

OPTIONAL CONSTRUCTION

NOTES

1. UNLESS OTHERWISE SPECIFIED AND/OR INDICATED:
   DIMENSIONS ARE TO FACE OF VIEW SHOWN AND AUTOMATICALLY ROUNDED BY COMPUTER FOR INSPECTION. (SEE MATH MODEL FOR PRECISE DIMENSIONS.) FOR ALL OTHER DIMENSIONS NOT SHOWN BUT REQUIRED FOR TOOL BUILD, SEE MATH MODEL FOR PRECISE TOOL PATH DATA.
2. MATING COMPONENTS OR EQUIVALENT:
   DELCO PRODUCTS DOOR LOCK ACTUATOR 22087211
3. THIS PART ACCEPTS THE FOLLOWING COMPONENTS OR EQUIVALENT:
   CAVITIES TO ACCEPT TERMINAL 12052837
   CONNECTOR POSITION ASSURANCE LOCK 12052834
   TERMINAL POSITION ASSURANCE LOCK 12084958
4. USE OF PLATED TERMINALS WITH THIS CONNECTOR MAY RESULT IN A MATING FORCE WHICH EXCEEDS THE RECOMMENDED MAXIMUM VALUE FOR NON-MECHANICALLY ASSISTED CONNECTORS (HAND ASSEMBLED).

SYMBOL DEFINITION		MISSING NUMBERS
THE NUMBER INSIDE THE SYMBOL CORRESPONDS TO THE NUMBER ON THE INSPECTION REPORT FOR THIS DRAWING/PART NUMBER	TOTAL NO. OF SYMBOLS ON DRAWING: 18	
	LAST NO. USED: 25	

DWG STATUS					ZONE	REVISION HISTORY	AUTH	DR	APVD 1	APVD 2
DATE	SDS	REV	W/P	CHG						
21JL05	R	C5	-	-		CLEARED REV COLUMN AND CREATED NISSAN CUSTOMER PART DRAWING	2b5749	JTV	PKV	TAV

DIMENSIONAL RANGE (MM)											
FOR	0	>10	>30	>50	>100	>150	>200	>250	>300	>400	>500
TOL	±0.1	±0.2	±0.3	±0.4	±0.5	±0.6	±0.7	±0.8	±0.9	±1.0	±1.2
TOLERANCE UNLESS OTHERWISE SPECIFIED:											
±0.15 ±0.25 ±0.4 ±0.6 ±0.8 ±0.8 ±1 ±1.2											
ANGULAR TOLERANCE ±2°											

25 PROCESS SENSITIVE DIMENSION

REFERENCE

DIMENSIONS ENCLOSED IN ( ) INDICATE REFERENCE DIMENSIONS AND NO TOLERANCE LIMITS ARE ESTABLISHED.

THIRD ANGLE PROJECTION

DO NOT SCALE

USE MATH DATA

MAT TYPE	PART DRAWING	
STYLE		
VOLUME (CM³) 2.750	SYSTEM CODE	

UNLESS OTHERWISE SPECIFIED
THIS DOCUMENT IS IN ACCORDANCE WITH ASME Y14.5M-1994 UNLESS OTHERWISE SPECIFIED. DIMENSIONS ARE TO FACE OF VIEW SHOWN. SEPARATE PATCHES OF FEATURES MAY BE SHARED TEMPORARILY REGARDLESS OF DATUM REFERENCE.

ALL DIMENSIONS ARE IN MILLIMETERS

DELPHI

DELPHI PACKARD ELECTRIC SYSTEMS
WARREN, OH

		DATE
DR		
APVD1	R.J. HRUSOVSKY	01MR99
APVD2	T. NADASKY	05MR99
APVD3	T. TACKETT	01JL99
APVD4		
APVD5		

MATERIAL
SUBSTANCES OF CONCERN AND RECYCLED CONTENT PER DELPHI 10949001
MATERIAL
M25202001 PA66 HS 1M BLK

DRAWING NAME
CONN 2 F M/P 280 BLK

DRAWING NUMBER							
12084957							
SIZE	SCALE	FRAME NO	SHEET NO	STG	REV	W/P	
A1x3	4:1	2 OF 1	1 OF 1	R	C5	-	

12084957