SYMBOL DEFINITION		
A DIMENSION WITHOUT AN INSPECTION REPORT SYMBOL (□) DOES NOT REQUIRE INSPECTION. IT MAY BE CONTROLLED ON THE INDIVIDUAL COMPONENT DRAWING.	TOTAL NO OF INSPECTIONS REQUIRED	84
	LAST NO. USED	27

MISSING SYMBOLS
NO MISSING SYMBOL NUMBER

DWG STATUS					ZONE	REVISION HISTORY	AUTH	DR	APVD	APVD
DATE	STA	REV	N/P	CHG					1	2
31JA05	R	18	-	-		ALL PARTS - CLEARED REV COL AND REDRAWN TO REV 13521472, 13521476 & 13516905 - RELEASED	264071	RTV	JWP	PTP
05APO7	R	19	-	-		ALL PARTS - UPDATED PDM ATTRIBUTES	401058	RTV	JWP	PTP

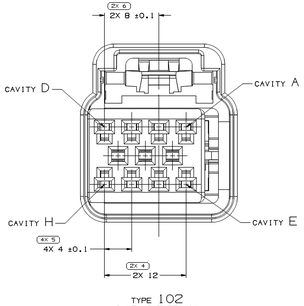

TYPE 102
SAME AS TYPE 101
EXCEPT AS SHOWN

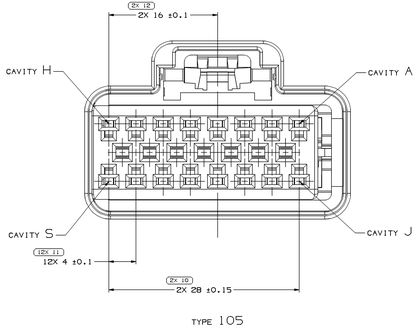

TYPE 105
SAME AS TYPE 101
EXCEPT AS SHOWN

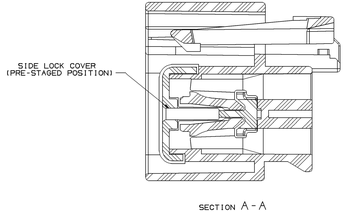

SECTION A - A

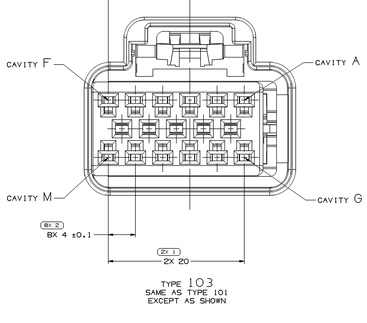

TYPE 103
SAME AS TYPE 101
EXCEPT AS SHOWN

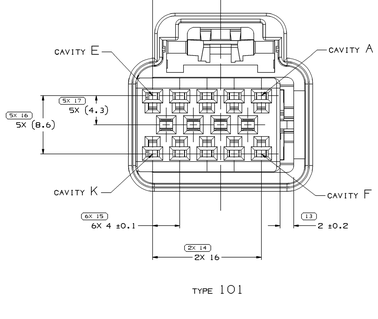

TYPE 101

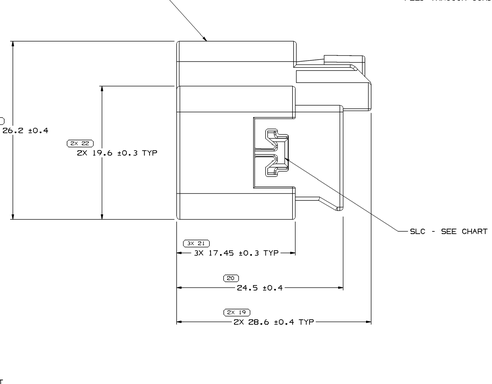

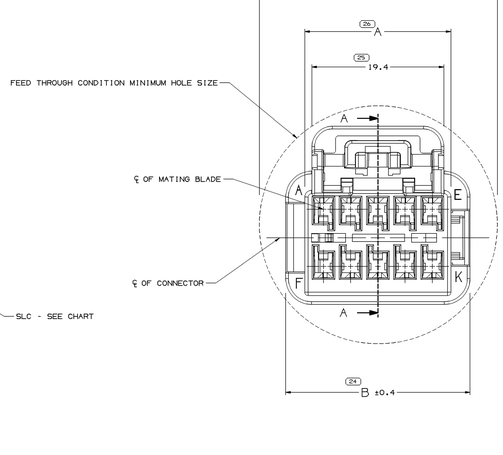

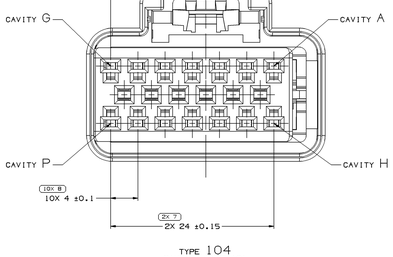

TYPE 104
SAME AS TYPE 101
EXCEPT AS SHOWN

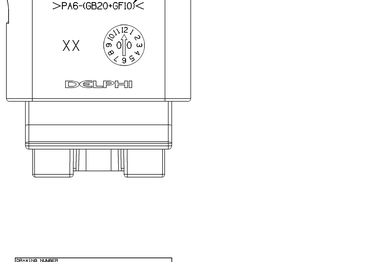

NOTES

1. UNLESS OTHERWISE SPECIFIED AND/OR INDICATED:

   DIMENSIONS ARE TO FACE OF VIEW SHOWN AND AUTOMATICALLY ROUNDED BY COMPUTER FOR INSPECTION (SEE MATH MODEL FOR PRECISE DIMENSIONS). FOR ALL OTHER DIMENSIONS NOT SHOWN BUT REQUIRED FOR TOOL BUILD, SEE MATH MODEL FOR PRECISE TOOL PATH DATA. LIKE CAVITIES ARE IDENTICAL

2. THIS PART ACCEPTS THE FOLLOWING COMPONENTS OR EQUIVALENT:
   CAVITIES ESD00152 TO ACCEPT 12191812 TERMINAL

3. REFERENCE MATING COMPONENTS OR EQUIVALENT:
   TAXI CONN M GT 150 15326984

4. FOR MATING CONFIGURATION REQUIREMENTS SEE 15336382.

5. SEALING CODE 0 - UNSEALED

6. DO NOT USE I, O, Q & U AS CAVITY LETTERS

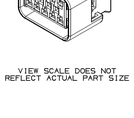

VIEW SCALE DOES NOT
REFLECT ACTUAL PART SIZE

PART NO	REV	N/P	DATE	STATUS	TYPE	CONNECTOR	CAVITIES	MATERIAL RECYCLING CODE	SLC	A	B	C	MATING ASM CONNECTOR
13516905	01	AA	28JA05	-	105	13516904	16	PBT-200F	15332180/1D405536	33.5 ±0.4	39.1	43	13516907
13521476	01	AA	28JA05	-	104	13521475	14	PBT-200F	15332172/1D405529	29.5 ±0.4	35.1	39	13521478
13521472	01	AA	28JA05	-	102	13521471	8	PBT-200F	15332148/1D405513	17.5 ±0.3	23.1	33	13521474
15332177/1D405537	04	AB	-	-	105	15332176/1D405535	16	PA6-GB20 GF10	15332180/1D405536	33.5 ±0.4	39.1	43	15332182/1D405541
15332169/1D405530	04	AB	-	-	104	15332168/1D405528	14	PA6-GB20 GF10	15332172/1D405529	29.5 ±0.4	35.1	39	15332174/1D405534
15332161/1D405523	04	AB	-	-	103	15332160/1D405520	12	PA6-GB20 GF10	15332164/1D405521	25.5 ±0.4	31.1	36	15332166/1D405527
15459912	01	AA	06MY03	-	103	15459921	12	PBT-200F	15332164/1D405521	25.5 ±0.4	31.1	36	15459913
15332145/1D405514	04	AB	-	-	102	15332144/1D405512	8	PA6-GB20 GF10	15332148/1D405513	17.5 ±0.3	23.1	33	15332150/1D405519
15459918	01	AA	06MY03	-	101	15459950	10	PBT-200F	15332156/1D405303	21.5 ±0.3	27.1	35	15459917
15332153/1D405304	04	AB	-	-	101	15332152/1D405302	10	PA6-GB20 GF10	15332156/1D405303	21.5 ±0.3	27.1	35	15332158/1D405307

DRAWING NUMBER							
15326980							
SIZE	SCALE	TRACE NO	SHEET	SHEET NO	TOTAL	PREV	N/P
A1x3	5:1	2 OF 2	1 OF 1	R	19	-	

DWG TYPE	
PART DRAWING	
STYLE	
VOLUME CONT	SYSTEM CODE D

UNLESS OTHERWISE SPECIFIED
THIS DOCUMENT IS IN ACCORDANCE WITH ASME Y14.100-1998 AS ADAPTED BY DELPHI GLOBAL SUBSTANDARD 1000.
THIS DOCUMENT IS THE PROPERTY OF DELPHI AND MAY NOT BE COPIED OR REPRODUCED IN WHOLE OR IN PART WITHOUT PRIOR WRITTEN PERMISSION OF DELPHI OR BY AN OWNER REPUTEDLY ASSOCIATED OR DELPHI REFERENCED.

ALL DIMENSIONS ARE IN MILLIMETERS

REFERENCE

N/A PROCESS SENSITIVE DIMENSION

DIMENSIONS ENCLOSED IN () INDICATE REFERENCE DIMENSIONS, NOT AS TOLERANCE LIMITS AND DETAILS CHECKED

ALTERNATIVE RANGE (MM)											
FROM	0	3	30	6	10	100	150	200	300	400
TO	3	30	6	10	100	150	200	300	400	600

TOLERANCE UNLESS OTHERWISE SPECIFIED
(±0.15) (±0.4) (±0.1) (±0.2) (±0.3) (±0.4) (±0.5) (±1.0)
ANGULAR TOLERANCE ±2°

THIRD ANGLE PROJECTION

DO NOT SCALE

SEE MATH DATA

DELPHI

DELPHI PACKARD ELECTRICAL/ELECTRONIC ARCHITECTURE
WARREN, OH

		DATE
DR		
APVD1	F. GRUSS	160C96
APVD2	R. KOCH	09SE97
APVD3	R. WIS	10SE97
APVD4		
APVD5		

SUBSTANCES OF CONCERN AND RECYCLED CONTENT PER DELPHI (DP4950)

MATERIAL
SEE CHART

DRAWING NAME
TAXI ASM CONN F GT 150

DRAWING NUMBER							
15326980							
SIZE	SCALE	TRACE NO	SHEET	SHEET NO	TOTAL	PREV	N/P
A1x3	5:1	1 OF 2	1 OF 1	R	19	-	

15326980