SYMBOL DEFINITION		
A DIMENSION WITHOUT AN INSPECTION REPORT SYMBOL (▭) DOES NOT REQUIRE INSPECTION. IT MAY BE CONTROLLED ON THE INDIVIDUAL COMPONENT DRAWING.	TOTAL NO OF INSPECTIONS REQUIRED	17
	LAST NO. USED	14

MISSING SYMBOLS
NO MISSING SYMBOL NUMBER

DWG STATUS DATE	SIZE	REV	N/P	CHG	ZONE	REVISION HISTORY	AUTH	DR	APVD 1	APVD 2
27FE04	R	02	-	-		REVISED PD	252119	M.M	M.M	MR
07SE04	R	03	-	-		12010300 - REVISED PER NIN EWO BOLTS ALL PARTS - REVISED TQO	252892	M.M	M.M	MFR
12OC04	R	04	-	-		12059168, 12059255 & 12066082 - REVISED NON PHYSICAL ECL TO AGREE WITH IMSTR0318	259625	RTV	JVM	MFR

OPTIONAL CONSTRUCTION 1

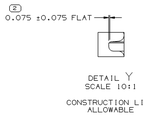

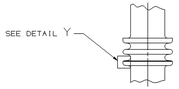

OPTIONAL CONSTRUCTION 2

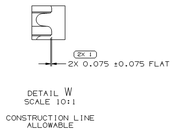

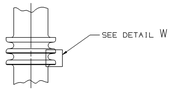

OPTIONAL CONSTRUCTION 3

OPTIONAL CONSTRUCTION 4

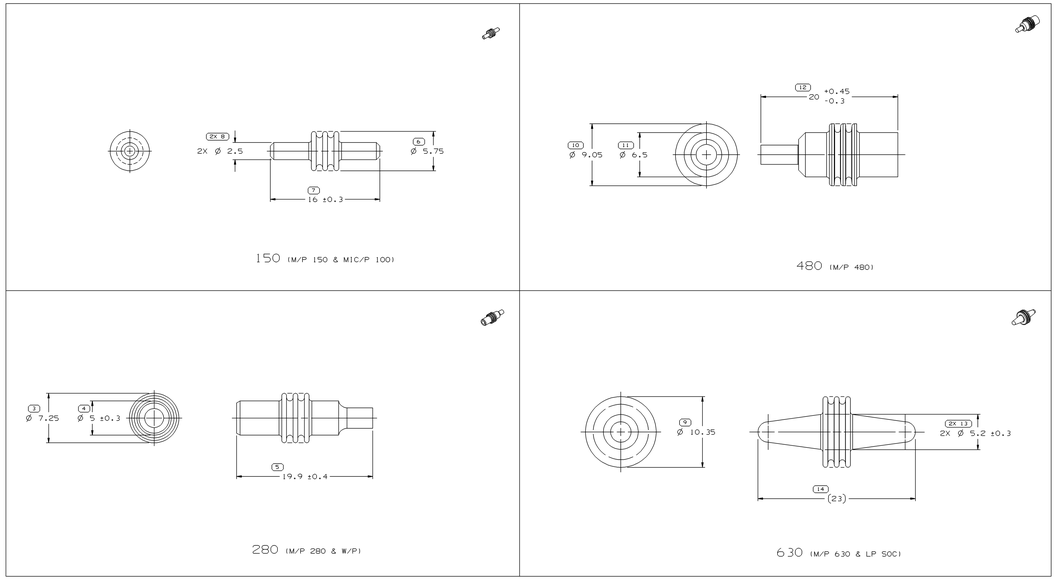

NOTES

1. UNLESS OTHERWISE SPECIFIED AND/OR INDICATED:
   DIMENSIONS ARE TO FACE OF VIEW SHOWN AND AUTOMATICALLY ROUNDED BY COMPUTER FOR INSPECTION (SEE MATH MODEL FOR PRECISE DIMENSIONS). FOR ALL OTHER DIMENSIONS NOT SHOWN BUT REQUIRED FOR TOOL BUILD, SEE MATH MODEL FOR PRECISE TOOL PATH DATA.
2. SEALING RIBS ARE IDENTICAL, EXCEPT AS SHOWN.
3. THIS PART IS NOT CONTROLLED FOR AUTOMATIC FEEDING.

PART NO	REV	N/P	STATUS	MATERIAL SPEC	COLOR (REF ONLY)	ALTERNATE MATERIAL SPEC	TYPE	ID CAVITY	VOLUME
12066082	B	6		M2261001	GRN	-	480	8.5	0.510
12059255	A	6		M2261001	GRN	-	630	9.8	0.507
12059168	A	7		M2261019	RED DK	-	150	5.2	0.135
12010300	OB	-		M34690007	GRN	M22261001	280	6.7	0.311

DRAWING NUMBER							
12124630							
SIZE	SCALE	FRAME NO	SHEET NO	STG	REV	N/P	
A1x3	5:1	2 OF 2	1 OF 2	R	04	-	

DIMENSIONAL RANGE (MM)								
FROM	0	>3.00	>6	>10	>100	>200	>500	>800
TO	3.00	6	10	100	200	500	800	
TOLERANCE UNLESS OTHERWISE SPECIFIED								
±0.15	±0.20	±0.25	±0.30	±0.40	±0.50	±0.75	±1.0	±1.2
ANGULAR TOLERANCE ±2°								

(N/A) PROCESS SENSITIVE DIMENSION

REFERENCE

DIMENSIONS ENCLOSED IN ( ) INDICATE REFERENCE DIMENSIONS AND NO TOLERANCE (NOT MEASURABLE)

ALL DIMENSIONS ARE IN MILLIMETERS

THIRD ANGLE PROJECTION

DO NOT SCALE

USE MATH DATA

DELPHI

DWG TYPE	
PART DRAWING	
STYLE	
VOLUME (CM³) SEE CHART	SYSTEM CODE

UNLESS OTHERWISE SPECIFIED

THIS DOCUMENT IS IN ACCORDANCE WITH ASME Y14.5M-1994 UNLESS OTHERWISE SPECIFIED. DIMENSIONS AND TOLERANCES INCLUDE ALL SURFACE FINISHES OF FEATURES MAY BE RANDOMLY REMARKED OF DATUM REFERENCE.

APVD1 A. DELGADO	18NOV97
APVD2 A. DELGADO	18NOV97
APVD3 J. BANZO	18NOV97
APVD4	
APVD5	

SUBSTANCES OF CONCERN: PVC RECYCLED CONTENT PER DELPHI (DP4900)

MATERIAL: SEE CHART

DELPHI PACKARD ELECTRIC SYSTEMS WARREN, OH

DRAWING NAME: TAXI SEAL CONN CAVITY PLUG

DRAWING NUMBER							
12124630							
SIZE	SCALE	FRAME NO	SHEET NO	STG	REV	N/P	
A1x3	5:1	1 OF 2	1 OF 2	R	04	-	

1 1 5 t e 3 0