SYMBOL DEFINITION		MISSING NUMBERS
A DIMENSION WITHOUT AN INSPECTION REPORT SYMBOL [ ] DOES NOT REQUIRE INSPECTION. IT MAY BE CONTROLLED ON AN INDIVIDUAL COMPONENT DRAWING.	TOTAL NO. OF SYMBOLS ON DRAWING: 22 LAST NO. USED: 38	

DWG STATUS DATE	SIZE	REV	N/P	CHG	ZONE	REVISION HISTORY	AUTH	DR	APVD	APVD 2
25MR02	R	02	-	-	-	CLEARED REV COLI ALL PARTS - ADDED DELPHI CODE NOTE & RECYCLING CODE NOTE, REVISED LOCK AND REVISED MAT'L SPEC	222611	BYP	RH	RC
03MY02	R	03	-	-	-	ALL PARTS - ADDED DIMS 12 PLCS1, ADDED SINK NOTE AND REVISED GRAPHICS	226038	BYP	RH	RC
05SE02	R	04	-	-	-	ALL PARTS - REVISED GRAPHICS.	226352	RVP	RVP	RC
06JN03	R	05	-	-	-	ALL PARTS - REVISED MAT'L SPEC	242949	LFS	RVP	RC

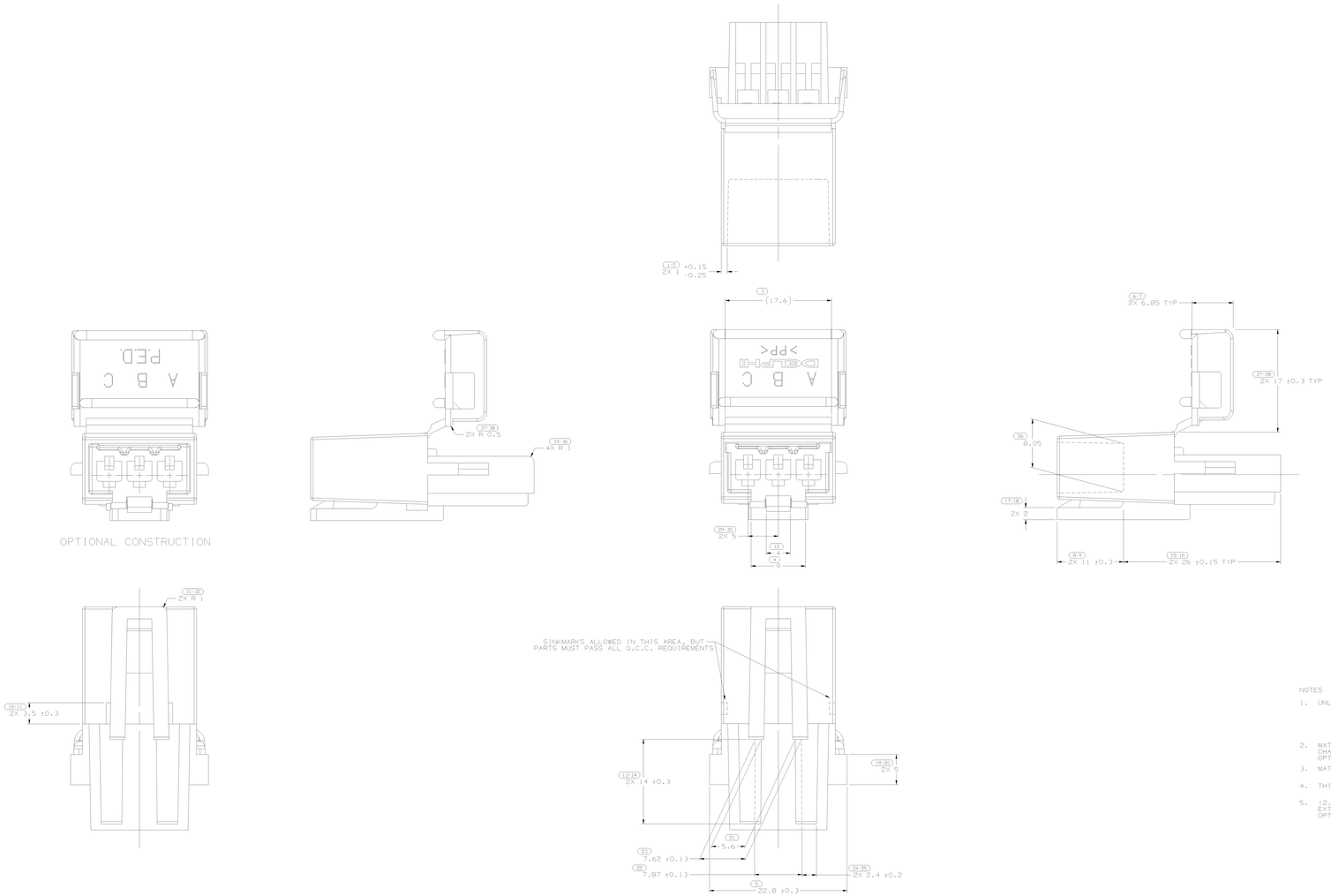

NOTES

1. UNLESS OTHERWISE SPECIFIED AND/OR INDICATED:
   DIMENSIONS ARE TO FACE OF VIEW SHOWN AND AUTOMATICALLY ROUNDED BY COMPUTER FOR INSPECTION (SEE MATH MODEL FOR PRECISE DIMENSIONS). FOR ALL OTHER DIMENSIONS NOT SHOWN BUT REQUIRED FOR TOOL BUILD, SEE MATH MODEL FOR PRECISE TOOL PATH DATA.
2. MATERIAL RECYCLING CODE >PP< PER SAE J1344. (2.31X10.1) RAISED CHARACTERS AS SHOWN TO BE LOCATED ON ANY EXTERIOR SURFACE. OPTIONAL CONSTRUCTION TO BE NO MATERIAL RECYCLING CODE.
3. MATING COMPONENTS OR EQUIVALENT:
   CONNECTOR 12020397
4. THIS PART ACCEPTS THE FOLLOWING COMPONENTS OR EQUIVALENT:
   CAVITIES TO ACCEPT 12034037 TERMINAL OR EQUIVALENT.
5. (2.31X10.1) RAISED DELPHI CORPORATE BRAND TO BE LOCATED ON ANY EXTERIOR SURFACE, PREFERABLY VISIBLE AT FINAL ASSEMBLY. OPTIONAL CONSTRUCTION TO BE "PED" OR NO LOGO.

PART NO	REV	N/P	STATUS	MATERIAL SPECIFICATION AND COLOR	VOLUME CM³
12066437	05	-		M2097008 PP 1M BLU	4.056
12020298	05	-		M2097001 PP 1M BLK	4.073

R 0.1 MAX
R 0.2 MAX
SHARP CORNER TOLERANCE

DIMENSIONAL RANGE (MM)									
FROM	0	6	30	120	>100	>150	>200	>250	>300
TO	6	30	120	150	200	250	300	400	
TOLERANCE UNLESS OTHERWISE SPECIFIED									
±0.15	±0.2	±0.25	±0.3	±0.35	±0.4	±0.5	±0.6	±1	±1.2
ANGULAR TOLERANCE ±2°									

(S) PROCESS SENSITIVE DIMENSION

DIMENSION ENCLOSED IN [ ] INDICATE REFERENCE DIMENSIONS AND NO TOLERANCE ( ) NOT ON DWG.

REFERENCE

THIRD ANGLE PROJECTION

DO NOT SCALE USE MATH DATA

DWG TYPE: PART DRAWING
STYLE:
VOLUME (CM³): SEE CHART
SYSTEM CODE:
ROUTING: 6900

UNLESS OTHERWISE SPECIFIED

THIS DOCUMENT IS IN ACCORDANCE WITH ASME Y14.5M-1994 UNLESS OTHERWISE SPECIFIED. ALL GEOMETRIC TOLERANCES APPLY TO ALL FEATURES. ALL GEOMETRIC TOLERANCES AND RELATED DATUMS APPLY AT MMC. RULE #1(PERFECT FORM AT MMC) APPLIES TO ALL FEATURES OF SIZE. DIMENSIONS TO LOCATIONS ARE BASED ON LOCATION TOLERANCES. DIMENSIONS TO LOCATIONS ARE BASED GRAPHICALLY. REGARDLESS OF DATUM REFERENCE.
ALL DIMENSIONS ARE IN MILLIMETERS

APVD1 D. HERMOSILLO 18DEC00
APVD2 G. ESTRADA 18DEC00
APVD3 J. ALVAREZ 21DEC00
APVD4
APVD5
SUBSTANCES OF CONCERN AND RECYCLED CONTENT PER DELPHI (DAPVD5)

MATERIAL: SEE CHART

DRAWING NAME: TAXI CONN 3M M/P 280

DELPHI
DELPHI PACKARD ELECTRIC SYSTEMS
WARREN, OH

DRAWING NUMBER: 12066438
SIZE A1x3 | SCALE S11 | FRAME NO 2 OF 2 | SHEET NO 1 OF 1 | STG R | REV 05 | N/P -

DRAWING NUMBER: 12066438
SIZE A1x3 | SCALE S11 | FRAME NO 2 OF 2 | SHEET NO 1 OF 1 | STG R | REV 05 | N/P -