DO NOT SCALE

PART NO 1216 0480

DATE	SYM	REVISION RECORD	AUTH	DR	CK
18AP94	A	WAS PE041373 & RELEASED	940005	KLJ	DLB
18JL94	B	REVISED GRAPHICS	161374	AUG	DLB
23NO94	B1	REVISED	164472	JGS	BAS
10AP97	B2	UPDATED AND REVISED			
		GRAPHICS	177578	HH	JIB
21OC98	B3	UPDATED AND REVISED			
		GRAPHICS	190269	JIB	JIB

PART NO 1216 0480

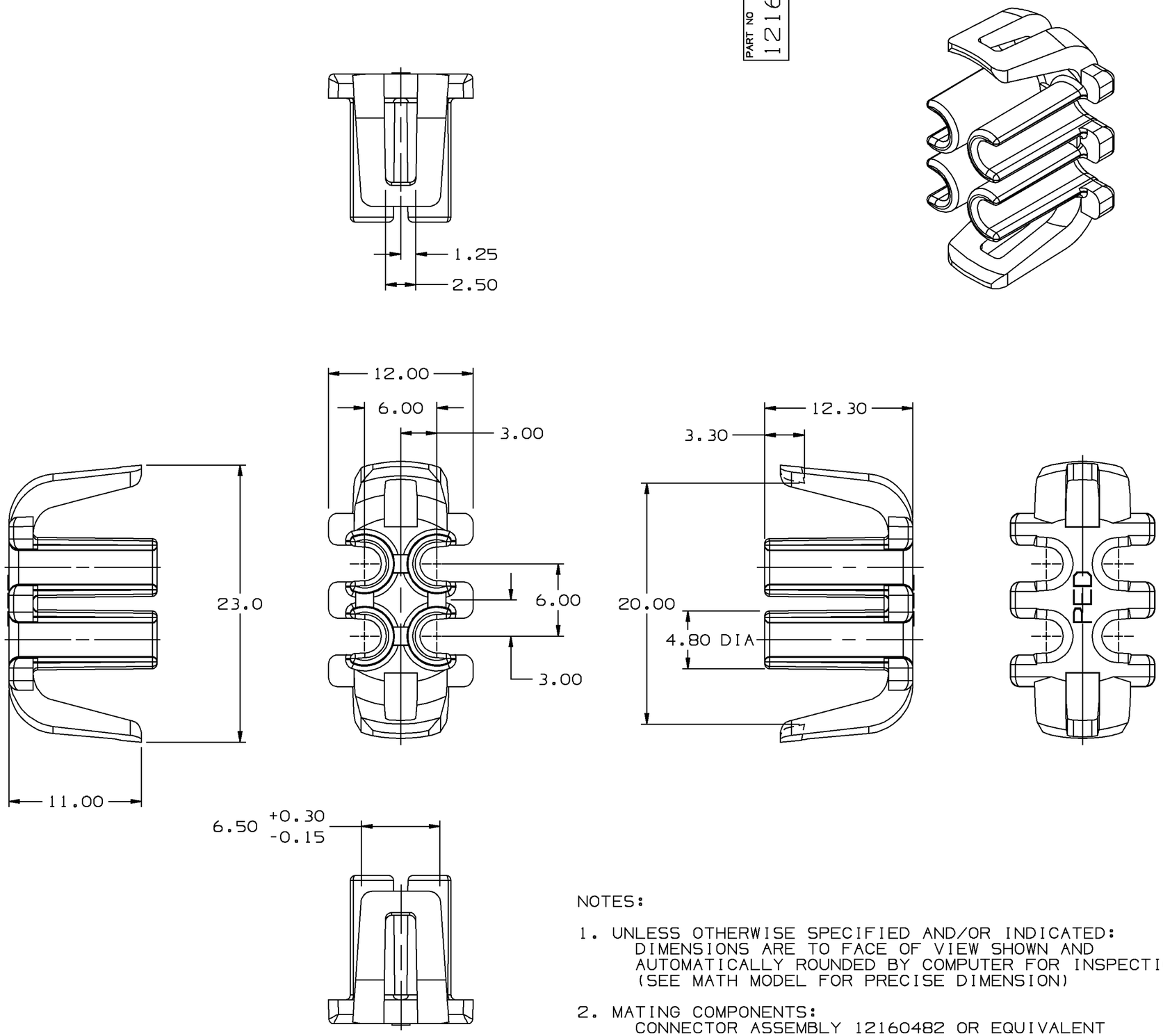

NOTES:

1. UNLESS OTHERWISE SPECIFIED AND/OR INDICATED:
   DIMENSIONS ARE TO FACE OF VIEW SHOWN AND
   AUTOMATICALLY ROUNDED BY COMPUTER FOR INSPECTION.
   (SEE MATH MODEL FOR PRECISE DIMENSION)

2. MATING COMPONENTS:
   CONNECTOR ASSEMBLY 12160482 OR EQUIVALENT

DELPHI PACKARD ELECTRIC SYSTEMS
WARREN, OHIO 44486

DRAWING TYPE PID	OTHER DRAWINGS AVAILABLE
Unigraphics II	METRIC DIMENSIONS ARE IN MILLIMETERS UNLESS OTHERWISE SPECIFIED
THIRD ANGLE PROJECTION	TOLERANCE UNLESS OTHERWISE SPECIFIED DECIMAL: ANGULAR ± 2°
	ONE PLACE ± 0.3
CODE NO 6900 / QC	TWO PLACE ± 0.15
DWG DATE 18AP94	DES DAN HUFF 14OC93
SCALE 4:1	DR K.L. JONES 18AP94
REFERENCE NO 12160480 "A1" SIZE	CK D BRANTINGHAM 19AP94
	APPR PAUL OLBRYCH 25AP94
	VOL CM³ 0.759

MATERIAL SPEC R0071784
NYLON 66 HS IM MEDIUM GRAY

NAME
TPA M/P 150

PART NUMBER 1216 0480 SIZE A2