D THIS DRAWING AND DESIGN HEREON CONSTITUTES A PROPRIETARY DESIGN OF PACKARD ELECTRIC DIVISION AND IS NOT TO BE DUPLICATED OR REPRODUCED WITHOUT AUTHORITY OF PACKARD ELECTRIC DIVISION

DO NOT SCALE

PART NO 1212 9812

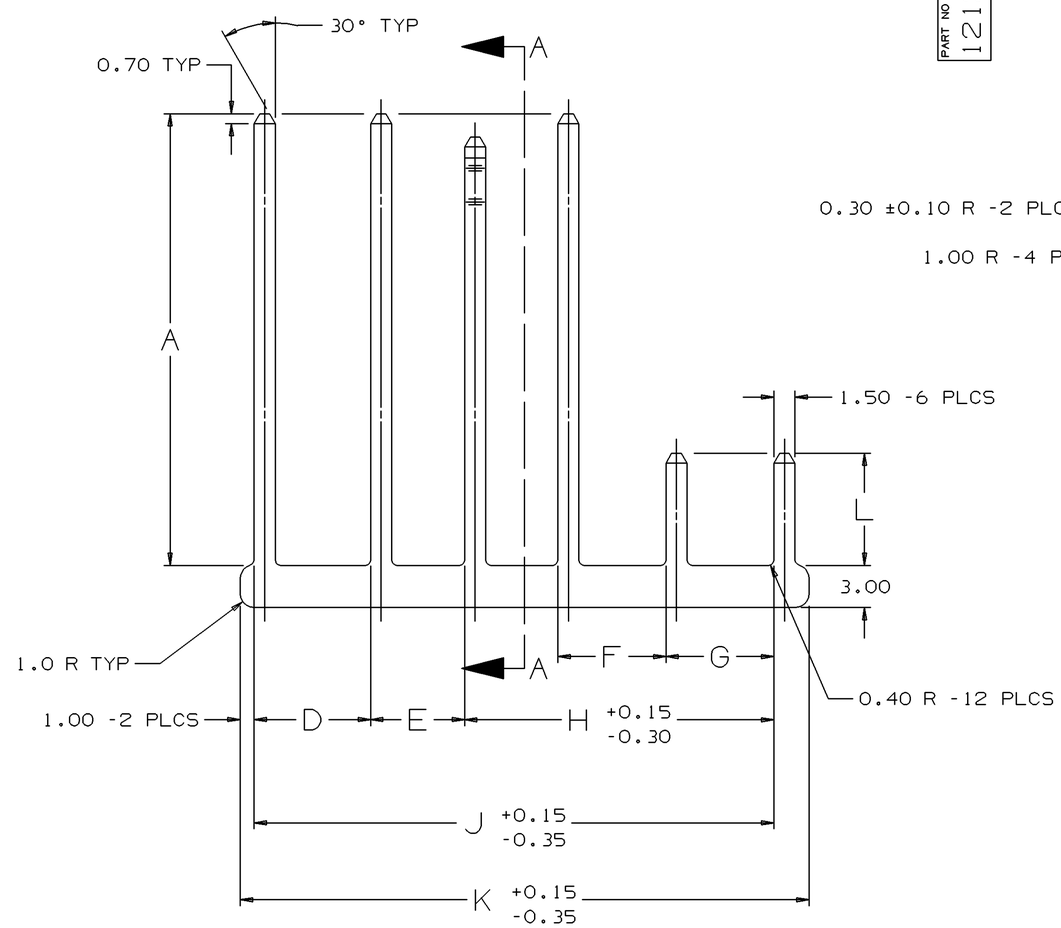

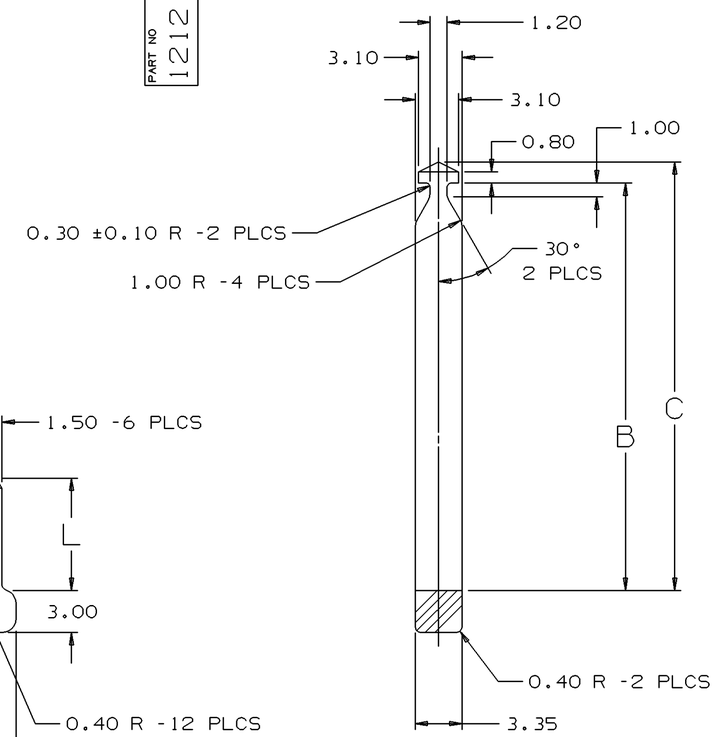

DATE	SYM	REVISION RECORD	AUTH	DR	CK
20MY92	—	12066050 - WAS			
		SEPARATE "C" SIZE			
		- REVISION LEVEL			
		REMAINS AT "A"	147967	RKR	
20MY92	—	12129669 - RELEASED			
		TO REV "A"	920005	RKR	
26DE95	—	ALL PARTS - REVISED			
		MAT'L SPEC - NO REV			
		UPDATE REQ'D	168432	MRG	RRS

PART NO 1212 9812

PACKARD ELECTRIC DIVISION
GENERAL MOTORS CORPORATION
WARREN, OHIO

NOTES —

2. SECONDARY LOCK FOR (SEE CHART).

PART NO	REV	STATUS	MATERIAL SPEC & COLOR	A	B	C	D	E	F	G	H	J	K	L	MATING PART
12129669	A		R0100185 PBT NAT	39.90	36.80	38.30	6.70	6.70	9.35	7.25	23.30	36.70	40.20	12.10	12129674
12066050	A		R0100185 PBT NAT	32.20	29.05	30.55	8.30	6.70	7.70	7.70	22.05	37.05	40.55	8.00	12065850

Uligraphics II

THIRD ANGLE PROJECTION

METRIC
DIMENSIONS ARE IN MILLIMETERS UNLESS OTHERWISE SPECIFIED

TOLERANCE UNLESS OTHERWISE SPECIFIED
DECIMAL: ANGULAR ±2°
ONE PLACE ±0.3
TWO PLACE ±0.15

CODE NO 6900	QC -C-4004		
DWG DATE 18MR92		DR R.K. RACZ	20MY92
SCALE 4:1		CK R.K. RACZ	20MY92
REFERENCE NO		APPR D. PFAFFINGER	04JN92
		APPR J.A. WILSON	05JN92

MATERIAL SPEC: SEE CHART

NAME: TPA F M/P MXD

PART NUMBER: 1212 9812 SIZE A2