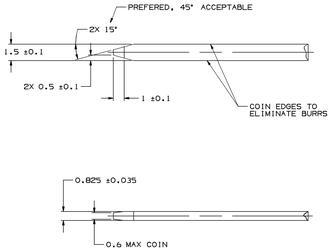

MATERIAL SPECIFICATIONS

RECOMMENDED MATERIAL: P-1546 (CA-210)BRASS - EXTRA SPRING TEMPER - TIN PLATED

PLATING THICKNESS: 0.003-0.005 MM

TENSILE STRENGTH: 430 MPA

NOTE - USE OF A MATERIAL WITH A CONDUCTIVITY ≤ 20% IACS AT 68° F SHOULD BE APPROVED BY PACKARD ELECTRIC.

MATING TERMINAL INFORMATION

SCALE 8:1

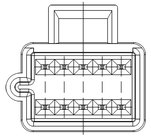

TYPE 102

SAME AS TYPE 101 EXCEPT AS SHOWN

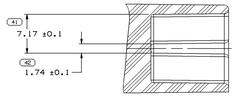

SECTION C-C

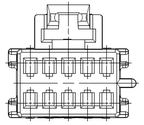

TYPE 102

SAME AS TYPE 101 EXCEPT AS SHOWN

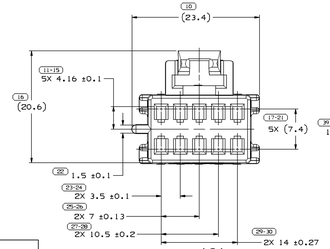

TYPE 101

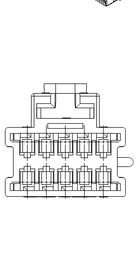

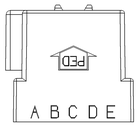

OPTIONAL CONSTRUCTION

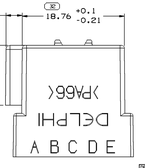

NOTES

1. UNLESS OTHERWISE SPECIFIED AND/OR INDICATED: DIMENSIONS ARE TO FACE OF VIEW SHOWN AND AUTOMATICALLY ROUNDED BY COMPUTER FOR INSPECTION. (SEE MATH MODEL FOR PRECISE DIMENSIONS.) FOR ALL OTHER DIMENSIONS NOT SHOWN BUT REQUIRED FOR TOOL BUILD, SEE MATH MODEL FOR PRECISE TOOL PATH DATA.
2. THIS PART ACCEPTS THE FOLLOWING COMPONENTS OR EQUIVALENT: CAVITIES TO ACCEPT 12047883 TERMINAL MAX. INSULATION CRIMP MUST BE LESS THAN 2.65 HIGH AND 2.7 WIDE SECONDARY TERMINAL LOCK 12064771 (2 PER CONNECTOR) CONNECTOR POSITION ASSURANCE LOCK 12052834
3. THIS CONNECTOR WILL PASS THROUGH A 28.5 DIA MIN HOLE.
4. MATERIAL RECYCLING CODE >PA66< PER SAE J1344. (2-3)X(0.1) RAISED CHARACTERS AS SHOWN TO BE LOCATED ON ANY EXTERIOR SURFACE. OPTIONAL CONSTRUCTION TO BE NO MATERIAL RECYCLING CODE.
5. (2.3)X(0.1) RAISED DELPHI CORPORATE BRAND TO BE LOCATED ON ANY EXTERIOR SURFACE, PREFERABLY VISIBLE AT FINAL ASSEMBLY. OPTIONAL CONSTRUCTION TO BE "PED" OR NO LOGO.

DRAWING NUMBER 12065165

SIZE	SCALE	SHEET NO	SHEETS	MATERIAL	REV	N/P
A1x3	4:1	2 OF 2	1 OF 1	R	03	-

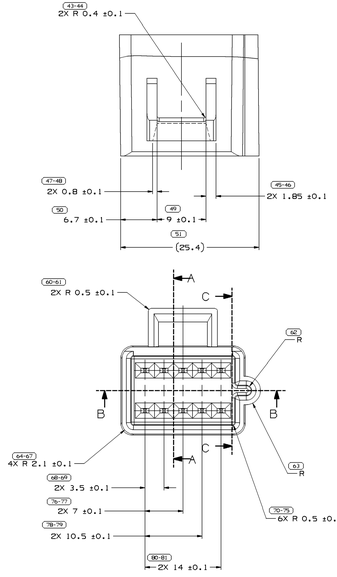

TYPE 101

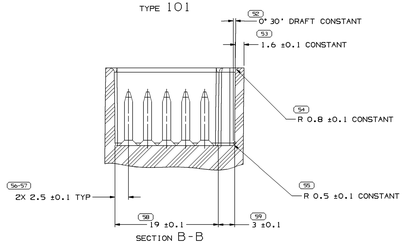

SECTION B-B

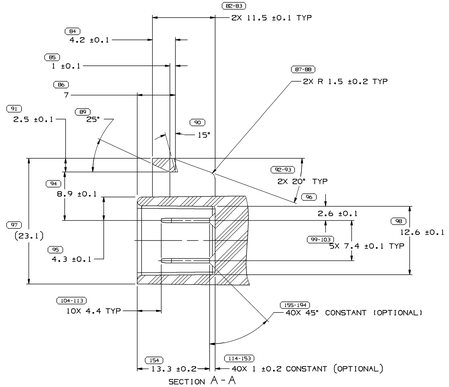

SECTION A-A

NOTES

1. UNLESS OTHERWISE SPECIFIED AND/OR INDICATED: DIMENSIONS ARE TO FACE OF VIEW SHOWN AND AUTOMATICALLY ROUNDED BY COMPUTER FOR INSPECTION. (SEE MATH MODEL FOR PRECISE DIMENSIONS.) FOR ALL OTHER DIMENSIONS NOT SHOWN BUT REQUIRED FOR TOOL BUILD, SEE MATH MODEL FOR PRECISE TOOL PATH DATA. ALL RADII 0.5 DRAFT IS 0° 30' ON ALL OUTSIDE SURFACES
2. TERMINALS MUST WITHSTAND A MINIMUM PUSHOUT FORCE OF 89 N (20 LBS).
3. RECOMMENDED BODY MATERIAL: POLYESTER OR EQUIVALENT THERMOPLASTIC.

MATING CONNECTOR INFORMATION

PART NO	REV	N/P	STATUS	TYPE	MATERIAL SPECIFICATION AND COLOR	MATING CONNECTOR	VOL CM³
15324054	A3	-		101	M3592001 PA66 HS IM-BLK	15324056	3.265
12064871	C3	-		102	M3592008 PA66 HS IM-BLU	12064872	3.265
12064769	04	-		101	M3592024 PA66 HS IM-CRM	12064770	3.265

SYMBOL DEFINITION			MISSING NUMBERS
A DIMENSION WITHOUT AN INSPECTION REPORT SYMBOL [ ] DOES NOT REQUIRE INSPECTION. IT MAY BE CONTROLLED ON AN INDIVIDUAL COMPONENT DRAWING.	TOTAL NO. OF SYMBOLS ON DRAWING	61	1-9,
	LAST NO. USED	194	

CHG STATUS					ZONE	REVISION HISTORY	AUTH	DR	APVD	APVD 2
DATE	STS	REV	N/P	CHG						
050ED1	R	01	-	-		ALL PARTS - REVISED MAT'L SPEC AND ADDED LOGO AND MATERIAL RECYCLING CODE NOTES	218198	HH	EDV	DMC
25JA02	R	02	-	-		ALL PARTS - PROCESS SENSITIVE DIMENSION WAS 34	220105	HH	EDV	DMC
21MR06	R	03	-	-		12064769 - MAT'L SPEC WAS M3592002	278014	JDA	FRG	PTP

DELPHI

DELPHI PACKARD ELECTRIC SYSTEMS
WARREN, OH

		DATE
DR		
APVD1	J. REEVES	24SEB7
APVD2	F. HESTON	29SEB7
APVD3	S. A. NORLING	08OCB7
APVD4		
APVD5		

SUBSTANCES OF CONCERN: NO RECYCLED CONTENT PER DELPHI (2PA900)

MATERIAL: SEE CHART

DRAWING NAME: TAXI CONN F M/P 150

DRAWING NUMBER: 12065165

SIZE	SCALE	SHEET NO	SHEETS	MATERIAL	REV	N/P
A1x3	4:1	1 OF 2	1 OF 1	R	03	-

DWG TYPE: PART DRAWING

STYLE

VOLUME CONT: SEE CHART

DISTR CODE: D

UNLESS OTHERWISE SPECIFIED

THIS DOCUMENT IS IN ACCORDANCE WITH ASME Y14.100-1998 AS MODIFIED BY DELPHI. SUBMISSIONS TO DELPHI MUST BE IN ACCORDANCE WITH ASME Y14.100-1998 AS MODIFIED BY DELPHI. ALL DIMENSIONS AND NOTES MUST BE VISIBLE AND LEGIBLE. ALL DIMENSIONS MUST BE DEFINED OR DERIVABLE. ALL DIMENSIONS MUST BE DEFINED BY LOCATING TOLERANCES. ALL DIMENSIONS ARE IN MILLIMETERS

REFERENCE

(40) PROCESS SENSITIVE DIMENSION

DIMENSIONS ENCLOSED IN ( ) INDICATE REFERENCE DIMENSION, NO AS TOLERANCE LIMITS ARE ESTABLISHED

DIMENSIONAL RANGE (MM)									
FROM	0	3	6	30	120	315	1000	2000	4000
TO	3	6	30	120	315	1000	2000	4000	8000
TOLERANCE	0.05	0.1	0.2	0.3	0.4	0.5	0.6	0.7	0.8

TOLERANCE UNLESS OTHERWISE SPECIFIED
(±0.15) (±0.4) (±0.1) (±0.4) (±0.2) (±0.8) (±1) (±1.2)
ANGULAR TOLERANCE ±2°

THIRD ANGLE PROJECTION

DO NOT SCALE

USE MATH DATA

THIS DRAWING IS THE PROPERTY OF DELPHI PACKARD ELECTRIC SYSTEMS. REPRODUCTION OR DISCLOSURE TO THIRD PARTIES WITHOUT WRITTEN PERMISSION IS PROHIBITED.

12065165