SYMBOL DEFINITION		MISSING NUMBERS
A DIMENSION WITHOUT AN INSPECTION REPORT SYMBOL [ ] DOES NOT REQUIRE INSPECTION. IT MAY BE CONTROLLED ON AN INDIVIDUAL COMPONENT DRAWING.	TOTAL NO. OF SYMBOLS ON DRAWING: 21	
	LAST NO. USED: 34	

DWG STATUS DATE	STG	REV	N/P	CHG	ZONE	REVISION HISTORY	AUTH	DR	APVD 1	APVD 2
17JL02	R	01	-	-		CLEARED REV COLUMN; 12034295 - ADDED: DELPHI LOGO NOTE & RECYCLING CODE NOTE AND REVISED MAT'L SPEC	227862	JOR	RH	ET
20SE02	R	02	-	-		12034295 - MAT'L SPEC WAS M3596002 PA6 BLK	230898	KGP	RVP	JH
30SE02	R	03	-	-		ALL PARTS - UPDATED PDM ATTRIBUTES & REVISED TOLERANCE (2 PLCS)	231351	KGP	RVP	JH
09OC03	R	04	-	-		ADDED TOLERANCES FOR DIMS #1 THRU 8.	247249	MEL	MEL	JAB

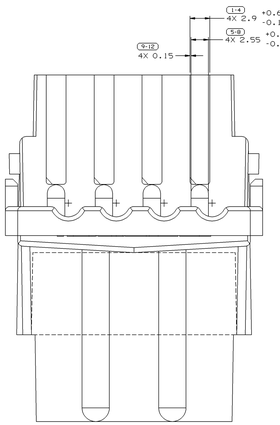

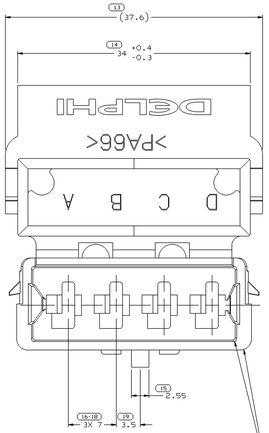

(20) NO BURRS OR FLASH PERMITTED IN THE ENTIRE AREA AROUND THE CONNECTOR ON THE INSIDE OR OUTSIDE OF THE CONNECTOR EDGE

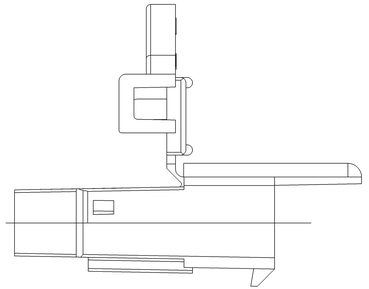

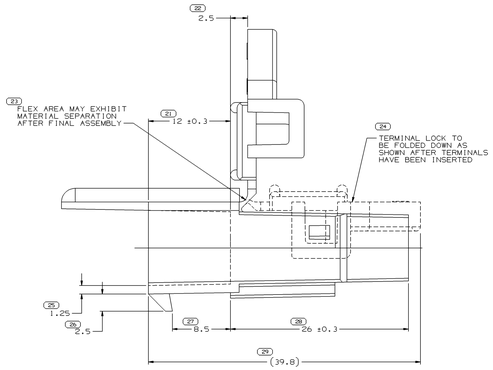

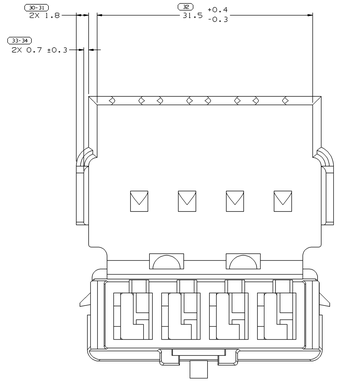

NOTES

1. UNLESS OTHERWISE SPECIFIED AND/OR INDICATED:
   DIMENSIONS ARE TO FACE OF VIEW SHOWN AND AUTOMATICALLY ROUNDED BY COMPUTER FOR INSPECTION. (SEE MATH MODEL FOR PRECISE DIMENSIONS.) FOR ALL OTHER DIMENSIONS NOT SHOWN BUT REQUIRED FOR TOOL BUILD, SEE MATH MODEL FOR PRECISE TOOL PATH DATA.
2. MATING COMPONENTS OR EQUIVALENT:
   CONNECTOR 12015664
3. THIS PART ACCEPTS THE FOLLOWING COMPONENTS OR EQUIVALENT:
   CAVITIES TO ACCEPT 12020125 TERMINAL
4. MATERIAL RECYCLING CODE 3PA66< PER SAE J1344. (2.31X10.1) RAISED CHARACTERS AS SHOWN TO BE LOCATED ON ANY EXTERIOR SURFACE. OPTIONAL CONSTRUCTION TO BE NO MATERIAL RECYCLING CODE.
5. (2.31X10.1) RAISED DELPHI CORPORATE BRAND TO BE LOCATED ON ANY EXTERIOR SURFACE, PREFERABLY VISIBLE AT FINAL ASSEMBLY. OPTIONAL CONSTRUCTION TO BE "PED" OR NO LOGO.

DRAWING NUMBER							
12059372							
SIZE	SCALE	FRAME NO	SHEET NO	STG	REV	N/P	
A1x3	5:1	2 OF 2	1 OF 2	R	04	-	

PART NO	STG	REV	N/P	STATUS	MATERIAL SPECIFICATION AND COLOR	VOLUME CM³
12034295	R	04	AB		M3592001 PA66 HS IM BLK	8.951

DWG TYPE	PART DRAWING
STYLE	
VOLUME (CM³)	SEE CHART
SYSTEM CODE	
ROUTING	6901

UNLESS OTHERWISE SPECIFIED

THIS DOCUMENT IS IN ACCORDANCE WITH ASME Y14.5M-1994 UNLESS OTHERWISE SPECIFIED. DIMENSIONS AND TOLERANCING ASSUME (-DPS) ALL GEOMETRIC TOLERANCES AND RELATED DATUMS APPLY AFTER FINISH(EXCEPT FORM #1 TOLERANCE). ALL DIMENSIONS AND TOLERANCES MUST BE ESTABLISHED BY INSPECTION OR LOCATION TOLERANCES. ALL DIMENSIONS AND TOLERANCES ARE INDEPENDENT, REGARDLESS OF DATUM REFERENCE.
ALL DIMENSIONS ARE IN MILLIMETERS

(27) PROCESS SENSITIVE DIMENSION

DIMENSION ENCLOSED IN ( ) INDICATE REFERENCE DIMENSIONS AND NO TOLERANCE UNITS MILLIMETERS

DIMENSIONAL RANGE (MM)									
FROM	0	>3	>6	>30	>10	>100	>200	>500	>800
TO	3	6	30	6	100	200	500	800	
TOLERANCE UNLESS OTHERWISE SPECIFIED									
±0.15	±0.2	±0.3	±0.4	±0.5	±0.8	±1	±1.2		
ANGULAR TOLERANCE ±2°									

R 0.1 MAX
R 0.2 MAX
SHARP CORNER TOLERANCE

THIRD ANGLE PROJECTION

DO NOT SCALE

USE MATH DATA

DELPHI

DELPHI PACKARD ELECTRIC SYSTEMS
WARREN, OH

	DATE
DR APVD1 T.KRAUSE	04FEB05
APVD2 F.HESTON	14MAR05
APVD3 MANGIAULLI	15MAR05
APVD4	
APVD5	

SUBSTANCES OF CONCERN: PVC RECYCLED CONTENT PER DELPHI (DP4900)

MATERIAL: SEE CHART

DRAWING NAME: TAXI CONN M/P 630

DRAWING NUMBER							
12059372							
SIZE	SCALE	FRAME NO	SHEET NO	STG	REV	N/P	
A1x3	5:1	1 OF 2	1 OF 2	R	04	-	

ISO2E3S