DO NOT SCALE

PART NO 1219 1158

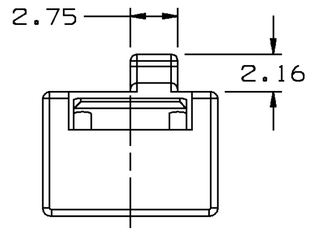

TYPE 102

SAME AS TYPE 101
EXCEPT AS SHOWN

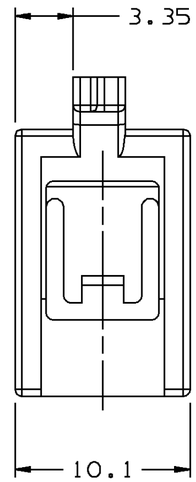

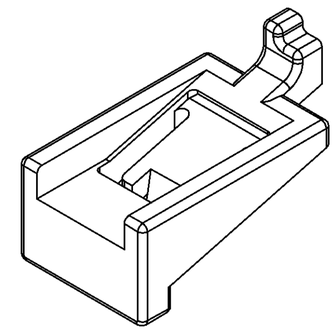

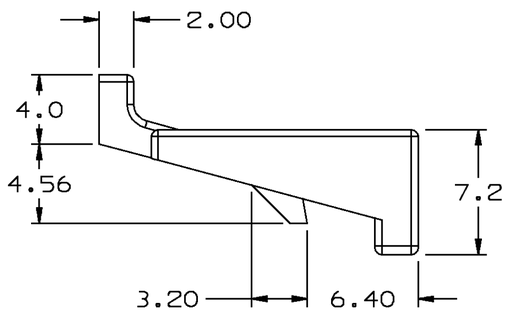

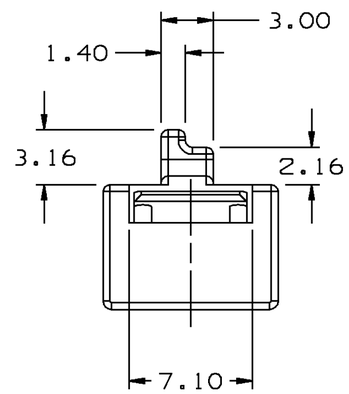

TYPE 101

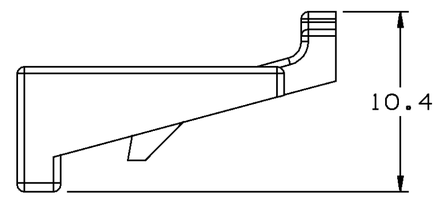

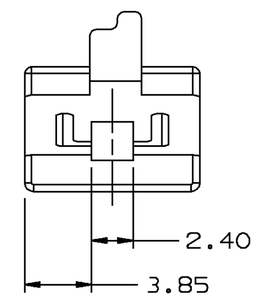

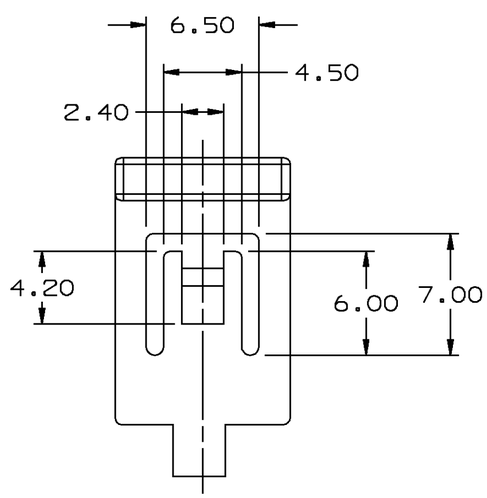

DATE	SYM	REVISION RECORD	AUTH	DR	CK
08JN95	—	12160895 WAS SEPARATE			
		"A1" SIZE DWG	166189	HBT	WTP
08JN95	—	12191159 RELEASED			
		TO REV "A"	950005	HBT	WTP

PART NO 1219 1158

12191159	A		102	R0061931 PA6 NAT	12160893	0.437
12160895	B		101	R0064366 PA6 GRA MD	12160894	0.442
PART NO	REV	STATUS	TYPE	MATERIAL SPEC & COLOR	MATING CONNECTOR	VOL CM³

PACKARD ELECTRIC DIVISION
GENERAL MOTORS CORPORATION
WARREN, OHIO

Unigraphics II

THIRD ANGLE PROJECTION

METRIC
DIMENSIONS ARE IN MILLIMETERS UNLESS OTHERWISE SPECIFIED

TOLERANCE UNLESS OTHERWISE SPECIFIED
DECIMAL: ANGULAR ± 2°
ONE PLACE ± 0.3
TWO PLACE ± 0.15

CODE NO 6900
QC
DES

DWG DATE 08JN95
DR H. BARREIRO 08JN95
SCALE 4:1
CK W.TURNBULL 14JN95
REFERENCE NO 12191158 "A1" SIZE
APPR
VOL CM³ SEE CHART
MATERIAL SPEC SEE CHART
NAME TPA 1F MAXI
PART NUMBER 1219 1158
PRODUCT INFORMATION DWG
SIZE A2