DO NOT SCALE

PART NO 1214 6817

DATE	SYM	REVISION RECORD	AUTH	DR	CK
14JN93	A	P.I.D. CREATED	930012	RKR	RKR
20AU93	A1	WAS PE040748 & RELEASED	930005	RKR	RKR
26NO93	A2	REVISED	930017	RPC	TLM
04AU94	B	INDEXING FEATURE ADDED	161766	JMH	DME
05AU96	B1	REVISED GRAPHICS	173863	RRS	RRS

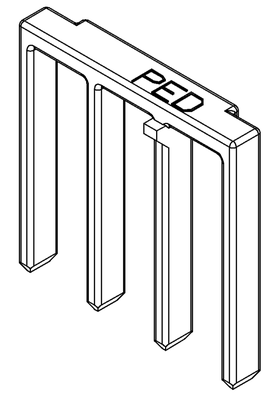

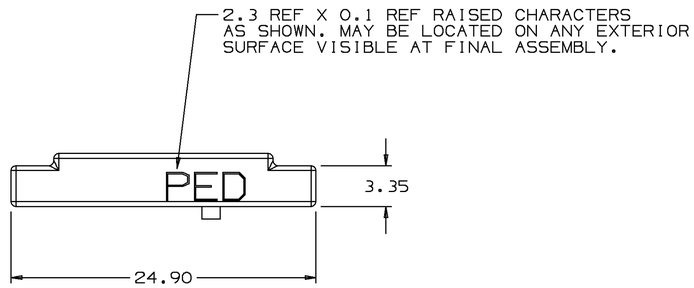

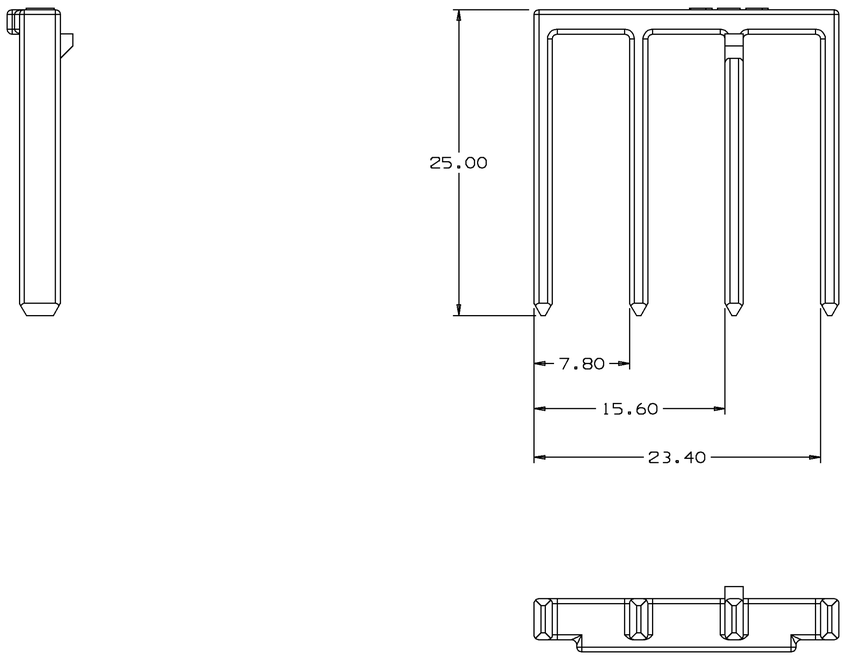

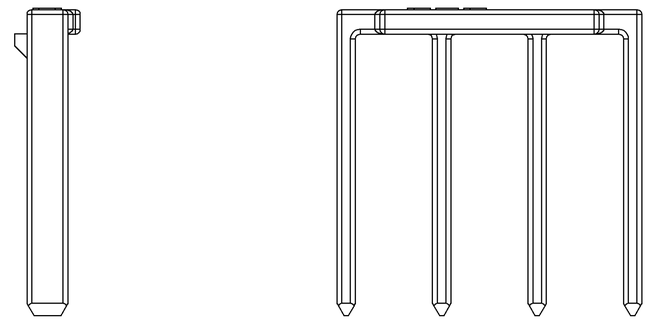

PART NO 1214 6817

NOTES — 1. THIS PART MATES TO 12146815 CONVENIENCE CENTER

2. UNLESS OTHERWISE SPECIFIED AND/OR INDICATED:
DIMENSIONS ARE TO FACE OF VIEW SHOWN AND
AUTOMATICALLY ROUNDED BY COMPUTER FOR INSPECTION.
(SEE MATH MODEL FOR PRECISE DIMENSION)

PACKARD ELECTRIC DIVISION
GENERAL MOTORS CORPORATION
WARREN, OHIO

Uigraphics II	METRIC DIMENSIONS ARE IN MILLIMETERS UNLESS OTHERWISE SPECIFIED
THIRD ANGLE PROJECTION	TOLERANCE UNLESS OTHERWISE SPECIFIED DECIMAL: ANGULAR ± 2° ONE PLACE ± 0.3 TWO PLACE ± 0.15
CODE NO 6901 / QC	DES DAN HUFF 14JN93
DWG DATE 14JN93	DR RICHARD RACZ 14JN93
SCALE 4:1	CK RICHARD RACZ 14JN93
REFERENCE NO 1214 6817 "A1" SIZE	APPR G HERLINGER 22JN93
	VOL CM³ 0.643
MATERIAL SPEC R0071790 PA66 HS IM-BLU	
NAME COMB	
PART NUMBER 1214 6817 PRODUCT INFORMATION DWG	SIZE A1

/users/qdc/cacrrs01
TIME: 4:27 DATE: 8-- 5--96

USERID: cacrrs01
NAME: 12146817-b1-mpd.prt