SYMBOL DEFINITION		
A DIMENSION WITHOUT AN INSPECTION REPORT SYMBOL ( ) DOES NOT REQUIRE INSPECTION. IT MAY BE CONTROLLED ON THE INDIVIDUAL COMPONENT DRAWING.	TOTAL NO OF INSPECTIONS REQUIRED	30
	LAST NO. USED	25

MISSING SYMBOLS
15-16 19 21

DWG STATUS					ZONE	REVISION HISTORY	AUTH	DR	APVD 1	APVD 2
DATE	STG	REV	N/P	CHG						
28FE05	R	01	-	-		RELEASED	265293	END	END	JU
05MY05	R	01	AA	-		ADDED DIMS #23-25 AND KPC TO DIMS #9 & #22; REMOVED DIMS #15, #16, #19 & #21 AND REVISED TOLERANCES ON DIMS #13 & #22	267979	AKJ	AKJ	JCU
13JN05	R	01	AB	-		13.7 +0.15/-0.11 WAS 13.7 +0.15/-0.1 AND 13.42 +0.1/-0.11 TYP WAS 13.42 ±0.1 TYP	269216	GPS	JAA	RMF
30JN05	R	02	-	-		Ø23.13±0.15 WAS Ø23.34±0.15, 3.15 CONSTANT WAS 3 CONSTANT & 4X 0.9±0.15 WAS 4X 0.9±0.1	269856	MAC	MAC	RF

KEY PRODUCT CHARACTERISTICS			
SAFETY/COMPLIANCE	FIT/FUNCTION	TOTAL ON DRAWING	2
S/C CHECKPOINTS	F/F CHECKPOINTS	LAST NO. USED	2

NO & TYPE	DESCRIPTION	RATIONALE	PTS	ZONE
1 F/F	O-RING SEALING SURFACE	CONTROL SEALING SURFACE DIMENSION	-	D11
2 F/F	BLADE THICKNESS	BLADE POSITION ASSURANCE	-	D12

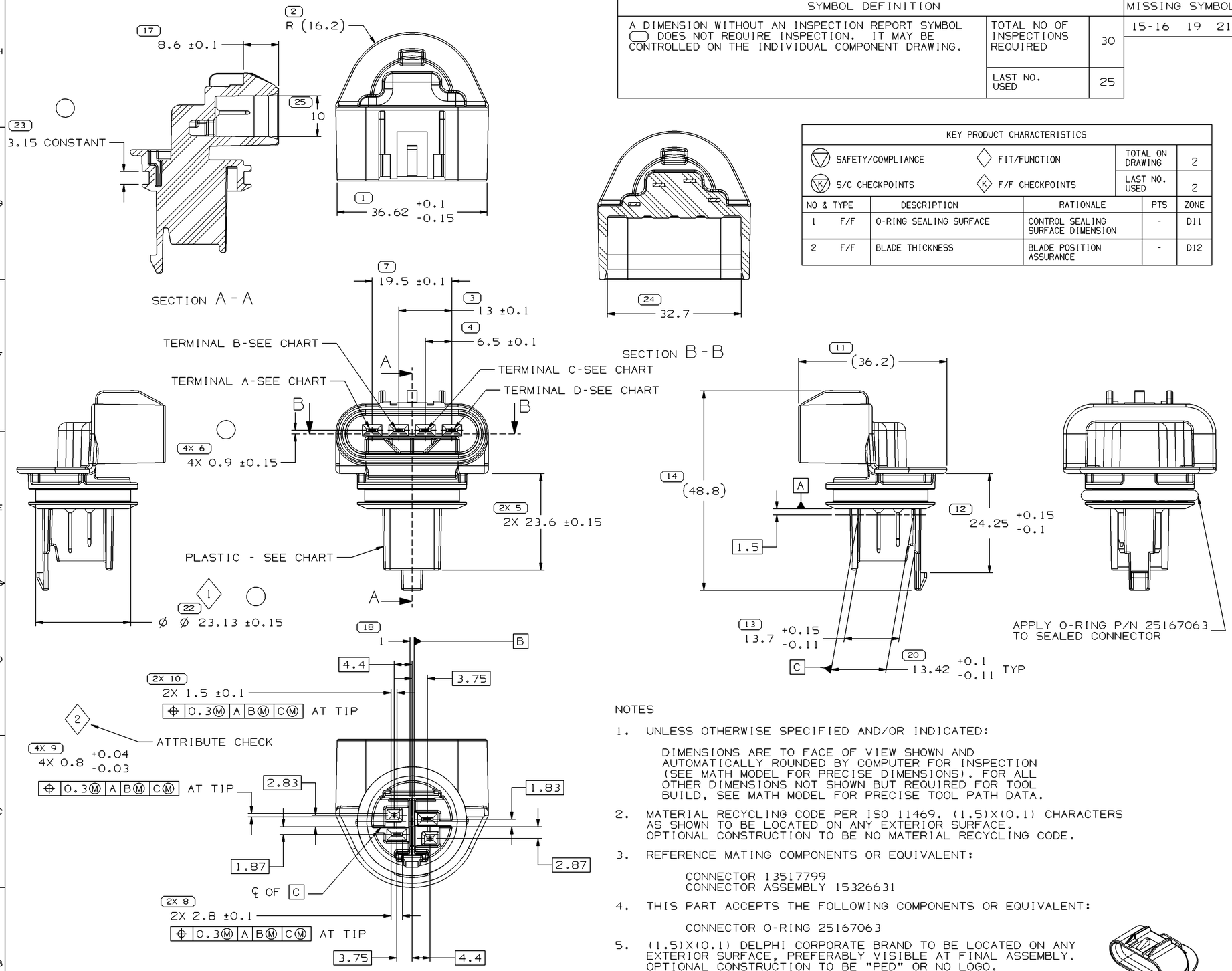

NOTES

1. UNLESS OTHERWISE SPECIFIED AND/OR INDICATED:

   DIMENSIONS ARE TO FACE OF VIEW SHOWN AND AUTOMATICALLY ROUNDED BY COMPUTER FOR INSPECTION (SEE MATH MODEL FOR PRECISE DIMENSIONS). FOR ALL OTHER DIMENSIONS NOT SHOWN BUT REQUIRED FOR TOOL BUILD, SEE MATH MODEL FOR PRECISE TOOL PATH DATA.

2. MATERIAL RECYCLING CODE PER ISO 11469. (1.5)X(0.1) CHARACTERS AS SHOWN TO BE LOCATED ON ANY EXTERIOR SURFACE. OPTIONAL CONSTRUCTION TO BE NO MATERIAL RECYCLING CODE.

3. REFERENCE MATING COMPONENTS OR EQUIVALENT:

   CONNECTOR 13517799
   CONNECTOR ASSEMBLY 15326631

4. THIS PART ACCEPTS THE FOLLOWING COMPONENTS OR EQUIVALENT:

   CONNECTOR O-RING 25167063

5. (1.5)X(0.1) DELPHI CORPORATE BRAND TO BE LOCATED ON ANY EXTERIOR SURFACE, PREFERABLY VISIBLE AT FINAL ASSEMBLY. OPTIONAL CONSTRUCTION TO BE "PED" OR NO LOGO.

6. AUDIT TEST:
   PARTS SHALL BE SEALED SUCH THAT WHEN SUBJECTED TO A PRESSURE OF 6 PSI, THERE SHALL BE NO LEAKAGE AS SHOWN BY A SERIES OF RISING BUBBLES. A SERIES OF RISING BUBBLES IS DEFINED AS TWO OR MORE BUBBLES WITHIN 30 SECONDS.

7. WHEN PARTS ARE SHIPPED THEY MUST BE PACKED IN PLASTIC BAGS OR SHIPPING CONTAINERS MUST BE LINED WITH PLASTIC LINERS. BAGS OR LINERS MUST BE SEALED TO AVOID FOREIGN MATTER.

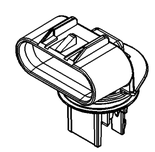

PART TYPE	SIZE	SPEC
PLASTIC	-	M0682002 POM-K COP NAT
TERMINAL D	0.8 X 40.1	CDA-210, EXTRA SPRING TEMPER
TERMINAL C	0.8 X 45.5	CDA-210, EXTRA SPRING TEMPER
TERMINAL B	0.8 X 45.0	CDA-210, EXTRA SPRING TEMPER
TERMINAL A	0.8 X 39.3	CDA-210, EXTRA SPRING TEMPER
	MATERIAL	

(22) PROCESS SENSITIVE DIMENSION

DIMENSIONS ENCLOSED IN ( ) INDICATE REFERENCE DIMENSIONS AND NO TOLERANCE LIMITS ARE ESTABLISHED

DIMENSIONAL RANGE (MM)									CHART E1
FROM TO	> 0 20	> 20 30	> 30 70	> 70 100	>100 150	>150 200	>200 250	>250 300	>300 400
TOLERANCE UNLESS OTHERWISE SPECIFIED									
	±0.15	±0.2	±0.3	±0.4	±0.5	±0.6	±0.8	±1	±1.2
ANGULAR TOLERANCE ±2°									

DWG TYPE: PART DRAWING

STYLE

VOLUME (CM³): 9.547

DISTR CODE: D

UNLESS OTHERWISE SPECIFIED

THIS DOCUMENT IS IN ACCORDANCE WITH ASME Y14.5M-1994 AS AMENDED BY THE GM GLOBAL DIMENSIONING AND TOLERANCING ADDENDUM-2001. SEPARATE PATTERNS OF FEATURES MAY BE GAGED SEPARATELY REGARDLESS OF DATUM REFERENCES.

ALL DIMENSIONS ARE IN MILLIMETERS

REFERENCE

THIRD ANGLE PROJECTION

DO NOT SCALE

USE MATH DATA

CAD UG UNIGRAPHICS

DELPHI

DELPHI PACKARD ELECTRIC SYSTEMS
WARREN, OH

		DATE
DR		
APVD1	E.NEAL DUNHAM	28FE05
APVD2	E.NEAL DUNHAM	28FE05
APVD3	J.C.URREA	28FE05
APVD4		
APVD5		

SUBSTANCES OF CONCERN AND RECYCLED CONTENT PER DELPHI 10949001

MATERIAL
SEE CHART

DRAWING NAME
CONN 4 M GT 280 M/P 150 280 COUPLING

DRAWING NUMBER
13516627

SIZE	SCALE	FRAME NO	SHEET NO	STG	REV	N/P
A1	2:1	1 OF 1	1 OF 1	R	02	-