SYMBOL DEFINITION		
A DIMENSION WITHOUT AN INSPECTION REPORT SYMBOL DOES NOT REQUIRE INSPECTION. IT MAY BE CONTROLLED ON THE INDIVIDUAL COMPONENT DRAWING.	TOTAL NO OF INSPECTIONS REQUIRED	14
	LAST NO. USED	14

MISSING SYMBOLS
NO MISSING SYMBOL NUMBER

CHG STATUS					ZONE	REVISION HISTORY	AUTH	DR	APVD	APVD
DATE	STA	REV	PLP	CHG					1	2
26AP04	R	B1	-	-		CLERED REV COL, REDRAWN TO PD, UPDATED GRAPHICS AND ADDED USCAR COMPLIANCE SUPPLEMENT TO NOTE #2	255278	DCV	JAA	MJC
10JN04	R	B2	-	-		ADDED NOTE	255783	GPS	JWM	MJC
13OC04	R	B3	-	-		125.1 MAS 25 ±0.1/. 50.8 +0.6/-0.3 MAS 50.8	260099	ADK	KDR	MJC
22MR07	R	B4	-	-		UPDATED PDM ATTRIBUTES	400950	EDS	AUG	DGJ

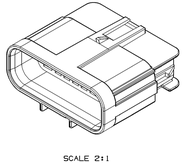

SCALE 2:1

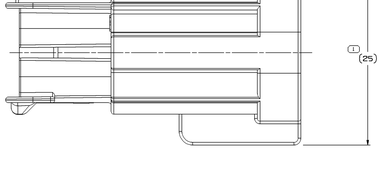

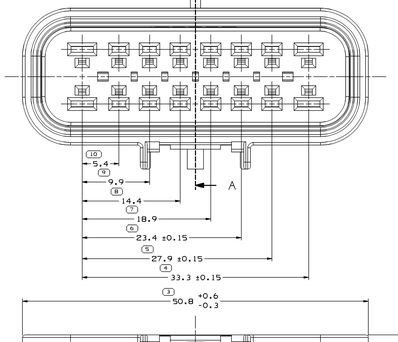

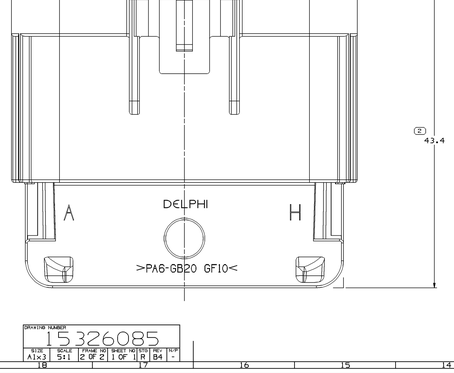

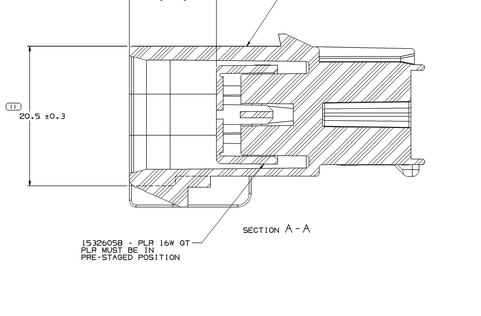

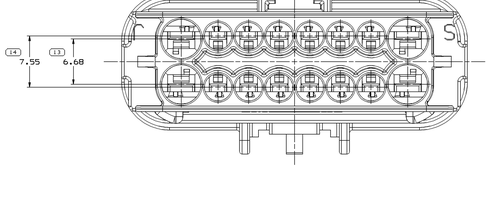

NOTES

1. UNLESS OTHERWISE SPECIFIED AND/OR INDICATED:

   DIMENSIONS ARE TO FACE OF VIEW SHOWN AND AUTOMATICALLY ROUNDED BY COMPUTER FOR INSPECTION (SEE MATH MODEL FOR PRECISE DIMENSIONS). FOR ALL OTHER DIMENSIONS NOT SHOWN BUT REQUIRED FOR TOOL BUILD. SEE MATH MODEL FOR PRECISE TOOL PATH DATA.

2. REFERENCE MATING COMPONENTS OR EQUIVALENT:

   CONNECTOR ASM 15326084
   SECONDARY TERMINAL LOCK 15326059
   THIS CONNECTION MEETS OR EXCEEDS SAE/ USCAR-2 AUGUST 1997, SECTION 5.3.1.2. TERMINAL DISENGAGE CRITERIA WITHOUT THE APPLICATION OF A TERMINAL POSITION ASSURANCE (TPA) SECONDARY LOCK.

   THIS CONNECTION MEETS OR EXCEEDS SAE/ USCAR-2 AUGUST 1997, SECTION 5.3.1.2. TERMINAL DISENGAGE CRITERIA WITH THE APPLICATION OF A TERMINAL POSITION ASSURANCE (TPA) SECONDARY LOCK. (SEE MATING COMPONENTS FOR APPROPRIATE TPA).

3. LETTERS I, O AND Q ARE NOT USED AS CAVITY ID'S.

DRAWING NUMBER							
15326085							
SIZE	SCALE	PAGE NO	SHEET NO	TYPE	PREF	SUP	
A1x3	5:1	2 OF 2	1 OF 1	R	B4	-	

N/A	PROCESS SENSITIVE DIMENSION
DIMENSIONS ENCLOSED IN ( ) INDICATE REFERENCE DIMENSIONS AND HAVE NO TOLERANCE LIMITS AND ESTIMATIONS	

ALTERNATIVE ROUND UNITS											
FROM	0	2	20	2	20	50	50	100	100	1000	1000
TO	2	20	50	20	50	100	100	1000	1000	2000	2000
ROUND TO	0.1	1	5	1	5	10	10	100	100	500	1000

TOLERANCE UNLESS OTHERWISE SPECIFIED
[10.15] [0.4] [0.01] [0.4] [0.01] [0.8] [0.03] [1] [1.2]
ANGULAR TOLERANCE ±2°

THIRD ANGLE PROJECTION

DO NOT SCALE

SEE MATH DATA

DWG TYPE: PART DRAWING

STYLE

VOLUME (CM³)

SIZE: D

UNLESS OTHERWISE SPECIFIED

THIS DOCUMENT IS IN ACCORDANCE WITH ASME Y14.100-1998 AS ENDORSED BY ISO/IEC 8824 (ASN.1). THE DATA CONTAINED HEREIN IS PROPRIETARY TO DELPHI. ANY REPRODUCTION OF THIS DOCUMENT OR THE DATA CONTAINED HEREIN, IN WHOLE OR IN PART, IN ANY FORM OR MEDIUM WITHOUT EXPRESS WRITTEN PERMISSION OF DELPHI IS STRICTLY PROHIBITED. ALL RIGHTS RESERVED UNDER THE COPYRIGHT LAWS OF THE UNITED STATES. THIS DOCUMENT CONTAINS TRADE SECRETS AND COMMERCIAL INFORMATION THAT COULD BE DAMAGING TO DELPHI IF DISCLOSED OR REPRODUCED. ALL DIMENSIONS ARE IN MILLIMETERS

REFERENCE

DELPHI

DELPHI PACKARD ELECTRICAL/ELECTRONIC ARCHITECTURE
WARREN, OH

		DATE
DR		
APVD1	H. CASTRILLON	04JL97
APVD2	J VAZQUEZ S	05JL97
APVD3	L. LOPEZ	01AU97
APVD4		
APVD5		

SUBSTANCES OF CONCERN AND RECYCLED CONTENT PER DELPHI (DP4950)

MATERIAL: SEE DRAWING

DRAWING NAME: ASM CONN 16 M GT 150 280 SLD

DRAWING NUMBER							
15326085							
SIZE	SCALE	PAGE NO	SHEET NO	TYPE	PREF	SUP	
A1x3	5:1	1 OF 2	1 OF 1	R	B4	-	

15326085