SYMBOL DEFINITION	MISSING NUMBERS	
A DIMENSION WITHOUT AN INSPECTION REPORT SYMBOL ( ) DOES NOT REQUIRE INSPECTION. IT MAY BE CONTROLLED ON AN INDIVIDUAL COMPONENT DRAWING.	TOTAL NO. OF SYMBOLS ON DRAWING	24
	LAST NO. USED	42

14-20,

DWG STATUS DATE	STS	REV	N/P	CHG	ZONE	REVISION HISTORY	AUTH	DR	APVD 1	APVD 2
20SE00	R	001	-	-		CLEARED REV COLUMN; ALL PARTS - REDRAWN TO PD	000009	EVV	001	JRH
05MY05	R	02	-	-		ALL PARTS - CORRECTED DIM R 3.5 +/-0.3 WAS 8X R 4 +/-0.3	267607	MDH	JWM	MDM

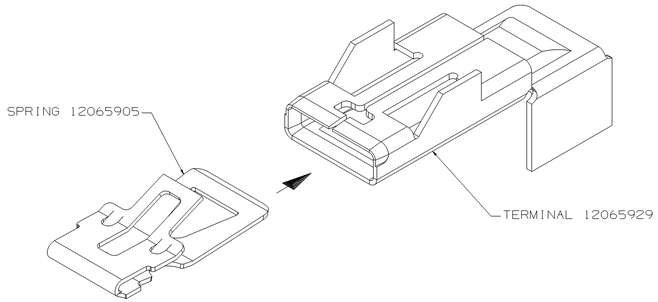

STANDARD ASSEMBLY
SCALE 10:1

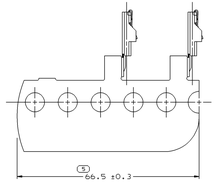

TYPE 101
SAME AS TYPE 104
EXCEPT AS SHOWN
SCALE 2:1

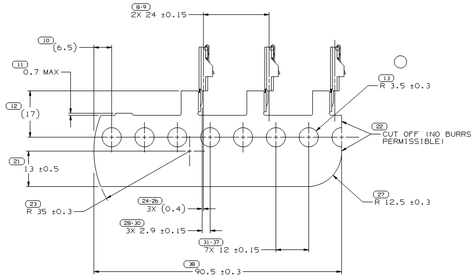

TYPE 104
SCALE 2:1

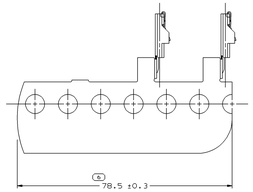

TYPE 102
SAME AS TYPE 104
EXCEPT AS SHOWN
SCALE 2:1

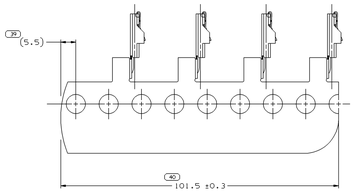

TYPE 105
SAME AS TYPE 104
EXCEPT AS SHOWN
SCALE 2:1

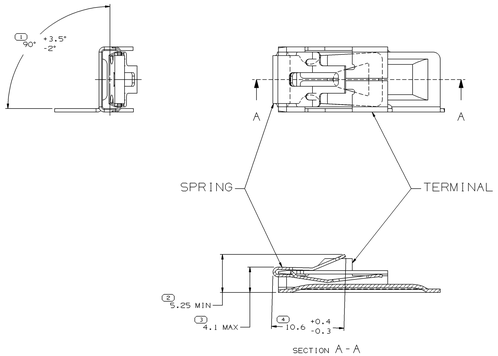

STANDARD BUSS TERMINAL ASSEMBLY

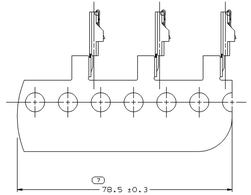

TYPE 103
SAME AS TYPE 104
EXCEPT AS SHOWN
SCALE 2:1

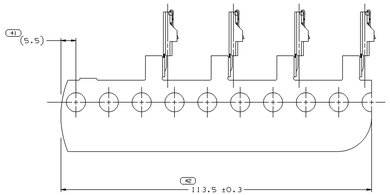

TYPE 106
SAME AS TYPE 104
EXCEPT AS SHOWN
SCALE 2:1

VIEW SCALE DOES NOT REFLECT
ACTUAL PART SIZE

NOTES

1. UNLESS OTHERWISE SPECIFIED AND/OR INDICATED:

   DIMENSIONS ARE TO FACE OF VIEW SHOWN AND AUTOMATICALLY ROUNDED BY COMPUTER FOR INSPECTION (SEE MATH MODEL FOR PRECISE DIMENSIONS). FOR ALL OTHER DIMENSIONS NOT SHOWN BUT REQUIRED FOR TOOL BUILD, SEE MATH MODEL FOR PRECISE TOOL PATH DATA.

2. TERMINALS TO BE USED WITH 12065900 FUSE BLOCK OR EQUIVALENT.
3. THIS PART REQUIRES SPECIAL PACKAGING.
4. SPRING RETENTION TO TERMINAL IN DIRECTION OF LOCK TANG ENGAGEMENT TO BE 7ON MINIMUM.
5. RECOVERY NOTE - AFTER INSERTION INTO A 4.3 FUNCTIONAL GAGE, 5.25 MIN TANG MUST RECOVER TO A MINIMUM OF 5.
6. MATING BLADE MAXIMUM ENGAGE IS 55N, MINIMUM ENGAGE IS 18N (EACH TERMINAL).
7. MATING COMPONENTS OR EQUIVALENT:
   MAX:FUSE 12065938

ASM PART NO	REV	N/P	STATUS	TYPE
12146564	A3	-		106
12146182	A3	-		102
12129481	A3	-		101
12129356	A3	-		103
12077570	C3	-		104
12065930	C3	-		105

DRAWING NUMBER							
12084935							
SIZE	SCALE	FRAME NO	SHEET NO	STS	REV	N/P	
A1x3	5:1	2 OF 2	1 OF 2	R	02	-	

DWG TYPE	PART DRAWING
STYLE	
VOLUME (CM³)	SYSTEM CODE

UNLESS OTHERWISE SPECIFIED
THIS DOCUMENT IS IN ACCORDANCE WITH ASME Y14.5M-1994 UNLESS OTHERWISE SPECIFIED. GENERAL DIMENSIONAL TOLERANCES ARE PER ASME Y14.5M-1994. SURFACE FINISHES OF FEATURES MAY BE GAGED SEPARATELY REGARDLESS OF DATUM REFERENCES.

ALL DIMENSIONS ARE IN MILLIMETERS

PROCESS SENSITIVE DIMENSION

REFERENCE

DIMENSIONS ENCLOSED IN ( ) INDICATE REFERENCE DIMENSIONS AND NO TOLERANCE IS APPLIED TO THEM.

DIMENSIONAL RANGE (MM)	CHART 'C'
0 TO 12	>12
TOLERANCE UNLESS OTHERWISE SPECIFIED	±0.4
ANGULAR TOLERANCE ±2°	

THIRD ANGLE PROJECTION

DO NOT SCALE

USE MATH DATA

DELPHI

DELPHI PACKARD ELECTRIC SYSTEMS
WARREN, OH

	DATE
DR APVD1 ANDY LE	04JN97
APVD2 F. HESTON	21JN98
APVD3 A. HERRMANN	23JN98
APVD4	
APVD5	

SUBSTANCES OF CONCERN: PVC RECYCLED CONTENT PER DELPHI (DP4900)

MATERIAL
SEE DRAWING

DRAWING NAME
TAXI TERM FUSE MAXI

DRAWING NUMBER							
12084935							
SIZE	SCALE	FRAME NO	SHEET NO	STS	REV	N/P	
A1x3	5:1	1 OF 2	1 OF 2	R	02	-	

12084935