DO NOT SCALE

TEMPORARY PRODUCTION PRINT
SEE ROUTING DISTRIBUTION
FOR APPROVALS
203050

PART NO
1217 6640

DATE	SYM	REVISION RECORD	AUTH	DR	CK
19DE94	A	WAS PE044313 & RELEASED	940005	FDS	FDS
08MY95	B	REVISED	165899	JVS	AUG
11AU95	C	REVISED MATERIAL SPEC	167708	JVM	JGS
07DE95	D	REVISED	169852	MVA	MVA
14MY96	D1	REV SYM ADVANCED	172636	ROM	AUG
29AU00	**D2**	**CHANGE TOLERANCE ON**	**203050**		
		DIMENSION 26.6 TO +0.3/-1.8.			
		ADD NOTE			

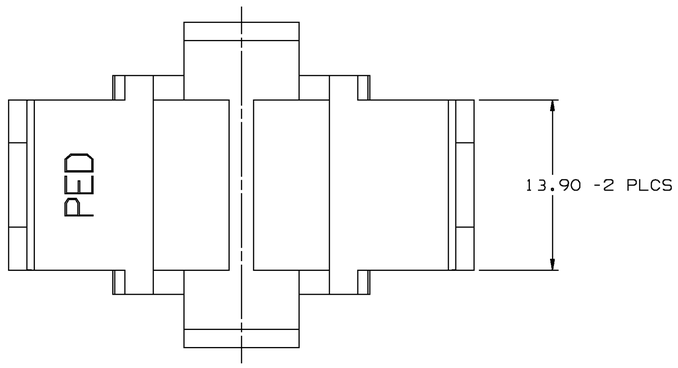

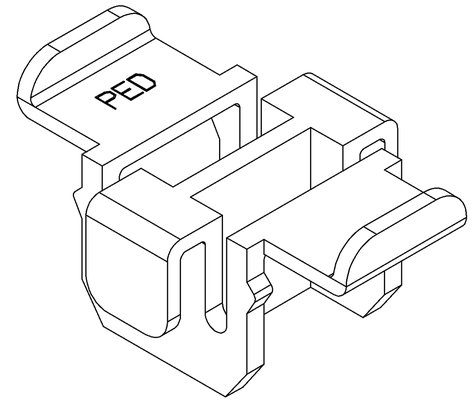

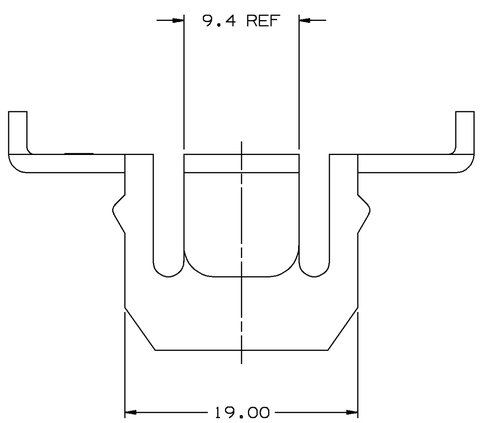

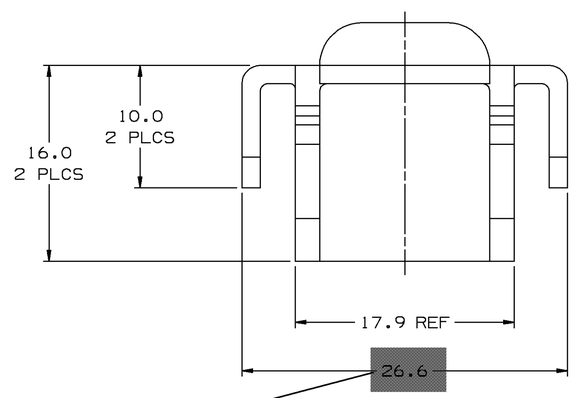

CHANGE TOLERANCE TO +0.3/-1.8

ADD NOTE

NOTES:

1. UNLESS OTHERWISE SPECIFIED AND/OR INDICATED:
   DIMENSIONS ARE TO FACE OF VIEW SHOWN AND
   AUTOMATICALLY ROUNDED BY COMPUTER FOR INSPECTION.
   (SEE MATH MODEL FOR PRECISE DIMENSION)

2. DIMENSIONS MARKED "REF" ARE FOR REFERENCE ONLY
   AND NO TOLERANCE LIMITS ARE ESTABLISHED.

3.- MATING COMPONENTS OR EQUIVALENT:
12161186 CONN 15F 280 M/P.
12161185 SLIDE CONNECTOR.

PART NO
1217 6640

Uigraphics II	METRIC DIMENSIONS ARE IN MILLIMETERS UNLESS OTHERWISE SPECIFIED
THIRD ANGLE PROJECTION	TOLERANCE UNLESS OTHERWISE SPECIFIED DECIMAL: ANGULAR ± 2° ONE PLACE ± 0.3 TWO PLACE ± 0.15
CODE NO / QC	DES GARY DETTER 15NO94
DWG DATE 21NO94	DR J. GARRETSON 21NO94
SCALE 4:1	CK J. GARRETSON 21NO94
REFERENCE NO 12176640 "A1" SIZE	APPR G. DETTER 21NO94
	VOL CM³ 2.405
MATERIAL SPEC R0064398 PP REPELLETIZED - BLK	
NAME SPACER LOCK	
PART NUMBER 1217 6640 PRODUCT INFORMATION DWG	SIZE A1

PACKARD ELECTRIC DIVISION
GENERAL MOTORS CORPORATION
WARREN, OHIO