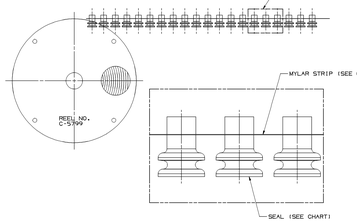

SEAL/MYLAR ASSEMBLY DETAIL
NO SCALE
TYPE 101

NOTES

1. THE MYLAR TAPE IS ONLY A CARRIER USED AS A PROCESS AID AND IS NOT PART OF THE FINAL HARNESS ASSEMBLY.
2. WHEN PARTS ARE SHIPPED, THEY MUST BE PACKED IN PLASTIC BAGS OR SHIPPING CONTAINERS MUST BE LINED WITH PLASTIC LINERS. BAGS OR LINER MUST BE SEALED TO AVOID ENTRY OF FOREIGN MATTER.

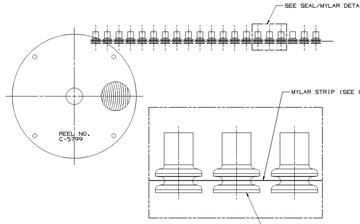

SEAL/MYLAR ASSEMBLY DETAIL
NO SCALE
TYPE 102
SAME AS TYPE 101
EXCEPT AS SHOWN

NOTES

1. THE MYLAR TAPE IS ONLY A CARRIER USED AS A PROCESS AID AND IS NOT PART OF THE FINAL HARNESS ASSEMBLY.
2. WHEN PARTS ARE SHIPPED, THEY MUST BE PACKED IN PLASTIC BAGS OR SHIPPING CONTAINERS MUST BE LINED WITH PLASTIC LINERS. BAGS OR LINER MUST BE SEALED TO AVOID ENTRY OF FOREIGN MATTER.

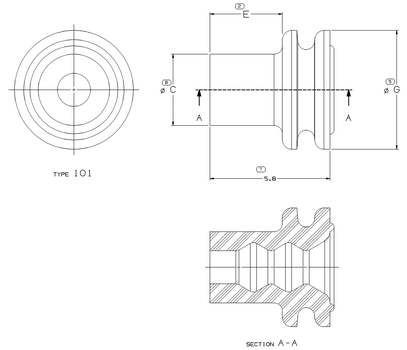

TYPE 101

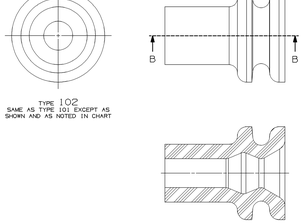

TYPE 102
SAME AS TYPE 101 EXCEPT AS SHOWN AND AS NOTED IN CHART

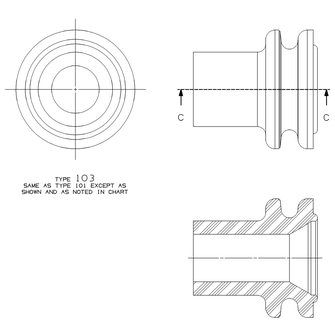

TYPE 103
SAME AS TYPE 101 EXCEPT AS SHOWN AND AS NOTED IN CHART

SYMBOL DEFINITION		MISSING SYMBOLS
A DIMENSION WITHOUT AN INSPECTION REPORT SYMBOL DOES NOT REQUIRE INSPECTION. IT MAY BE CONTROLLED ON THE INDIVIDUAL COMPONENT DRAWING.	TOTAL NO OF INSPECTIONS REQUIRED: 4	1 3-4 6 9
	LAST NO. USED: 9	

GT 150 3.5 CL (3.2 X 4.0 OVAL INTERNAL CAVITY DIAMETER)																							
15473821	01	AE	OBSOLETE	-	-	102	M34690R07		SILICONE, 50 SHORE, 2% 01L	GREEN	2.00-2.20	2.4	3.25	3.9 +0.1/-0.05	0.009	-	-	-	-	-	-	-	-
15366022	01	AL	-	-	-	101	M34690R07	M39010R7	SILICONE, 50 SHORE, 2% 01L	GREEN	1.80-2.00	2.4	3.2	4.10/-0.05	0.041	-	-	-	-	-	-	-	-
15305351	02	AR	-	-	-	101	M34690R06	M39010R6	SILICONE, 50 SHORE, 2% 01L	YELLOW	1.70-2.10	2.4	3.25	3/4	0.033	15305352	A1	-	OBSOLETE	R0275B8	-	-	-
12191226	04	AF	-	RESTRICTED	15366002	102	M34710D7	M20W10D1	SILICONE, 50 SHORE, 4% 01L	GREEN	1.40-1.90	2.8	3.25	4 +0.1/-0.05	0.034	12191155	03	AF	-	-	M32P5002	-	102
CABLE SEAL	REV	N/P	STATUS	USAGE	REPLACED BY	TYPE	MAT'L SPEC	ALTERNATE MATERIAL SPEC	MATERIAL DESCRIPTION	COLOR	CABLE O.D. RANGE	ø C +0.1	E	ø G +0.1	VOL (CM³)	MYLAR & CABLE SEAL ASM	REV	N/P	STATUS	MYLAR STRIP	TYPE		
GT 150 (4.0 INTERNAL CAVITY DIAMETER)																							
15366050	02	AB	-	-	-	102	M34690R08	M39100R8	SILICONE, 50 SHORE, 2% 01L	BLUE	1.80-2.40	2.8	3.5	4.5	0.037	-	-	-	-	-	-	-	-
15366021	01	AA	-	-	-	101	M34690I1	M39101I1	SILICONE, 50 SHORE, 2% 01L	WHITE	1.20-1.90	2.8	3.5	4.5	0.041	-	-	-	-	-	-	-	-
3667445	01	AA	-	-	-	101	M34690I1	-	SILICONE, 50 SHORE, 1% 01L	WHITE	1.20-1.90	2.8	3.5	4.5	0.041	-	-	-	-	-	-	-	-
12191227	04	AB	-	RESTRICTED	15366001	102	M34710D7	M20W10D1	SILICONE, 50 SHORE, 4% 01L	BLUE	1.80-2.40	2.8	3.5	4.5	0.037	12191153	B8	-	-	-	M32P5002	-	102
12191228	010	-	-	RESTRICTED	15366021	101	M34710I1	M20W10I1	SILICONE, 50 SHORE, 4% 01L	WHITE	1.20-1.90	2.8	3.5	4.5	0.041	12191152	B9	-	-	-	M32P5002	-	102
CABLE SEAL	REV	N/P	STATUS	USAGE	REPLACED BY	TYPE	MAT'L SPEC	ALTERNATE MATERIAL SPEC	MATERIAL DESCRIPTION	COLOR	CABLE O.D. RANGE	ø C +0.1	E	ø G +0.1	VOL (CM³)	MYLAR & CABLE SEAL ASM	REV	N/P	STATUS	MYLAR STRIP	TYPE		
GT 280 (5.2 INTERNAL CAVITY DIAMETER)																							
15366064	01	AK	-	-	-	101	M34690J9	M39100J9	SILICONE, 50 SHORE, 2% 01L	PURPLE	1.80-2.40	3.45	3.5	5.75	0.067	-	-	-	-	-	-	-	-
15366051	01	AJ	-	-	-	101	M34690J1	M39101J2	SILICONE, 50 SHORE, 2% 01L	GRAY	1.20-1.90	3.45	3.5	5.75	0.073	-	-	-	-	-	-	-	-
15366061	01	AJ	-	-	-	101	M34690J7	M39101J9	SILICONE, 50 SHORE, 2% 01L	DARK RED	2.09-2.66	3.45	3.5	5.75	0.063	-	-	-	-	-	-	-	-
15336674	02	AL	-	-	-	103	M34690J8	M39100J8	SILICONE, 50 SHORE, 2% 01L	BLUE	2.70-3.20	3.6 ±0.15	3.5	5.75 ±0.15	0.095	-	-	-	-	-	-	-	-
12191231	B11	-	-	RESTRICTED	15366064	101	M34710J9	M20W10J9	SILICONE, 50 SHORE, 4% 01L	PURPLE	1.80-2.40	3.45	3.5	5.75	0.067	12191157	B6	-	-	-	M32P5004	-	101
12191232	C9	-	-	RESTRICTED	15366051	101	M34710J1	M20W10J2	SILICONE, 50 SHORE, 4% 01L	GRAY	1.20-1.90	3.45	3.5	5.75	0.073	12191156	B6	-	-	-	M32P5004	-	101
12191208	B10	-	-	RESTRICTED	15366061	101	M34710J7	M20W10J9	SILICONE, 50 SHORE, 4% 01L	DARK RED	2.09-2.66	3.45	3.5	5.75	0.063	12191154	B6	-	-	-	M32P5004	-	101
CABLE SEAL	REV	N/P	STATUS	USAGE	REPLACED BY	TYPE	MAT'L SPEC	ALTERNATE MATERIAL SPEC	MATERIAL DESCRIPTION	COLOR	CABLE O.D. RANGE	ø C +0.1	E	ø G +0.1	VOL (CM³)	MYLAR & CABLE SEAL ASM	REV	N/P	STATUS	MYLAR STRIP	TYPE		
GT 280 (5.8 INTERNAL CAVITY DIAMETER)																							
3681295	01	-	-	RESTRICTED	-	101	M51200D5	-	FLUOROSILICONE, 40 SHORE	ORANGE	1.80-1.90	4.25	3.5	6.35	0.102	-	-	-	-	-	-	-	-
3681294	01	-	-	RESTRICTED	-	101	M51200D6	-	FLUOROSILICONE, 40 SHORE	BLUE	1.80-2.40	4.25	3.5	6.35	0.095	-	-	-	-	-	-	-	-
1365217	02	-	-	RESTRICTED	-	101	M4 J58005	-	FLUOROSILICONE, 40 SHORE	ORANGE	1.20-1.90	4.25	3.5	6.35	0.102	-	-	-	-	-	-	-	-
1364997	02	-	-	RESTRICTED	-	101	M4 J58006	-	FLUOROSILICONE, 40 SHORE	BLUE	1.80-2.40	4.25	3.5	6.35	0.095	-	-	-	-	-	-	-	-
15366067	01	AM	-	-	-	101	M34690J8	M39100J9	SILICONE, 50 SHORE, 2% 01L	TAN	2.50-3.20	4.25	3.5	6.35 +0.15/-0	0.085	-	-	-	-	-	-	-	-
15366066	01	AK	-	-	-	101	M34690K6	M39100K6	SILICONE, 50 SHORE, 2% 01L	YELLOW	1.80-2.40	4.25	3.5	6.35	0.095	-	-	-	-	-	-	-	-
15366065	01	AL	-	-	-	101	M34690K5	M39100K5	SILICONE, 50 SHORE, 2% 01L	ORANGE	1.20-1.90	4.25	3.5	6.35	0.102	-	-	-	-	-	-	-	-
12191225	03	AK	-	-	-	101	M34690J9	M39100J9	SILICONE, 50 SHORE, 2% 01L	PURPLE	1.40-1.90	4.25 +0.2/-0	3.5	6.35	0.063	12191224	B1	-	OBSOLETE	R0065G0Z	-	-	-
12191234	D6	-	-	RESTRICTED	15366067	101	M34710J8	M20W10J9	SILICONE, 50 SHORE, 4% 01L	TAN	2.50-3.20	4.25	3.5	6.35 +0.15/-0	0.085	12191223	D9	-	-	-	M32P5003	-	101
12191233	B10	-	-	RESTRICTED	15366066	101	M34710K6	M20W10K6	SILICONE, 50 SHORE, 4% 01L	YELLOW	1.80-2.40	4.25	3.5	6.35	0.095	12191222	B9	-	-	-	M32P5003	-	101
12191232	C9	-	-	RESTRICTED	15366065	101	M34710K5	M20W10K5	SILICONE, 50 SHORE, 4% 01L	ORANGE	1.20-1.90	4.25	3.5	6.35	0.102	12191221	B9	-	-	-	M32P5003	-	101
CABLE SEAL	REV	N/P	STATUS	USAGE	REPLACED BY	TYPE	MAT'L SPEC	ALTERNATE MATERIAL SPEC	MATERIAL DESCRIPTION	COLOR	CABLE O.D. RANGE	ø C +0.1	E	ø G +0.1	VOL (CM³)	MYLAR & CABLE SEAL ASM	REV	N/P	STATUS	MYLAR STRIP	TYPE		

REVISION HISTORY											
07E03	06	-	-	-	(12191152 THRU 12191157 & 12191223 THRU 12191225) - REVISED TOOL QUALIFICATION DRAWING			Z35238	JS	JS	CD
11APR01	07	-	-	-	(12191202,12191203,12191205)-CHANGED MYLAR STRIP MATERIAL-SEE TOP			Z39244	SS	SS	CD
19FEB04	08	-	-	-	(12191221-22 & 12191152-57 - UPDATED DRW TO REFLECT CURRENT CAD STANDARDS. SPECI ALL ACTIVE PARTS - REWORKED DWG.			Z51754	MDH	JAV	TM
09MR04	09	-	-	-	(12191221-23 - CORRECTED REVISION LEVELS ON DRAWINGS			Z52831	JMS	JMS	MP
30APR04	10	-	-	-	ADDED CUSTOMER SPECIFIC DRAWING			Z53027	MJM	MJM	LN
02JUL04	11	-	-	-	(12191220,12191222,12191223 - CORRECTED DWG.			Z56639	LJ	LJ	MP
23FEB05	12	-	-	-	ALL ACTIVE PARTS - ADDED RESTRICTED STATUS, TOLERANCE AND SPECIFICATIONS. SEE NOTE 3 TO CABLE DWG. SIZE AND DIM 'C'			Z62582	RH	RH	MP
24AUG05	13	-	-	-	ALL PARTS - REVISED CHART; (12191227 - ADDED NEW PART NUMBER TO CHART. ADDED MYLAR/SEAL ASSEMBLY DETAIL.			Z72772	PGP	PGP	MP
19NOV06	14	-	-	-	ALL ACTIVE PARTS - REWORKED DWG A4.E #6 FROM ZMS AND SIA AT TTT1 FROM CHART			Z88824	AB	WG	MP
08JAN07	15	-	-	-	ADDED (12191229,-1)&(2537 AND RELEASED. ALL ACTIVE PARTS - REVISED CHART			431495	PGP	PGP	TAV
23DEC07	16	-	-	-	(12191216,-1)&(3681295,1537&3681294,1536&3681295,1537&3681294,1536&1365217 & 1364997)&(1536&1537 & 2537&3681 - ADDED NEW PART NUMBERS TO CHART. (12191224 & 2537&3681 - OBSOLETE			432629	JSC	JAV	MP
06DEC07	17	-	-	-	(3681294 & 1365217 - RELEASED)&(1364997 - RESTRICTED. CABLE O.D. #4. CABLE SIZE #6. ALL PARTS - REVISED CHART. (3681295 - RESTRICTED. STC #48 &#6 AND Ø3 #45 %.M			433110	JSC	JAV	TAV

NOTES

1. UNLESS OTHERWISE SPECIFIED AND/OR INDICATED:
   DIMENSIONS ARE TO FACE OF VIEW SHOWN AND AUTOMATICALLY ROUNDED BY COMPUTER FOR INSPECTION (SEE MATH MODEL FOR PRECISE DIMENSIONS). FOR ALL OTHER DIMENSIONS NOT SHOWN BUT REQUIRED, USE DUALS SEE MATH MODEL FOR PRECISE TOOL PATH DATA.
2. PARTS SHOULD BE MADE FROM VIRGIN MATERIAL ONLY.
3. CABLE SEALS MADE FROM LOWER OIL MATERIAL (1-2%)ARE RECOMMENDED FOR THE LOOSE PIECE SEAL APPLICATION PROCESS.
4. CABLE SEALS MADE FROM HIGHER OIL MATERIAL (4%)ARE RECOMMENDED FOR THE MYLAR/CABLE SEAL ASSEMBLY PROCESS.
5. THIS PRODUCT IS NOT CATEGORIZED AS AN APPEARANCE ITEM. MINOR IMPERFECTIONS INCLUDING, BUT NOT LIMITED TO, FLOW MARKS, COLOR BLEMISHES, GATE VESTIGE, AND SOFT FLASH THAT DO NOT AFFECT THE FIT, FORM, OR FUNCTION OF THE PART ARE PERMISSIBLE PER NAP 4.10-18.

SCALE 1011

SHEETMTL	PART DRAWING
STYLE	
SCALE 1011	SIZE DWG
SEE CHART	

UNLESS OTHERWISE SPECIFIED
THIS DRAWING IS IN ACCORDANCE WITH ANSI Y14.5M-1994 UNLESS OTHERWISE SPECIFIED.
DIMENSIONS ARE IN MILLIMETERS. ALL DIMENSIONS APPLY AFTER PLATING. ALL DIMENSIONS APPLY BEFORE PAINTING. ALL DIMENSIONS APPLY BEFORE PLATING. DIMENSIONS ARE TO INSPECTION AT VISUAL TOLERANCE. DIMENSIONS ARE TO FACE OF VIEW. DIMENSIONS ARE TO BE DISPLAYED.
DIMENSIONS ARE IN MILLIMETERS

REFERENCE

SUBCONTRACT OF CRITICAL OR RESTRICTED CHARACTER PART SERIAL (SERIALS)

SEE CHART

SERIALIZE

SUBCONTRACT

SERIALIZE TEXT

TAXI SEAL CBL 1X GT

THIRD ANGLE PROJECTION

DO NOT SCALE DRAWING

UNLESS OTHERWISE SPECIFIED DIMENSIONS ARE IN MILLIMETERS
DIMENSIONS APPLY AFTER PLATING
DIMENSIONS APPLY BEFORE PAINTING
DIMENSIONS APPLY BEFORE PLATING
DIMENSIONS ARE TO INSPECTION AT VISUAL TOLERANCE
DIMENSIONS ARE TO FACE OF VIEW
DIMENSIONS ARE DISPLAYED
DIMENSIONS ARE IN MILLIMETERS

DELPHI
DELPHI PACKARD ELECTRICAL/ELECTRONIC ARCHITECTURE
WARREN, OH

		DATE
DR		
CH		
APPV1 Ex. MONITORS		150CT94
APPV2 Ex. SERVICE/TRAINING		150CT94
APPV3 Sr. Ex. MGR		03MAY95
APPV4		

SUBMITTED BY DELPHI PER ANSI/ASQC Z1.4 SAMPLING PLAN

SEAL

DELPHI

DRAWING NUMBER
12191225
SIZE A1x4 | SHEET 2 OF 2 | REV 19 | R | 17 -

DRAWING NUMBER
12191225
SIZE A1x4 | SHEET 2 OF 2 | REV 19 | R | 17 -

ISI SIZE