SYMBOL DEFINITION		
A DIMENSION WITHOUT AN INSPECTION REPORT SYMBOL ( ) DOES NOT REQUIRE INSPECTION. IT MAY BE CONTROLLED ON THE INDIVIDUAL COMPONENT DRAWING.	TOTAL NO OF INSPECTIONS REQUIRED	11
	LAST NO. USED	11

MISSING SYMBOLS
NO MISSING SYMBOL NUMBER

DWG STATUS					ZONE	REVISION HISTORY	AUTH	DR	APVD 1	APVD 2
DATE	STG	REV	N/P	CHG						
24FE99	R	01	-	-		ALL PARTS - REDRAWN TO PD; OBSOLETE PARTS REMAIN OBSOLETE	980007	HGH	GMC	OG
24FE99	R	02	-	-		ALL PARTS - ADDED NOTE; OBSOLETE PARTS REMAIN OBSOLETE	191577	HGH	GMC	OG
24FE99	R	03	-	-		ALL PARTS - UPDATED PDM ATTRIBUTES	191599	GMC	GMC	OG
20AU99	R	04	-	-		12015199 - UPDATED PDM ATTRIBUTES	191265	EVV	FKV	JM
18DE01	R	05	-	-		ALL ACTIVE PARTS - ADDED NOTES (2 PLCS), REVISED MAT'L SPEC & LOGO	215879	EGR	EAR	RC
16MY03	R	06	-	-		ALL ACTIVE PARTS - ADDED NOTE	241169	RH	RH	RC
10AU04	R	07	-	-		UPDATED 280 METRI-PACK CAVITY	257885	MJM	MJM	MR
04AP05	R	08	-	-		ALL ACTIVE PARTS - 23 ±0.3 WAS 23, 16.3 +0.2/-0.15 WAS 16.3	265326	RH	RH	MR
02MR06	R	09	-	-		12015199 - MAT'L SPEC WAS M3592002	278049	GLG	JVM	GGI

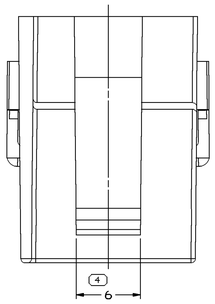

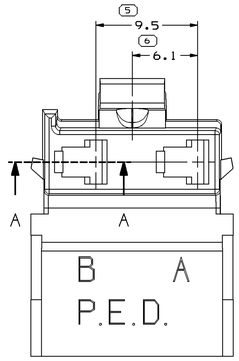

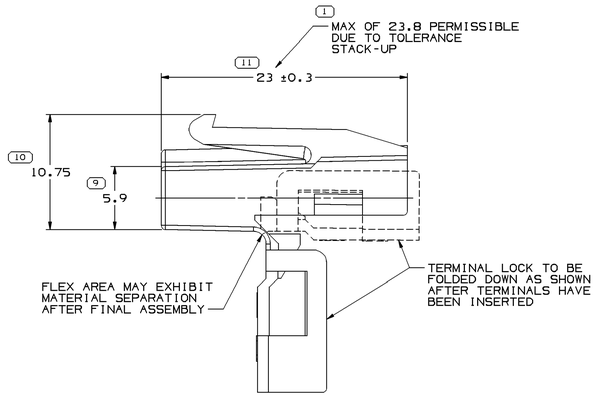

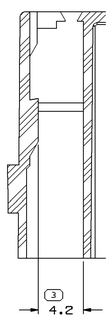

SECTION A - A

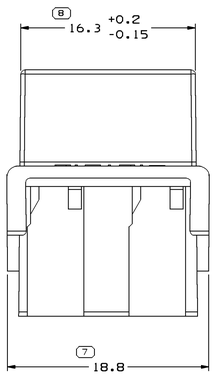

2
DIMENSION CAN VARY UP TO 19.2 AFTER COMPONENT IS CLOSED AT FINAL ASSEMBLY

NOTES

1. UNLESS OTHERWISE SPECIFIED AND/OR INDICATED:

   DIMENSIONS ARE TO FACE OF VIEW SHOWN AND AUTOMATICALLY ROUNDED BY COMPUTER FOR INSPECTION (SEE MATH MODEL FOR PRECISE DIMENSIONS). FOR ALL OTHER DIMENSIONS NOT SHOWN BUT REQUIRED FOR TOOL BUILD, SEE MATH MODEL FOR PRECISE TOOL PATH DATA.

2. REFERENCE MATING COMPONENTS OR EQUIVALENT:
   CONNECTOR 12015271

3. THIS PART ACCEPTS THE FOLLOWING COMPONENTS OR EQUIVALENT:
   TERMINAL 12033821

4. CONNECTOR NOT TO STANDARDS. CONNECTOR LIMITED TO 3 MM^2 PVC CABLE OR SMALLER.

5. MATING INFORMATION SEE:
   MATING CONFIG DWG 15369312 (FOR PART 12015199 ONLY)

6. MATERIAL RECYCLING CODE PER ISO 11469. (2.3)X(0.1) CHARACTERS AS SHOWN TO BE LOCATED ON ANY EXTERIOR SURFACE.

7. (2.3)X(0.1) DELPHI CORPORATE BRAND TO BE LOCATED ON ANY EXTERIOR SURFACE, PREFERABLY VISIBLE AT FINAL ASSEMBLY. OPTIONAL CONSTRUCTION FOR EXISTING TOOLING MAY BE "PED".

PART NO	REV	N/P	STATUS	MATERIAL SPECIFICATION AND COLOR	VOL CM^3
12048273	H3	-	OBSOLETE	M3596003 PA6-GRA MD	1.720
12034343	10	AB		M3592001 - PA66 IM HS BLK	1.679
12034009	10	AB		M3592012 - PA66 IM HS GRA LT	1.679
12015199	11	-		M3592024 - PA66 HS IM CRM	1.679

11 PROCESS SENSITIVE DIMENSION

DIMENSIONS ENCLOSED IN ( ) INDICATE REFERENCE DIMENSIONS AND NO TOLERANCE LIMITS ARE ESTABLISHED

DIMENSIONAL RANGE (MM)																							
FROM	> 0	> 20	> 30	> 70	>100	>150	>200	>250	>300	CHART EX													
TO	20	30	70	100	150	200	250	300	400														
TOLERANCE UNLESS OTHERWISE SPECIFIED																							
	±0.15	±0.2	±0.3	±0.4	±0.5	±0.6	±0.8	±1	±1.2														
ANGULAR TOLERANCE ±2°																							

DWG TYPE: PART DRAWING

STYLE

VOLUME (CM^3): SEE CHART

DISTR CODE: D

UNLESS OTHERWISE SPECIFIED

THIS DOCUMENT IS IN ACCORDANCE WITH ASME Y14.5M-1994 AS AMENDED BY THE IM GLOBAL DIMENSIONING AND TOLERANCING ADDENDUM - 1997. ALL GEOMETRIC TOLERANCES AND RELATED DATUMS APPLY RFS. RULE #1(PERFECT FORM AT MMC) DOES NOT APPLY WHEN RELATIONSHIP BETWEEN FEATURES IS ESTABLISHED BY ORIENTATION OR LOCATION TOLERANCES. SEPARATE POSITION CALLOUTS MAY BE BASED SEPARATELY, REGARDLESS OF DATUM REFERENCE.

ALL DIMENSIONS ARE IN MILLIMETERS

REFERENCE

THIRD ANGLE PROJECTION

DO NOT SCALE

USE MATH DATA

UNIGRAPHICS

DELPHI

DELPHI PACKARD ELECTRIC SYSTEMS
WARREN, OH

		DATE
DR		
APVD1	H. GAMA	16DE98
APVD2	G. MACIAS	16DE98
APVD3	O. GALLEGOS	18DE98
APVD4		
APVD5		

SUBSTANCES OF CONCERN AND RECYCLED CONTENT PER DELPHI (094900)

MATERIAL: SEE CHART

DRAWING NAME: TAXI CONN F M/P 280

DRAWING NUMBER: 12034008

SIZE	SCALE	FRAME NO	SHEET NO	STG	REV	N/P
A0	5:1	1 OF 1	1 OF 1	R	09	-

User: 12317
Mapping: CAD-CUS01-S01
Mapscript:
Date: 09-Mar-06 Time: 12:47