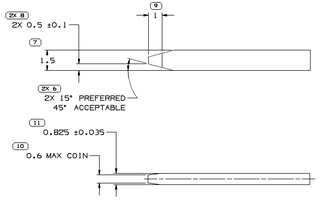

MATERIAL SPECIFICATIONS

RECOMMENDED
BASE METAL - CDA-210, OILDING, EXTRA SPRING TEMPER
PLATING - 0.0050 ±0.0025 MM THK TIN

MINIMUMS
ELECTRICAL CONDUCTIVITY - ≥ 20% IACS @20°C. USE OF A MATERIAL WITH CONDUCTIVITY < 20% IACS MUST BE APPROVED BY PACKARD ELECTRIC MATERIALS ENGINEERING.

TENSILE STRENGTH - 407 MPa

PLATING - FOR LOW ENERGY I≤ 5 V) AND NON-PASSENGER COMPARTMENT POWER CIRCUITS, 0.0050 ±0.0025 MM THICK TIN. FOR MATERIALS CONTAINING 10% OR MORE ZINC, AN UNDERPLATE OF COPPER 0.0050 ±0.0025 MM THICK IS REQUIRED.

BLADE THICKNESS
UNPLATED = 0.813 ±0.025
TIN PLATED = 0.823 ±0.030

MATING BLADE INFORMATION
SCALE 10:1

INSPECTION SYMBOLS SHOWN IN THESE VIEWS ARE FOR REFERENCE ONLY

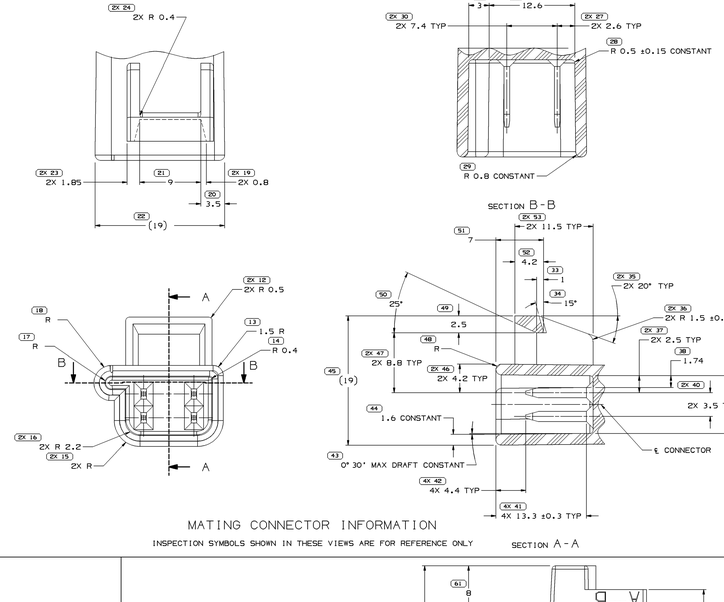

MATING CONNECTOR INFORMATION

INSPECTION SYMBOLS SHOWN IN THESE VIEWS ARE FOR REFERENCE ONLY

NOTES

1. UNLESS OTHERWISE SPECIFIED AND/OR INDICATED:
   DIMENSIONS ARE TO FACE OF VIEW SHOWN AND AUTOMATICALLY ROUNDED BY COMPUTER FOR INSPECTION (SEE MATH MODEL FOR PRECISE DIMENSIONS). FOR ALL OTHER DIMENSIONS NOT SHOWN BUT REQUIRED FOR TOOL BUILD, SEE MATH MODEL FOR PRECISE TOOL PATH DATA.
   ALL RADII 0.5
   DRAFT IS 0°30' MAX ON ALL OUTSIDE SURFACES
2. MATING COMPONENTS OR EQUIVALENT:
   CONNECTOR 12064760
3. TERMINALS MUST WITHSTAND A MINIMUM PUSHOUT FORCE OF 89N (20 LBS).
4. RECOMMENDED BODY MATERIAL:
   POLYESTER OR EQUIVALENT THERMOPLASTIC.

SYMBOL DEFINITION		MISSING SYMBOLS
A DIMENSION WITHOUT AN INSPECTION REPORT SYMBOL DOES NOT REQUIRE INSPECTION. IT MAY BE CONTROLLED ON THE INDIVIDUAL COMPONENT DRAWING.	TOTAL NO OF INSPECTIONS REQUIRED: 94	NO MISSING SYMBOL NUMBER
	LAST NO. USED: 67	

DWG STATUS DATE	STS	RE	N/P	DHB	ZONE	REVISION HISTORY	AUTH	DR	APVD 1	APVD 2
04SE02	R	01	-	-		TAXI DWG CREATED FROM SEPARATE DRAWINGS. ALL PARTS - SECONDARY TERMINAL LOCK NOTE WAS 12047664 & ADDED NOTES 12 PLCS)	23X019	RP	RP	MC
16MR04	R	02	-	-		REVISED MODEL TO MATCH PART1 REVISED ORIENTATION OF CAVITIES C & D	253260	RH	RH	BG
21JL05	R	03	-	-		12064760 - CREATED NISSAN CUSTOMER PART DRAWING	26S749	JTV	TKV	TAV
22DE06	R	04	-	-		12146407 - OBSOLETE	29B186	JBC	JAA	DG1

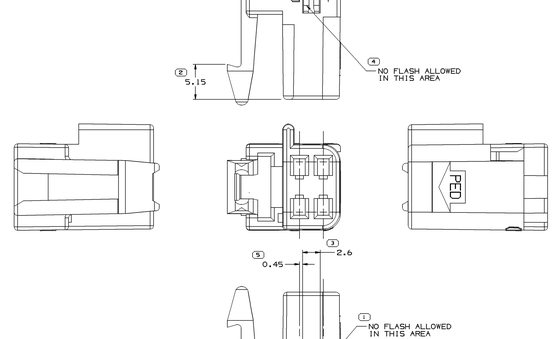

OPTIONAL CONSTRUCTION

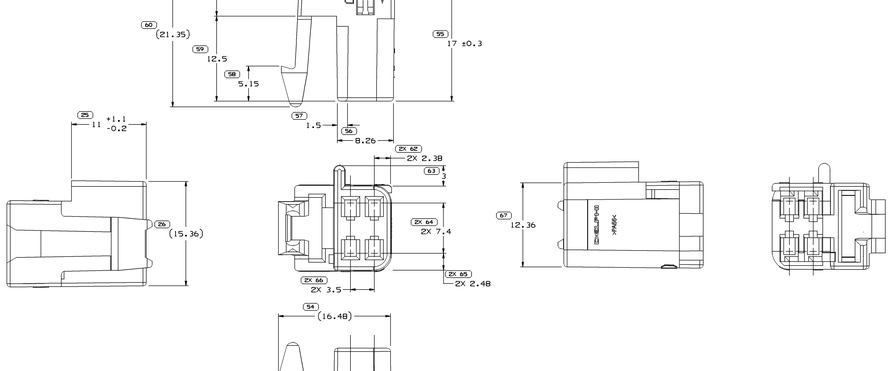

NOTES

1. UNLESS OTHERWISE SPECIFIED AND/OR INDICATED:
   DIMENSIONS ARE TO FACE OF VIEW SHOWN AND AUTOMATICALLY ROUNDED BY COMPUTER FOR INSPECTION (SEE MATH MODEL FOR PRECISE DIMENSIONS). FOR ALL OTHER DIMENSIONS NOT SHOWN BUT REQUIRED FOR TOOL BUILD, SEE MATH MODEL FOR PRECISE TOOL PATH DATA.
2. MATERIAL RECYCLING CODE >PA66< PER SAE J1344. (2.31X(0.1) RAISED CHARACTERS AS SHOWN TO BE LOCATED ON ANY EXTERIOR SURFACE. OPTIONAL CONSTRUCTION TO BE NO MATERIAL RECYCLING CODE.
3. MATING COMPONENTS OR EQUIVALENT:
   CONNECTOR 12064761
4. THIS PART ACCEPTS THE FOLLOWING COMPONENTS OR EQUIVALENT:
   CAVITIES TO ACCEPT TERMINAL 12047883 OR EQUIVALENT.
   MAX INSULATION CRIMP MUST BE LESS THAN 2.65 HIGH AND 2.7 WIDE.
   SECONDARY TERMINAL LOCK 15304070
   CONNECTOR POSITION ASSURANCE LOCK 12052834
5. (2.31X(0.1) RAISED DELPHI CORPORATE BRAND TO BE LOCATED ON ANY EXTERIOR SURFACE, PREFERABLY VISIBLE AT FINAL ASSEMBLY. OPTIONAL CONSTRUCTION TO BE "PED" OR NO LOGO.
6. THIS CONNECTOR WILL PASS THROUGH A Ø20 MIN HOLE.

12146407	A6	-	OBSOLETE	M3592002 PA66 HS IM NAT	1.564	
12064760	E6	-	-	M3592001 PA66 HS IM BLK	1.564	
PART NO	REV	N/P	STATUS	MATERIAL SPECIFICATION AND COLOR	VOLUME CM³	

DRAWING NUMBER 12146408
SIZE A1x3 | SCALE 5:1 | SHEET 2 OF 2 | 1 OF 1 | REV 1 OF 1 | REV 04 | N/P -

DWG TYPE: PART DRAWING
STYLE
VOLUME CM³: 1.564
SYSTEM USE: D

UNLESS OTHERWISE SPECIFIED
THIS DOCUMENT IS TO INTERPRETED WITH ASME Y14.5M-1994 AS INTERPRETED BY DELPHI GLOBAL STANDARDS.
THIS DOCUMENT IS THE PROPERTY OF DELPHI PACKARD ELECTRIC SYSTEMS AND MUST NOT BE DISCLOSED TO THIRD PARTIES WITHOUT WRITTEN PERMISSION. THE INFORMATION CONTAINED IN THIS DOCUMENT IS TO BE USED ONLY IN CONNECTION WITH THE BUSINESS OF DELPHI PACKARD ELECTRIC SYSTEMS.
DEVIATION OF OTHER REFERENCE: NO RANGE REPORTED.
ALL DIMENSIONS ARE IN MILLIMETERS

(*) PROCESS SENSITIVE DIMENSION
DIMENSION ENCLOSED IN () INDICATE REFERENCE DIMENSION, NO GO TOLERANCE LIMITS ARE ESTABLISHED

DIMENSIONAL RANGE (MM)												
FROM	0	3	6	30	120	250	500	1000	2000	4000
TO	3	6	30	120	250	500	1000	2000	4000	8000
TOLERANCE UNLESS OTHERWISE SPECIFIED										
±0.15	±0.2	±0.3	±0.4	±0.5	±0.7	±1.0	±1.5	±2.0	±3.0	±4.0

ANGULAR TOLERANCE ±1°

REFERENCE

THIRD ANGLE PROJECTION

DO NOT SCALE
SEE MATH DATA

DELPHI
DELPHI PACKARD ELECTRIC SYSTEMS
WARREN, OH

		DATE
DR		
APVD1	R. VILLANUEVA	010002
APVD2	R. VILLANUEVA	010002
APVD3	G. MACIAS	030002
APVD4		
APVD5		

SUBSTANCES OF CONCERN: NO RECYCLED CONTENT PER DELPHI (PVHP02)

SCALE: SEE CHART

DRAWING NAME: TAXI CONN F M/P 150

DRAWING NUMBER: 12146408
SIZE A1x3 | SCALE 5:1 | SHEET 2 OF 2 | 1 OF 1 | REV 1 OF 1 | REV 04 | N/P -

Delphi Packard Electric Systems

Date: 03-Jan-07 Time: 09:51 Page 1 of 1

1S1 804 08