CONTACT PLATING : gold 0.40 µ over nickel 1 µ .

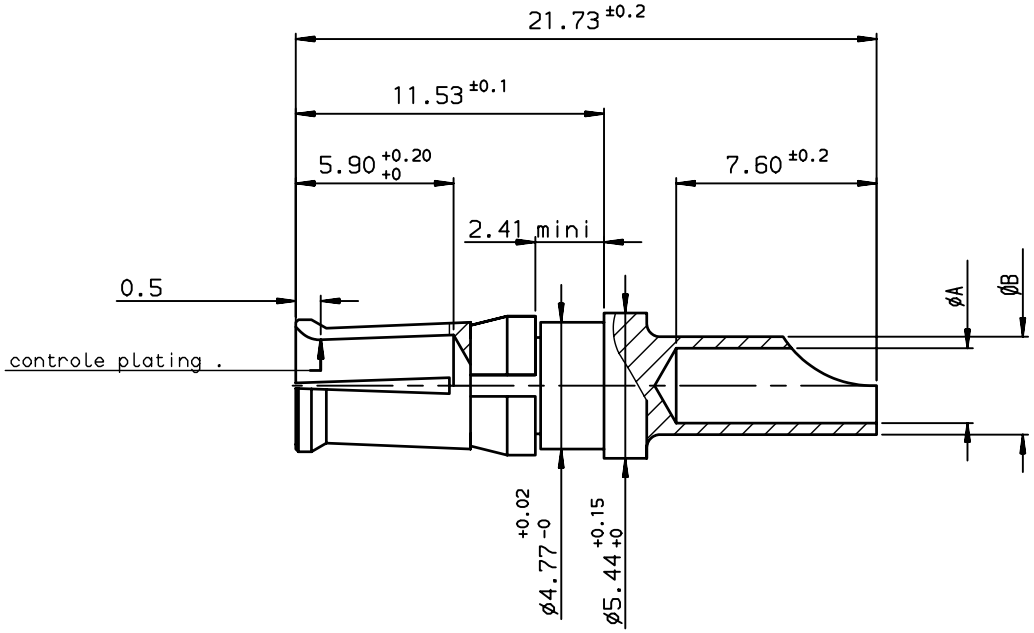

8630-3099NLF	Power contact (AWG 8)	4.40	5.00	3.90	8.98
8630-3057NLF	Power contact (AWG 12)	2.80	3.65	2.40	3.18
8630-3061NLF	Power contact (AWG 14)	2.10	3.00	1.70	1.91
8630-3065NLF	Power contact (AWG 16)	1.70	2.60	1.50	1.34
PART NUMBER	Designation	ØA +0.10 0	ØB ±0.10	Ø ame mm	Section mm²
				WIRE	

NOTE:RoHS INFORMATIONS

- The "LF" product meets European union Directives and other country regulations as described in GS-22-008.
- The product is not intented to be exposed to a manufacturing solder process.
- Packaging spec: see GS-14-920.

rev	ecn no	dr	date
A	LS06-0022	MPE	2006/06/11
B	LS06-0095	LGO	2006/06/23
-	-	-	-
-	-	-	-
-	-	-	-
-	-	-	-
-	-	-	-

European Views

www.fciconnect.com			surface ISO 1302		tolerance std ISO 406 ISO 1101	projection	mm
			TOLERANCES UNLESS OTHERWISE SPECIFIED				
Dr	M.PESSON	2006/06/11	ANGULAR	LINEAR	0.X ±0.1	size A3	Scale 5
Eng	M.PESSON	2006/06/11			0.XX ±0.1		
Chr	LEGARRE	2006/06/11	0.XX° ±2°		0.XXX ±0.1	ECN	LS06-0095
Appr	LEGARRE	2006/06/11	Product family		D-SUB	Spec ref	-

title: POWER CONTACT (taille 8)
removable contact .

dwg no: C01-8639-2159 Rev. B

catalog no -

CUSTOMER sheet 1 of 1

Copyright FCI.