STAINLESS STEEL

CONNECTOR DESIGNATOR

A

ROTATABLE COUPLING

620 A A 002 U 16 D

- Product Series
- Connector Designator
- Angular Function
  A = 90°
- Basic Part No.
- Finish
  Z1 = Passivate
  U = Black Cadmium
- Shell Size
- Drain Hole Option
  (Omit for None)

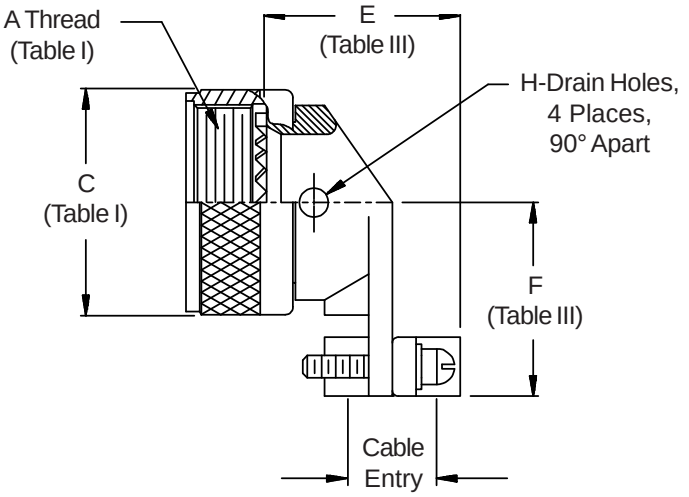

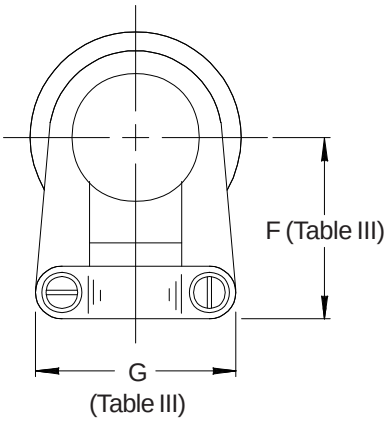

See inside back cover fold-out or page 14 for Table I.

TABLE III: CABLE ENTRY

Shell Size	E Max		F Max		G Max		H Max		Cable Entry Closed		Cable Entry Open	
08	.704	(17.9)	.808	(20.5)	.752	(19.1)	.125	(3.2)	.125	(3.2)	.204	(5.2)
10	.786	(20.0)	.867	(22.0)	.832	(21.1)	.125	(3.2)	.187	(4.7)	.286	(7.3)
12	.979	(24.9)	.929	(23.6)	.988	(25.1)	.188	(4.8)	.291	(7.4)	.416	(10.6)
14	1.039	(26.4)	.992	(25.2)	1.046	(26.6)	.188	(4.8)	.351	(8.9)	.476	(12.1)
16	1.188	(30.2)	1.056	(26.8)	1.319	(33.5)	.188	(4.8)	.501	(12.7)	.626	(15.9)
18	1.300	(33.0)	1.233	(31.3)	1.451	(36.9)	.188	(4.8)	.518	(13.2)	.706	(17.9)
20	1.425	(36.2)	1.296	(32.9)	1.551	(39.4)	.188	(4.8)	.581	(14.8)	.831	(21.1)
22	1.550	(39.4)	1.358	(34.5)	1.653	(42.0)	.188	(4.8)	.644	(16.4)	.956	(24.3)
24	1.675	(42.5)	1.420	(36.1)	1.775	(45.1)	.188	(4.8)	.706	(17.9)	1.081	(27.5)
28	1.813	(46.1)	1.634	(41.5)	2.020	(51.3)	.188	(4.8)	.750	(19.1)	1.187	(30.1)

1. Cable Entry is defined as the accommodation entry for the wire bundle or cable. Dimensions are not intended for inspection criteria.
2. Metric dimensions (mm) are indicated in parentheses.

© 2005 Glenair, Inc. CAGE Code 06324 Printed in U.S.A.