340-002
O-Ring Sealed Shorting Cap Backshell
Direct Coupling

CONNECTOR DESIGNATORS

A-B*-C-D-E-F
G-H-J-K-L-S

*** Conn. Desig. B See Note 3**

DIRECT COUPLING

340 F S 002 M 16-5 H 6 A

- Product Series
- Connector Designator
- Angle and Profile S = Straight
- Basic Part No.
- Finish (Table II)
- Shell Size (Table I)
- Length (1/2 inch increments: e.g. 5 = 2.5 inches, 1.0 Inch Minimum Order Length)
- Attachment Symbol (Table III)
- Attachment Length (1/2 inch increments: e.g. 6 = 3 inches)
- End Fitting Symbol (Table IV)

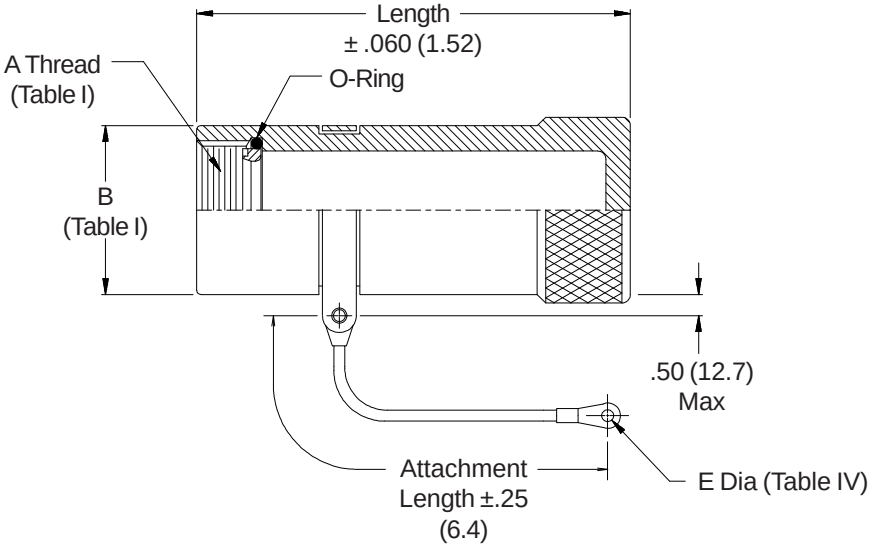

See inside back cover fold-out or pages 13 and 14 for unabrdiged Tables I and II.

TABLE IV: END FITTING

Symbol	E Dia.	
A	.140	(3.6)
B	.167	(4.2)
C	.182	(4.6)
D	.191	(4.9)
E	.125	(3.2)
F	.218	(5.5)

TABLE III: ATTACHMENT OPTIONS

Symbol	Attachment
C	No attachment, body strap only
D	Bead chain, cres, passivate, with terminal
E	Link chain, cres, passivate, with reverse link
F	Wire rope, nylon jacket, with terminal
G	Nylon rope, with terminal
H	Wire rope, teflon jacket, with terminal
N	Attachment omitted
R	Wire rope, PVC jacket, with terminal
S	#8 Sash chain, cres, passivate
U	Wire rope, polyurethane jacket, with terminal

TABLE II: STANDARD FINISHES

GLENAIR SYMBOL	FINISH
B	Cadmium Plate, Olive Drab
C	Anodize, Black
G	Hard Coat, Anodic
M	Electroless Nickel
NF	Cadmium Plate, Olive Drab Over Electroless Nickel

See Back Cover for Complete Finish Information and Additional Finish Options

1. Metric dimensions (mm) are indicated in parentheses.
2. Custom engraving available, consult factory.
3. When using Connector Designator B refer to pages 18 and 19 for part number development.

© 2005 Glenair, Inc. CAGE Code 06324 Printed in U.S.A.