MICRO SWITCH
a Honeywell Division
FED. MFG. CODE 91929

MINIATURE PRECISION LIMIT SWITCH

CATALOG LISTING
924CE16-Y3

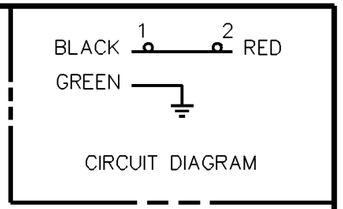

CIRCUIT DIAGRAM

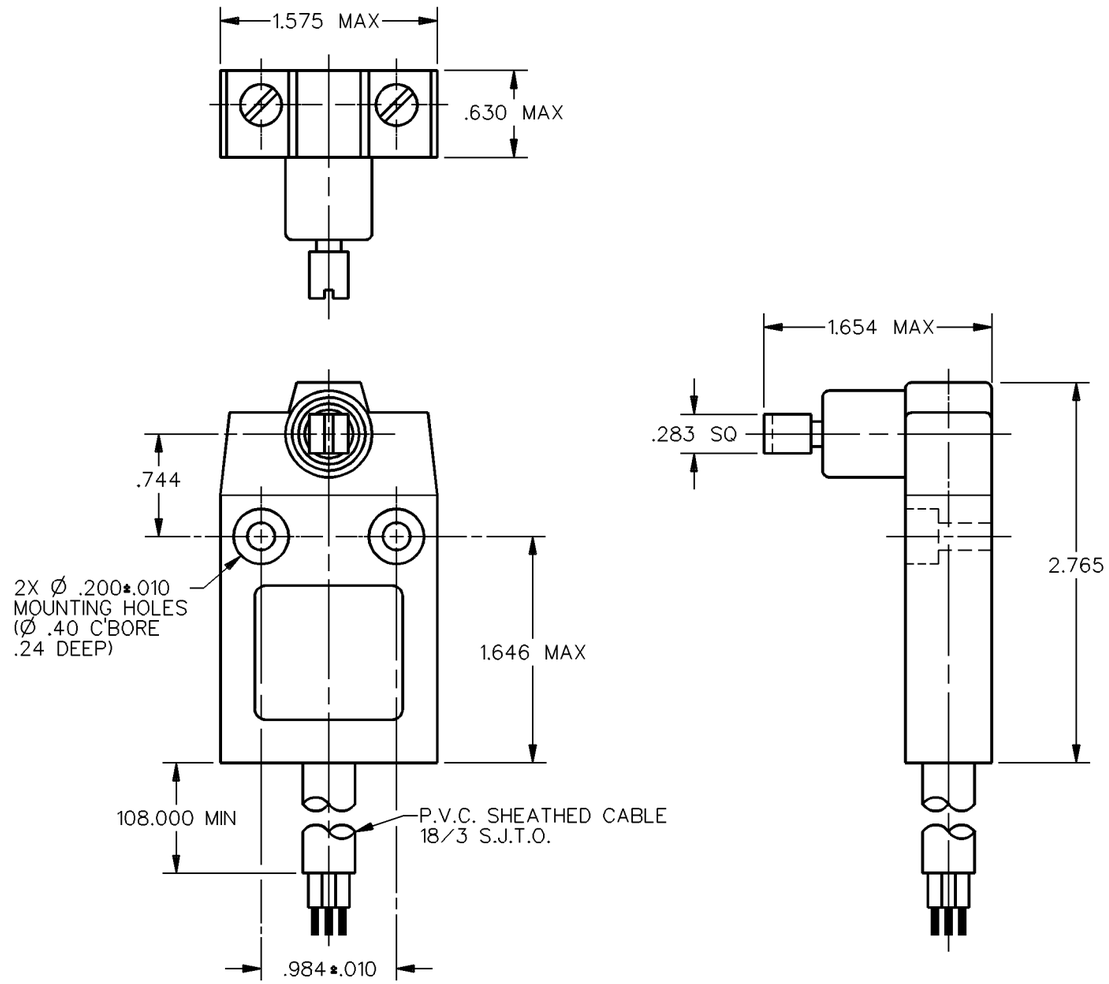

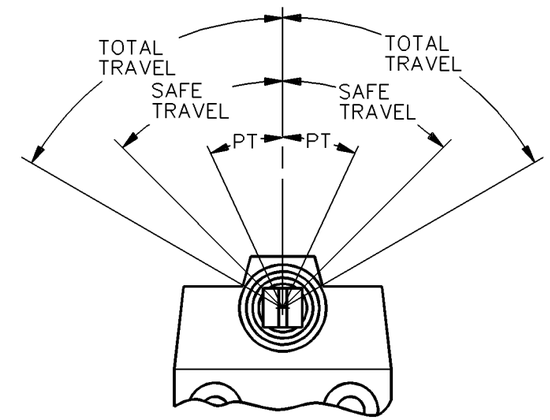

NOTES
1 – ZINC HOUSING FINISHED WITH GRAY PAINT
2 – SWITCH WILL ACTUATE IN BOTH DIRECTIONS

THIS DRAWING COVERS A PROPRIETARY ITEM AND IS THE PROPERTY OF MICRO SWITCH. A DIVISION OF HONEYWELL. THIS DRAWING IS NOT TO BE COPIED OR USED WITHOUT THE APPROVAL OF MICRO SWITCH

THIRD ANGLE PROJECTION

SCALE FULL

DO NOT SCALE PRINT

CHARACTERISTICS

OPERATING FORCE	2.62 IN. LB MAX
PRETRAVEL	26° MAX
TOTAL TRAVEL	65° MAX
SAFE TRAVEL	50° MIN

ELECTRICAL DATA

CONTACT ARRANGEMENT
S P S T D B

10A 250 VAC
1/3 HP 125 OR 250 VAC

UNLESS OTHERWISE SPECIFIED TOLERANCES ARE

ONE PLACE	(.0)	±.030
TWO PLACE	(.00)	±.015
THREE PLACE	(.000)	±.005
ANGLES		±

WEIGHT

ANSI Y14.5M–1982 APPLIES

924CE16-Y3

DRAWING NUMBER M

ISSUE 2

RELEASE NO. PR-14729 REPLACES

REVISIONS
A CO-69061 S A V 4 NOV 91

CHECK

CHECK

CHECK

CHECK

DRAWN SAV 4 NOV 91

DDM/CAD