MICRO SWITCH
a Honeywell Division
FED.MFG.CODE 91929

PACKET

CATALOG LISTING
15PA292-HE

THIS DRAWING COVERS A PROPRIETARY ITEM AND IS THE PROPERTY OF MICRO SWITCH, A DIVISION OF HONEYWELL. THIS DRAWING IS NOT TO BE COPIED OR USED WITHOUT THE APPROVAL OF MICRO SWITCH.

CATALOG LISTING 15PA292-HE
PAGE 1 OF 1
RELEASE NO. PR-21824
REPLACES
ISSUE 1
CHECK
REVISIONS
CHECK
CHECK
CHECK
DRAWN M A M 12OCT95
DDM/CAD

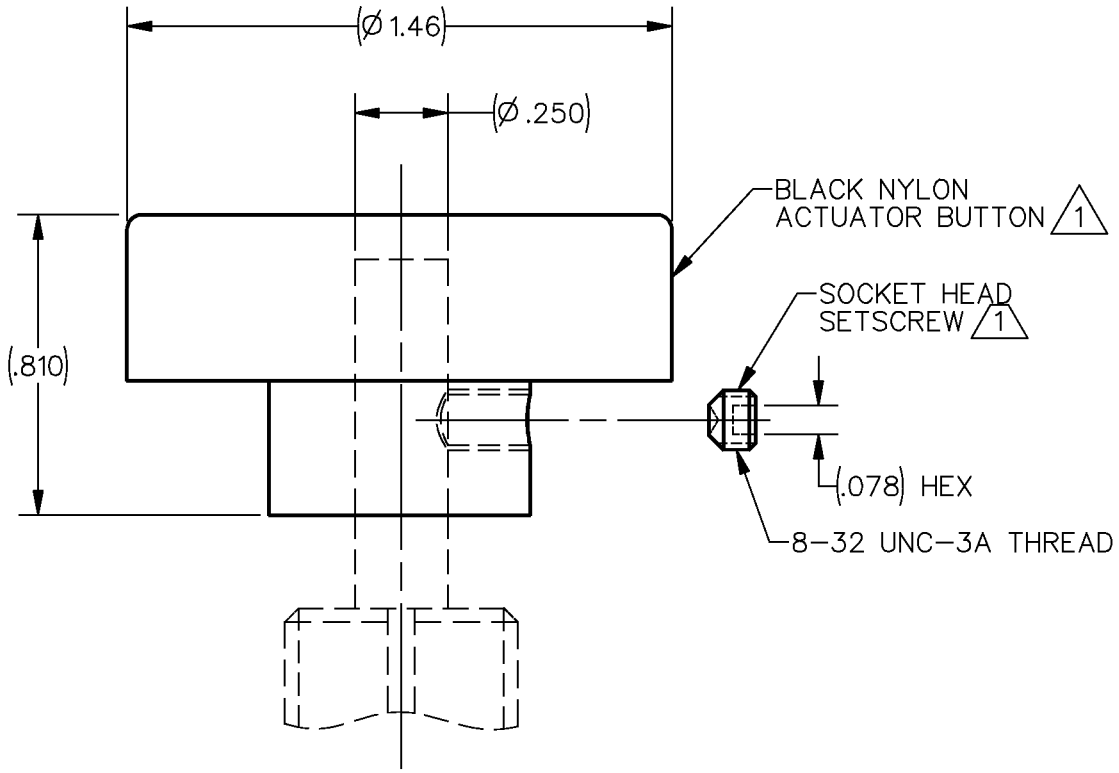

NOTE
1 – PARTS FURNISHED UNASSEMBLED AS A PACKET

THIRD ANGLE PROJECTION

SCALE 2:1

DO NOT SCALE PRINT

UNLESS OTHERWISE SPECIFIED TOLERANCES ARE

ONE PLACE	(.0)	±.030
TWO PLACE	(.00)	±.015
THREE PLACE	(.000)	±.005
ANGLES		±

WEIGHT

ANSI Y14.5M-1982 APPLIES