MICRO SWITCH
FREEPORT, ILLINOIS, U.S.A.
A DIVISION OF HONEYWELL
FED. MFG. CODE 91929

ASSEMBLY - PUSHBUTTON SWITCH

CATALOG LISTING
2PB11

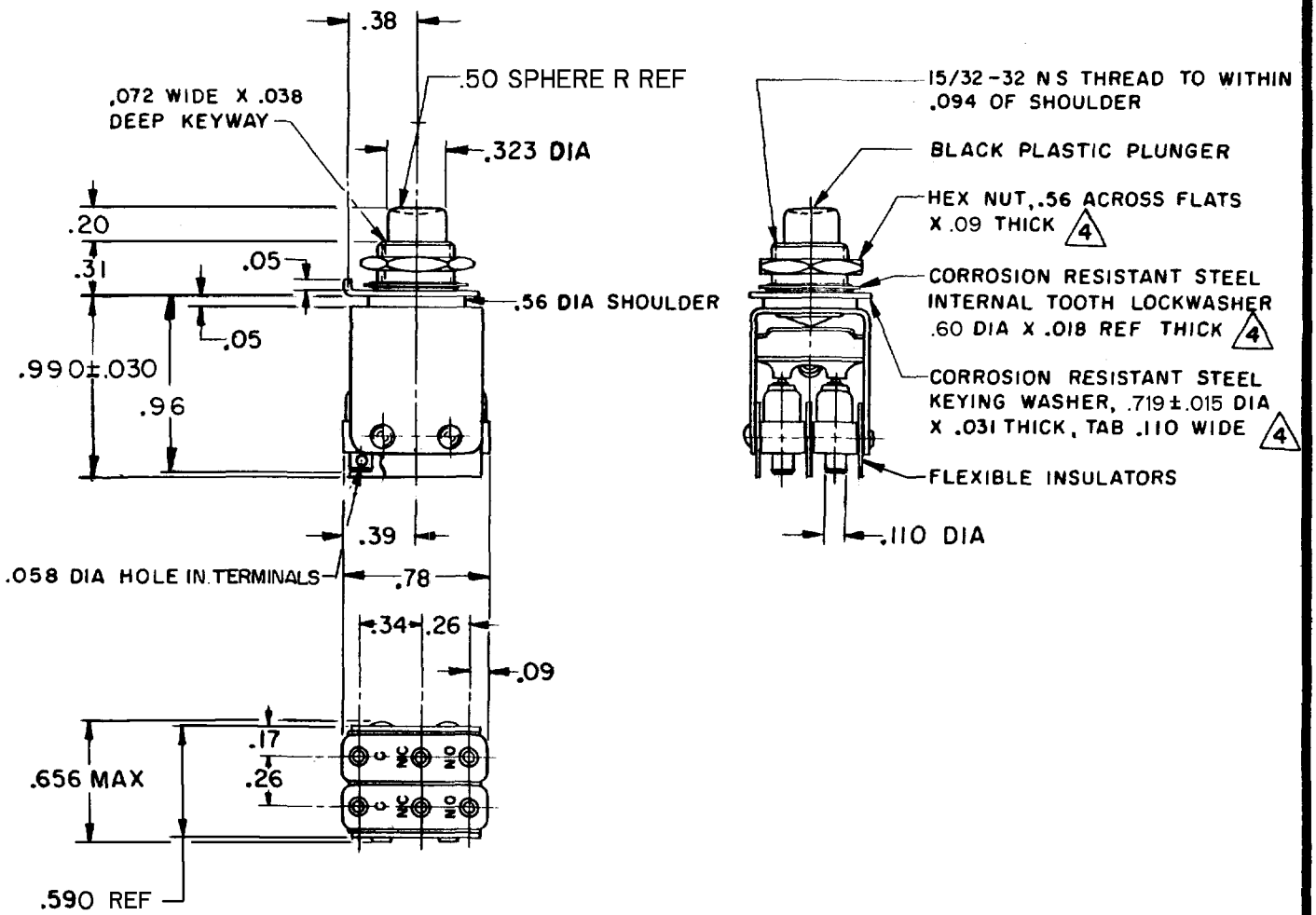

NOTES
1 - UNIT INCLUDES "11SM" TYPE BASIC SWITCH (2)
2 - TERMINALS ARE PLATED FOR SOLDERING
3 - SWITCHES DO NOT NECESSARILY OPERATE SIMULTANEOUSLY
4 MOUNTING HARDWARE FURNISHED UNASSEMBLED

THIS DRAWING COVERS A PROPRIETARY ITEM AND IS THE PROPERTY OF MICRO SWITCH, A DIVISION OF HONEYWELL. THIS DRAWING IS NOT TO BE COPIED OR USED WITHOUT THE APPROVAL OF MICRO SWITCH.

CHARACTERISTICS

OPERATING FORCE — — 30 OZ APPROX
PRETRAVEL — — — — — .040 APPROX
DIFFERENTIAL TRAVEL — — — .050 MAX
B TOTAL TRAVEL — — — — .110 APPROX

ELECTRICAL DATA

CONTACT ARRANGEMENT
S P D T (2)

250 VAC — — — — — — — — — — — 5 AMP
30 VOLTS DC RATING
INDUCTIVE — — — — SEA LEVEL — — — 3 AMP
50,000 FT — — 2.5 AMP
RESISTIVE — — — — SEA LEVEL — — — 5 AMP
50,000 FT — — — 5 AMP
MAXIMUM INRUSH — — — — — — — 24 AMP

SCALE FULL
DO NOT SCALE PRINT

UNLESS OTHERWISE NOTED
DIMENSIONS ARE IN INCHES
TOLERANCES ARE:

ONE PLACE	(.0)	±.030
TWO PLACE	(.00)	±.015
THREE PLACE	(.000)	±.005
ANGLES		±

WEIGHT

REVISIONS

A	CO 19800	M B F 12 FEB 65	22 OCT 98
B	CO 21022	M B F 22 FEB 66	
C	CO30742	R E R 2 OCT 72	J A F
D	CO31782	D G W 16 MAR 73	
E	CO-93593	P P F 22 OCT 98	
F	CO-94273	G J W 15 APR 99	

REPLACES
RELEASE NO.
M 2PB11 PAGE 1 OF 1
DRAWING NUMBER
ISSUE 16

DRAWN	M B F	12 FEB 65
CHECK	L S D	19 FEB 65
CHECK		
CHECK		

FORMTEK
FC-50378