MICRO SWITCH
a Honeywell Division
FED.MFG.CODE 91929

SWITCH–BASIC

CATALOG LISTING
1XE311

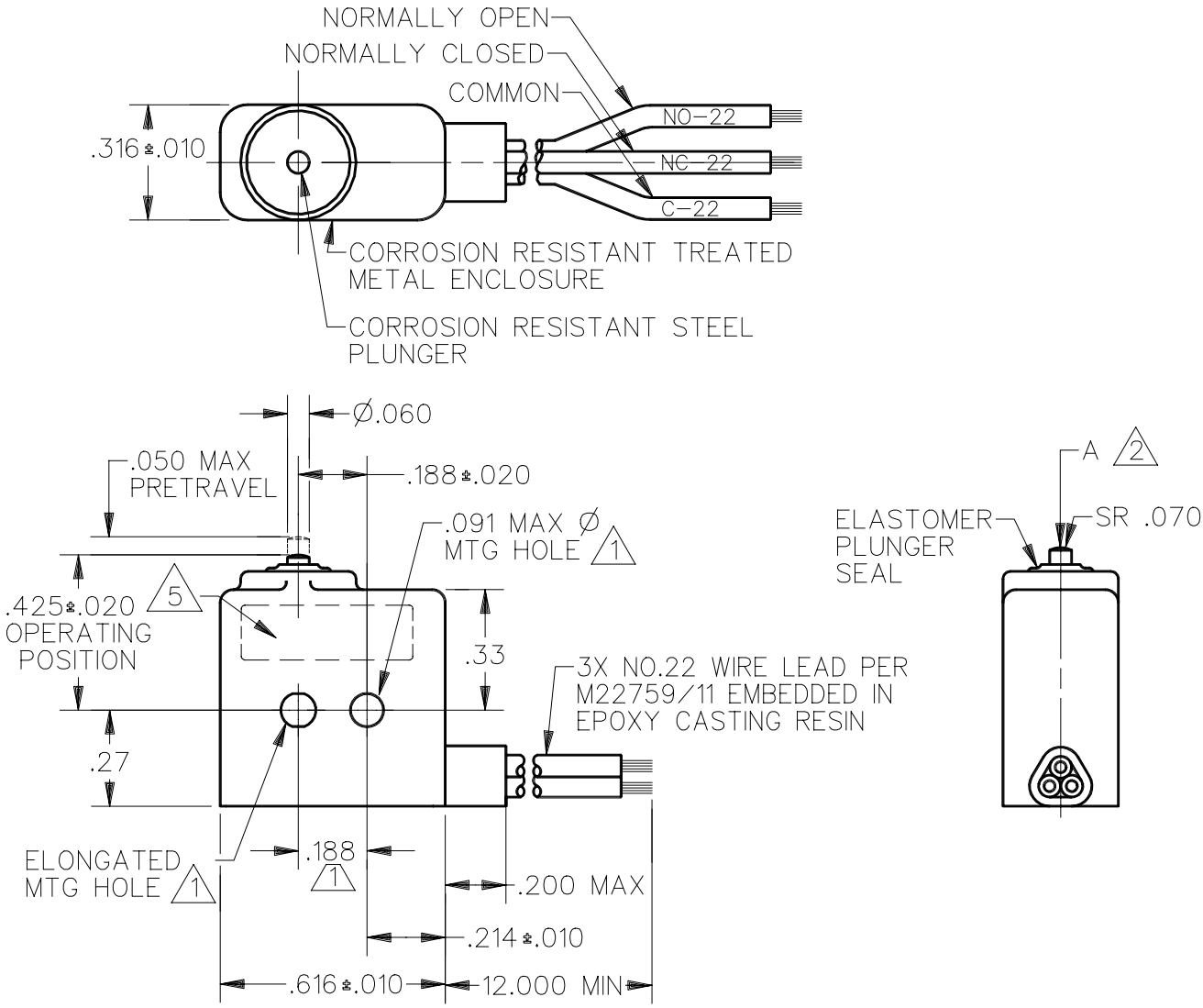

NOTES
1. MOUNTING HOLES WILL ACCEPT .087 MAXØ PINS OR SCREWS ON .188±.002 CENTERS
2. ACTUATION IN LINE WITH ARROW "A" IS RECOMMENDED
3. WEIGHT OF SWITCH ONLY IS .16 OZ MAX. WEIGHT OF SWITCH, WITH WIRE LEADS IS .55 OZ MAX
4 – WIRE LEADS MARKED WITH CIRCUIT IDENTIFICATION AND WIRE GAGE (NO–22, C–22, AND NC–22) PER MIL–W–5088
5. YELLOW MARKING IS ON BOTH SIDES OF HOUSING TO IDENTIFY THAT THIS UNIT HAS GOLD CONTACTS

ANSI Y14.5M–1982 APPLIES

THIS DRAWING COVERS A PROPRIETARY ITEM AND IS THE PROPERTY OF MICRO SWITCH, A DIVISION OF HONEYWELL. THIS DRAWING IS NOT TO BE COPIED OR USED WITHOUT THE APPROVAL OF MICRO SWITCH.

THIRD ANGLE PROJECTION

CHARACTERISTICS	ELECTRICAL DATA	SCALE 2:1	DO NOT SCALE PRINT
OPERATING FORCE — — — — 5–17OZ	CONTACT ARRANGEMENT SPDT	UNLESS OTHERWISE SPECIFIED TOLERANCES ARE	
RELEASE FORCE — — — — 4 OZ MIN	28 VOLTS DC RATING	ONE PLACE (.0)	±.030
RELEASE TRAVEL — — — — .004 MIN	INDUCTIVE---SEA LEVEL---1/2 AMP	TWO PLACE (.00)	±.015
DIFFERENTIAL TRAVEL — — — .005 MAX	50,000 FT---1/2 AMP	THREE PLACE (.000)	±.005
OVERTRAVEL — — — — — — .004 MIN	RESISTIVE---SEA LEVEL---1 AMP	ANGLES	±
	50,000 FT---1 AMP	WEIGHT 3	

REPLACES
RELEASE NO. PR–20431
M 1XE311
DRAWING NUMBER
ISSUE 3
CHECK
REVISIONS
A ADD NOTE 5
NWJ 6/16/92
B PR–20431
TSM 14DEC92
CHECK
CHECK
DRAWN 14 DEC 92
TSM
DDM/CAD