MICRO SWITCH
FREEPORT, ILLINOIS, U.S.A.
A DIVISION OF HONEYWELL
FED. MFG. CODE 91929

SWITCH-ENCLOSED

CATALOG LISTING
622EN112-R

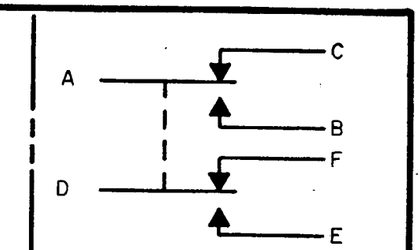

CIRCUIT DIAGRAM

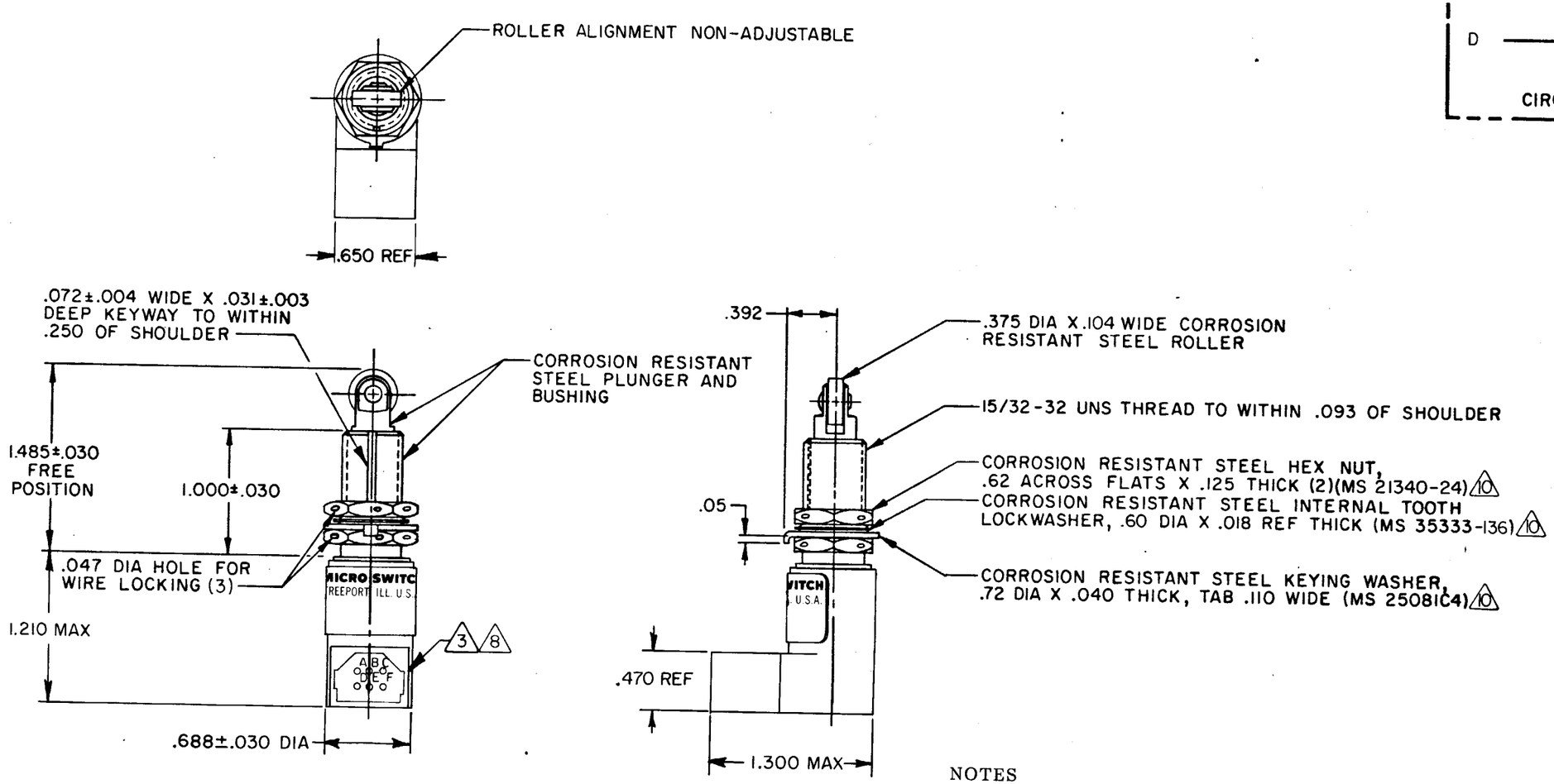

NOTES
1 - CORROSION RESISTANT STEEL ENCLOSURE
2 - SWITCH SEALED PER MIL-S-8805 SYMBOL 4
3 DEUTSCH RECEPTACLE
4 - COINCIDENCE OF OPERATING AND RELEASING POINTS: .010 OF PLUNGER TRAVEL
5 - ELECTRICAL RATINGS APPLY AS SPECIFIED IN MIL-S-8805/43 UP TO 185°F
6 - CIRCUIT DIAGRAM AND CATALOG LISTING ARE SHOWN ON NAMEPLATE
7 - CIRCUIT DIAGRAM - LETTERS ARE ASSOCIATED WITH RECPETACLE
- NUMBERS ARE ASSOCIATED WITH WIRING
8 CONNECTOR MUST BE PARALLEL WITH CENTERLINE OF BUSHING KEYWAY WITHIN ±6°
9 - ROLLER MUST BE PERPENDICULAR WITH BUSHING KEYWAY WITHIN 2.5°, ROLLER PLUNGER CAN BE ROTATED CLOCKWISE OR COUNTER CLOCKWISE TO ALIGN THE KEYWAY WITHIN 2.5°
10 HARDWARE MAY BE PACKAGED UNASSEMBLED PER MIL-S-8805

THIS DRAWING COVERS A PROPRIETARY ITEM AND IS THE PROPERTY OF MICRO SWITCH. A DIVISION OF HONEYWELL. THIS DRAWING IS NOT TO BE COPIED OR USED WITHOUT THE APPROVAL OF MICRO SWITCH.

CHARACTERISTICS

OPERATING FORCE — 3-6 LB
FULL OVERTRAVEL FORCE — 17 LB MAX
RELEASE FORCE — 2 LB MIN
PRETRAVEL — .040 MAX
DIFFERENTIAL TRAVEL — .020 MAX
OVERTRAVEL — .210 MIN

ELECTRICAL DATA

CONTACT ARRANGEMENT
SPDT (2)

LOAD	28 VDC	
	SEA LEVEL	50,000 FT.
RES	7	7
IND	4	2.5
MOTOR	4	
LAMP		

SCALE FULL
DO NOT SCALE PRINT

TOLERANCES
APPLY TO DESIGN UNITS. CONVERSIONS ARE ONLY FOR REFERENCE. UNLESS NOTED, TOLERANCES ARE ±

	DIM. mm	TOL. mm/in	DIM. in	TOL. mm/in
NO PLACES	X	1/.04		
ONE PLACE	X.X	0.4/.016	X.X	0.8/.03
TWO PLACES	X.XX	0.16/.005	X.XX	0.38/.015
THREE PLACES			X.XXX	0.13/.005
ANGLES				

DESIGN UNITS SI METRIC ☐ US CUSTOMARY ☒

THIRD ANGLE PROJECTION

WEIGHT .15 LBS MAX

M 622EN112-R
DRAWING NUMBER
ISSUE 8 9 10 13
RELEASE NO. PR-6804
REPLACES
CHECK
CHECK
CHECK
CHECK
DRAWN D J W 12 OCT 79
FO-52851-B