M 44EN14-10

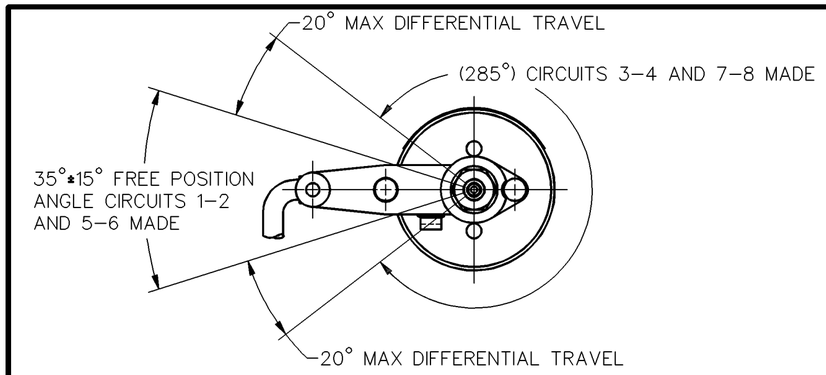

CHARACTERISTICS

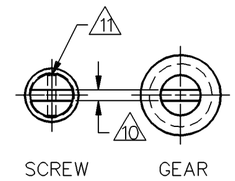

LEVER MAY BE ADJUSTED FOR AN INFINITE NUMBER OF POSITIONS THRU 360°. ADJUSTMENT IS MADE BY LOOSENING THE LOCK NUT AND THEN THE SCREW AND TURNING GEAR UNTIL LEVER IS IN DESIRED POSITION. SCREW AND LOCK NUT ON SHAFT IS THEN TIGHTENED TO POSITIVELY LOCK LEVER IN POSITION.

LEVER ADJUSTMENT DETAIL
SCALE 2:1

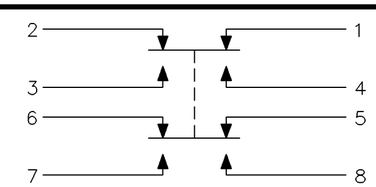

CIRCUIT DIAGRAM

NOTES
1 – CORROSION RESISTANT STEEL ENCLOSURE
2 – SWITCH SEALED PER MIL-PRF-8805, SYMBOL 4
3 – CIRCUIT DIAGRAM AND CATALOG LISTING ARE SHOWN ON NAMEPLATE
4 – UNIT PROVIDES NO SHAFT RESTORING TORQUE. THE ACTUATING DEVICE MUST CONTROL MOVEMENT OF THE SHAFT
5 – DO NOT APPLY MORE THAN 20-25 INCH/POUNDS OF TORQUE WHEN TIGHTENING LOCKING NUT
6 – LEADS PARALLEL WITH CENTERLINE OF MOUNTING PINS WITHIN ±10°
7 – HARDWARE MAY BE PACKAGED UNASSEMBLED PER MIL-PRF-8805
8 – POTTING MATERIAL
9 – FREE TO ROTATE
10 – .050 WIDE X .050 DEEP SLOT
11 – Ø.037 HOLE FOR WIRE LOCKING

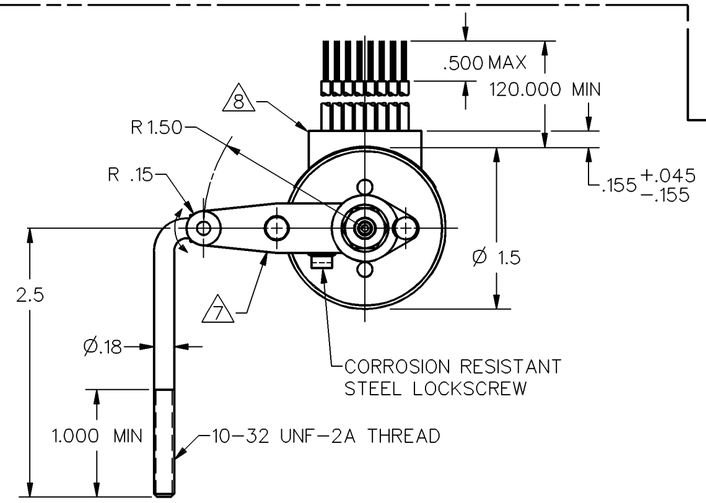

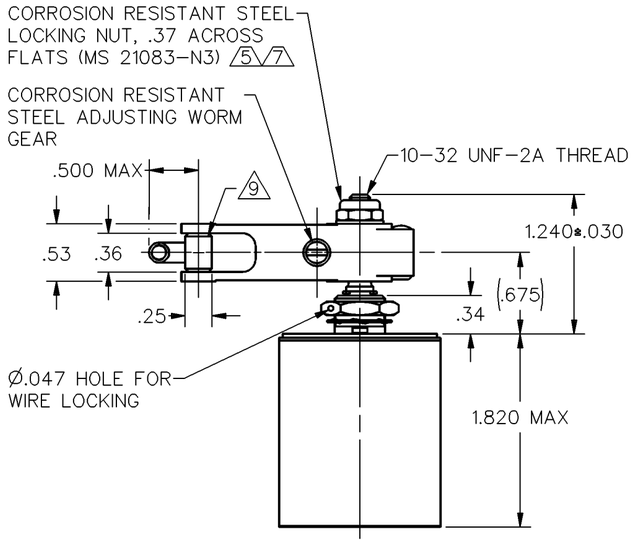

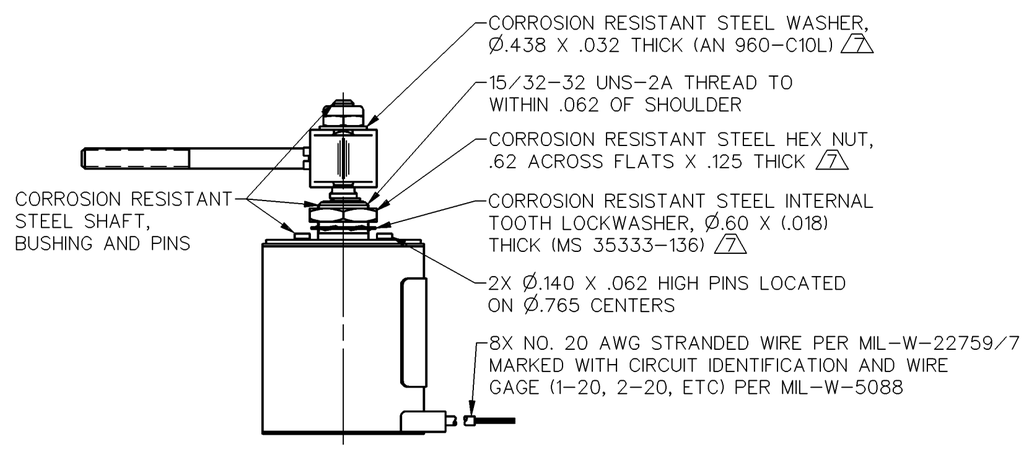

CHARACTERISTICS	
OPERATING TORQUE	10 IN-LB MAX
PRETRAVEL	SEE DETAIL
DIFFERENTIAL TRAVEL	SEE DETAIL
OVERTRAVEL	SEE DETAIL
FREE POSITION	SEE DETAIL

ELECTRICAL DATA		
CONTACT ARRANGEMENT (SEE CIRCUIT DIAGRAM)		
LOAD	28 VDC	
	SEA LEVEL	50,000 FT
RES	15	15
IND	10	10
MOTOR	5	
LAMP	3	3

MASTER REDUCED
ANSI Y14.5M-1982 APPLIES

THIS DRAWING COVERS A PROPRIETARY ITEM AND IS THE PROPERTY OF MICRO SWITCH. A DIVISION OF HONEYWELL. THIS DRAWING IS NOT TO BE COPIED OR USED WITHOUT THE APPROVAL OF MICRO SWITCH.

MICRO SWITCH a Honeywell Division
FED. MFG. CODE 91929

SWITCH-ENCLOSED

CATALOG LISTING
44EN14-10

THIRD ANGLE PROJECTION

SCALE FULL

DO NOT SCALE PRINT

UNLESS OTHERWISE SPECIFIED TOLERANCES ARE

ONE PLACE	(.0)	±.030
TWO PLACES	(.00)	±.015
THREE PLACES	(.000)	±.005
ANGLES		±

WEIGHT 16.5 OZ MAX

M 44EN14-10
DRAWING NUMBER
ISSUE 17
RELEASE NO. SR-10935
REPLACES
CHECK
REVISIONS
A CO-76587 TSM 5 NOV 93
B CO-78255 MAM 1 SEP 94
C 0008133 KSR 28 SEP 04
CHECK
28 SEP 04
AK
CHECK
5 NOV 93
DRAWN TSM
RASTER