MICRO SWITCH
FREEPORT ILLINOIS U S A
A DIVISION OF HONEYWELL
FED. MFG. CODE 91929

SWITCH - ENCLOSED

CATALOG LISTING
44EN27-12

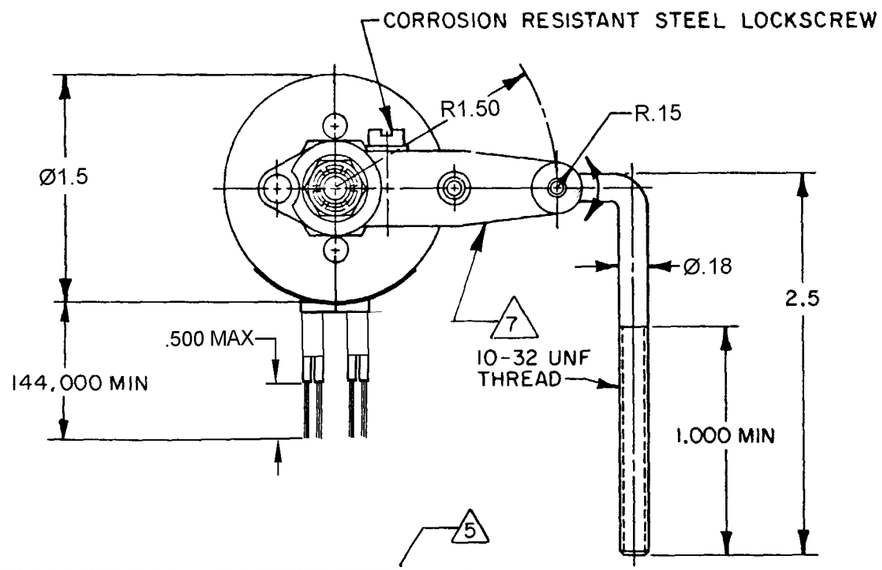

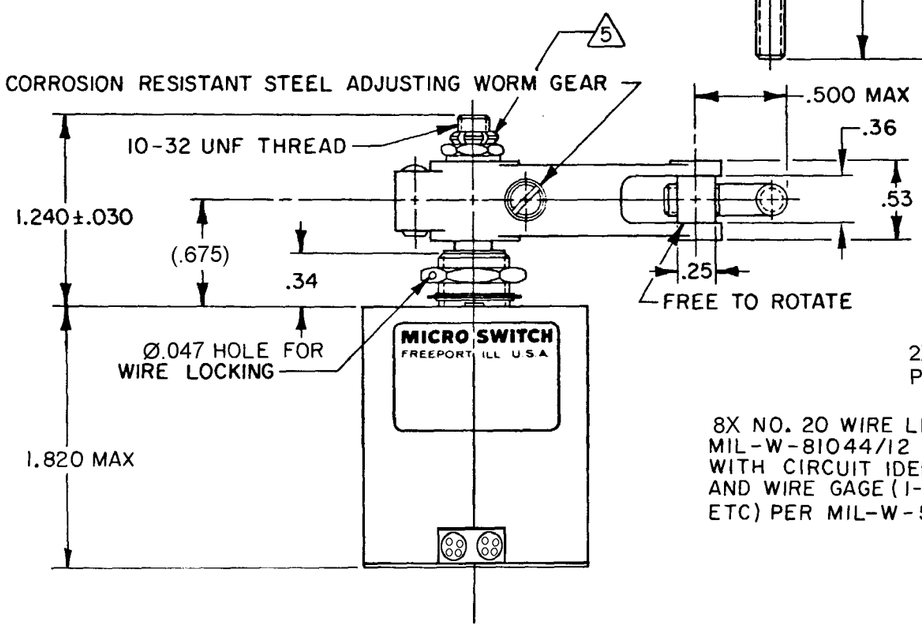

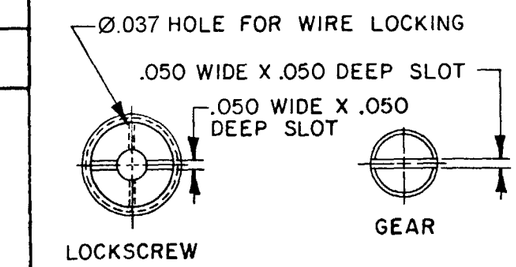

LEVER MAY BE ADJUSTED FOR AN INFINITE NUMBER OF POSITIONS THRU 360° ADJUSTMENT IS MADE BY LOOSENING THE LOCK NUT AND THEN THE LOCKSCREW AND TURNING GEAR UNTIL LEVER IS IN DESIRED POSITION. LOCKSCREW AND LOCK NUT ON SHAFT IS THEN TIGHTENED TO POSITIVELY LOCK LEVER IN POSITION.

LEVER ADJUSTMENT DETAIL

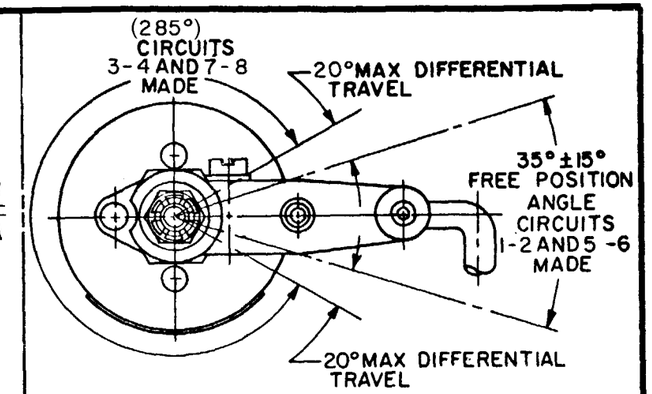

CHARACTERISTICS

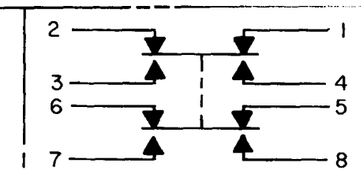

CIRCUIT DIAGRAM

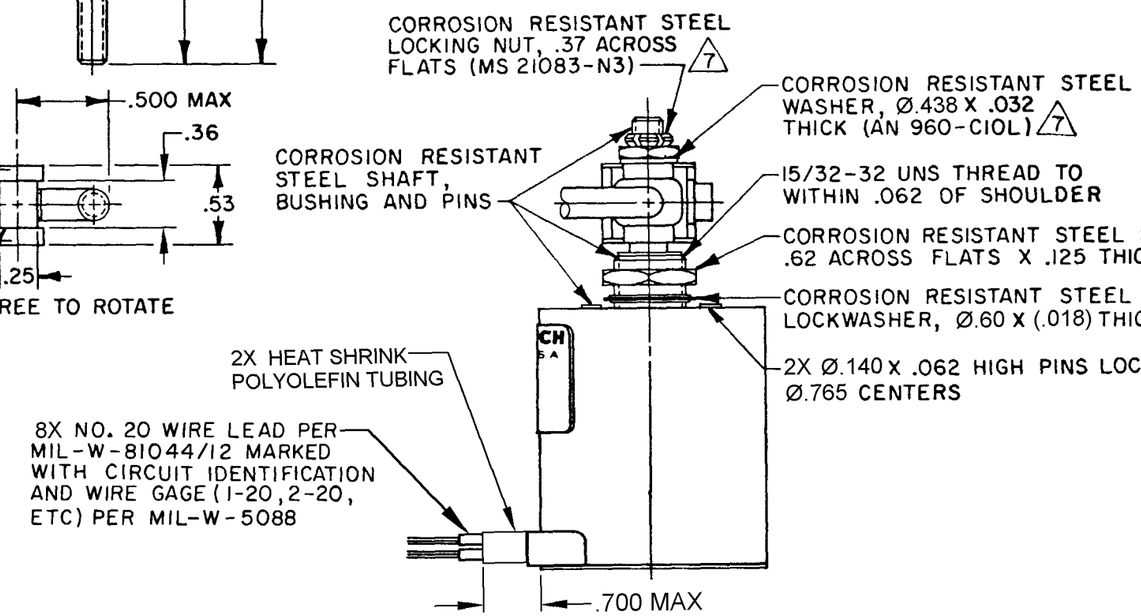

RASTER

THIS DRAWING COVERS A PROPRIETARY ITEM AND IS THE PROPERTY OF MICRO SWITCH, A DIVISION OF HONEYWELL. THIS DRAWING IS NOT TO BE COPIED OR USED WITHOUT THE APPROVAL OF MICRO SWITCH.

THIRD ANGLE PROJECTION

SCALE NONE

DO NOT SCALE PRINT

TOLERANCES
APPLY TO DESIGN UNITS. CONVERSIONS ARE ONLY FOR REFERENCE. UNLESS NOTED TOLERANCES ARE ±

	DIM. mm	TOL. mm/in	DIM. in	TOL. mm/in
NO PLACES	X	1/.04		
ONE PLACE	X.X	0.4/.016	X.X	0.8/.03
TWO PLACES	X.XX	0.15/.006	X.XX	0.38/.015
THREE PLACES			X.XXX	0.13/.005
ANGLES				

DESIGN UNITS SI METRIC ☐ US CUSTOMARY ☒

RAW MATERIAL-COMMERCIAL STANDARD
MICRO SWITCH STANDARDS APPLY
DIMENSIONS ARE TO BE MET BEFORE PROTECTIVE COATINGS ARE APPLIED

WEIGHT 19.25 OZ MAX

CHARACTERISTICS

OPERATING TORQUE — — — —10 IN-LB MAX

PRETRAVEL
DIFFERENTIAL TRAVEL
OVERTRAVEL
FREE POSITION
} SEE DETAIL

ELECTRICAL DATA

CONTACT ARRANGEMENT
SEE CIRCUIT DIAGRAM

LOAD	28 VDC SEA LEVEL	28 VDC 50,000 FT.
RES	15	15
IND	10	10
MOTOR	5	
LAMP	3	3

NOTES:
1 - CORROSION RESISTANT STEEL ENCLOSURE
2 - SWITCH SEALED PER MIL-PRF-8805 SYMBOL 4
3 - UNIT PROVIDES NO SHAFT RESTORING TORQUE THE ACTUATING DEVICE MUST CONTROL MOVEMENT OF THE SHAFT
4 CIRCUIT DIAGRAM AND CATALOG LISTING ARE SHOWN ON NAMEPLATE
5 DO NOT APPLY MORE THAN 20-25 INCH-POUNDS OF TORQUE WHEN TIGHTENING LOCKING NUT
6 LEADS PARALLEL WITH CENTERLINE OF MOUNTING PINS WITHIN 10°
7 HARDWARE MAY BE PACKAGED UNASSEMBLED PER MIL-PRF-8805

M 44EN27-12
DRAWING NUMBER
RELEASE NO. PR-1844
REPLACES
ISSUE 10 11 12 13 14

REVISIONS

A	CO 44351	S L B 28 NOV 79	
B	C047573	TSM 11 AUG 80	21APR10
C	CO 49806	TSK 28 SEPT 81	CMH
D	C065563	TSK 18 APR 89	
E	0063671	PRS 21APR10	

DRAWN S L B 28 NOV 79
CHECK
FO-52851-A