MICRO SWITCH
a Honeywell Division
FED. MFG. CODE 91929

SWITCH - ENCLOSED

CATALOG LISTING
402EN224-RB

NOTES
1 - COINCIDENCE OF OPERATING AND RELEASING POINTS: .010 OF PLUNGER TRAVEL
2 - CORROSION RESISTANT ENCLOSURE, PLUNGER, AND BUSHING
3 - SWITCH SEALED PER MIL-PRF-8805, SYMBOL 4
4 PRINT CIRCUIT DIAGRAM, CATALOG LISTING AND DATE CODE ON NAMEPLATE
5 HARDWARE MAY BE PACKAGED UNASSEMBLED PER MIL-PRF-8805
6 - TEMPERATURE RANGE: -67°F TO +236°F
7 - NOTED ELECTRICAL RATING APPLIES PER MIL-PRF-8805/40-1 UP TO +236°F
8 - SHOCK QUALIFIED TO 100g
9 MOUNTING PANEL THICKNESS: .100 MINIMUM
10- ICING QUALIFIED PER MIL-PRF-8805
11 - MINIMUM ELECTRICAL LIFE AT RATED LOAD: 35,000 CYCLES
12- MINIMUM MECHANICAL ENDURANCE: 35,000 CYCLES
13- QUALIFIED FOR SAND AND DUST PER MIL-STD-810, METHOD 510.3
14- QUALIFIED FOR HUMIDITY PER MIL-STD-810, METHOD 507.3
15- QUALIFIED TO 500 HOURS CONTINUOUS EXPOSURE TO SALT FOG PER MIL-STD-810, METHOD 509.3

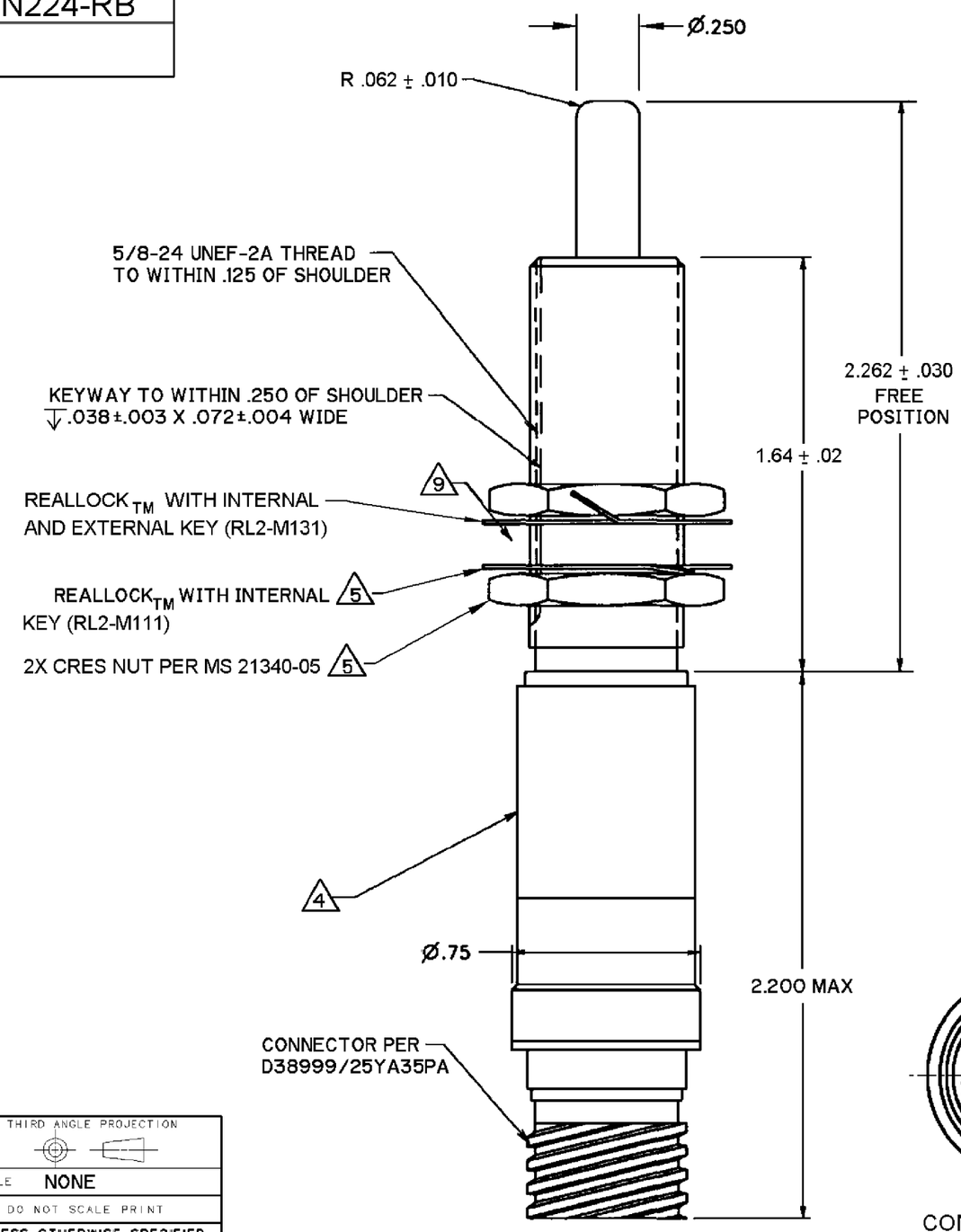

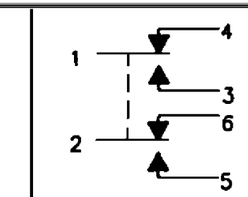

CIRCUIT DIAGRAM

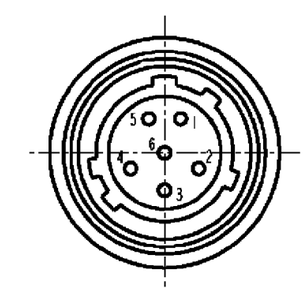

CONNECTOR DETAIL

ANSI Y14.5M-1982 APPLIES

THIS DRAWING COVERS A PROPRIETARY ITEM AND IS THE PROPERTY OF MICRO SWITCH, A DIVISION OF HONEYWELL. THIS DRAWING IS NOT TO BE COPIED OR USED WITHOUT THE APPROVAL OF MICRO SWITCH

THIRD ANGLE PROJECTION

SCALE NONE

DO NOT SCALE PRINT

CHARACTERISTICS

OPERATING FORCE	6 - 12 LBS
FULL OVERTRAVEL FORCE	30 LBS MAX
RELEASE FORCE	4 LBS MIN
PRETRAVEL	.040 MAX
DIFFERENTIAL TRAVEL	.020 MAX
OVERTRAVEL	.500 MIN

ELECTRICAL DATA

CONTACT ARRANGEMENT
2X S P D T GOLD

LOAD (AMPS)	28 VDC	
	SEA LEVEL	50,000 FT
RESISTIVE	.5	.5
INDUCTIVE	.25	.25

UNLESS OTHERWISE SPECIFIED TOLERANCES ARE

ONE PLACE	(.0)	±.030
TWO PLACE	(.00)	±.015
THREE PLACE	(.000)	±.005
ANGLES		±

WEIGHT .22 LBS MAX

CATALOG LISTING 402EN224-RB
PAGE 1 OF 1
ISSUE 4
REPLACES
RELEASE NO. 204149
CHECK
REVISIONS
A 205142 G J W 20 MAR 02
B 205641 G JW 24 MAY 02
C 0012624 PH/AP 18 MAY 05
CHECK
12 OCT 01
S A V
CHECK
12 OCT 01
C S L
DRAWN
RASTER