MICRO SWITCH
a Honeywell Division
FED. MFG. CODE 91929

SWITCH–ENCLOSED

CATALOG LISTING
1EN330–R3

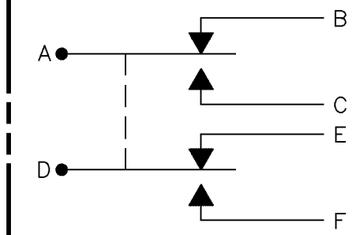

CIRCUIT DIAGRAM

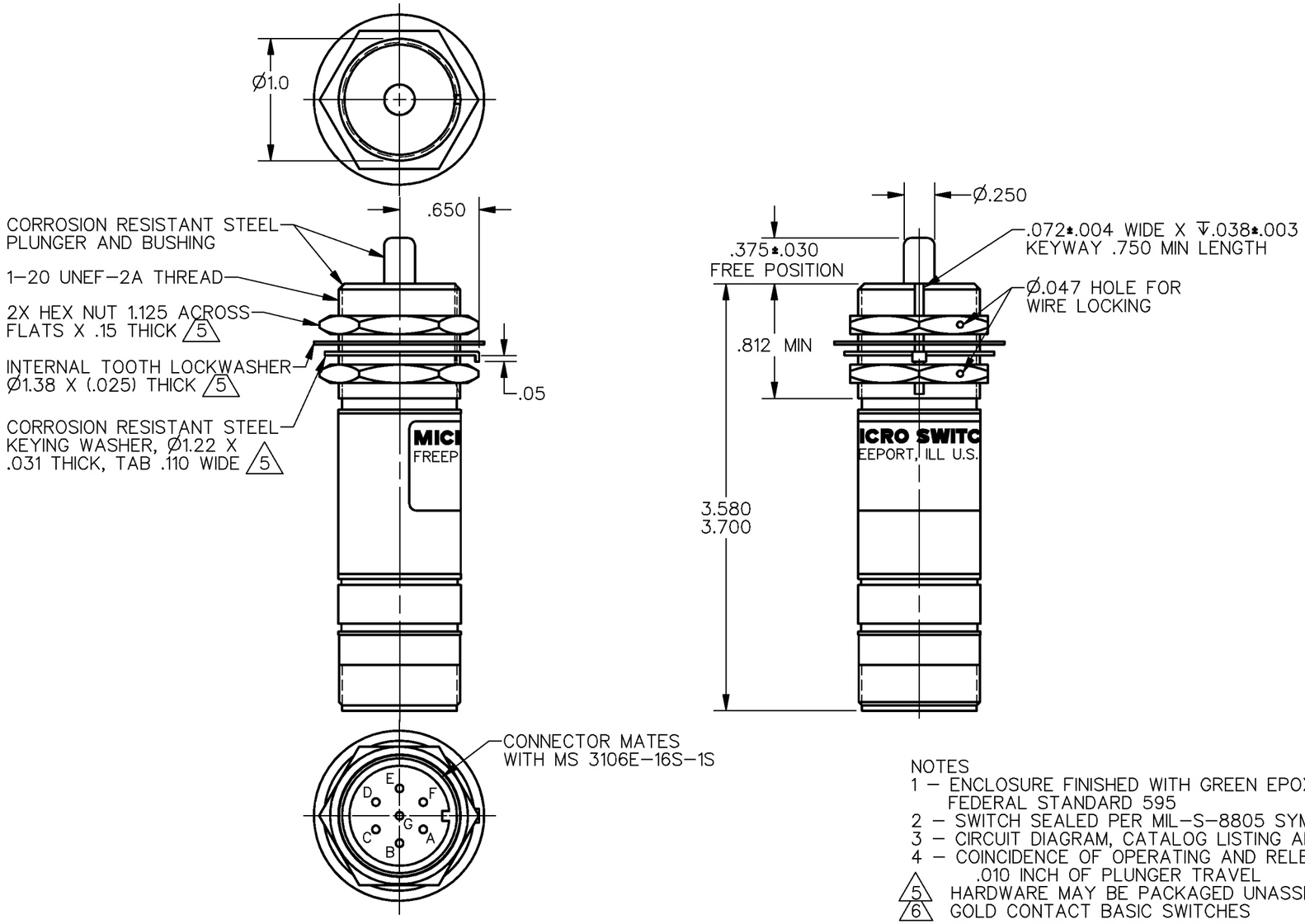

NOTES
1 – ENCLOSURE FINISHED WITH GREEN EPOXY BASED ENAMEL COLOR NO. 34151 PER FEDERAL STANDARD 595
2 – SWITCH SEALED PER MIL–S–8805 SYMBOL 4
3 – CIRCUIT DIAGRAM, CATALOG LISTING AND DATE CODE ARE SHOWN ON NAMEPLATE
4 – COINCIDENCE OF OPERATING AND RELEASING POINTS: .010 INCH OF PLUNGER TRAVEL
5 HARDWARE MAY BE PACKAGED UNASSEMBLED PER MIL–S–8805
6 GOLD CONTACT BASIC SWITCHES

THIS DRAWING COVERS A PROPRIETARY ITEM AND IS THE PROPERTY OF MICRO SWITCH. A DIVISION OF HONEYWELL. THIS DRAWING IS NOT TO BE COPIED OR USED WITHOUT THE APPROVAL OF MICRO SWITCH

THIRD ANGLE PROJECTION

SCALE FULL

DO NOT SCALE PRINT

CHARACTERISTICS

OPERATING FORCE — — — — — 6–12 LB
FULL OVERTRAVEL — — — — 30 LB MAX
RELEASE FORCE — — — — — — 4 LB MIN
PRETRAVEL — — — — — — — .040 MAX
DIFFERENTIAL TRAVEL — — — .020 MAX
OVERTRAVEL — — — — — — — .250 MIN

ELECTRICAL DATA

CONTACT ARRANGEMENT 2X S P D T 6

LOAD	28 VDC	
	SEA LEVEL	50,000 FT.
RES	1	1
IND	.5	.5

UNLESS OTHERWISE SPECIFIED TOLERANCES ARE

ONE PLACE	(.0)	±.030
TWO PLACE	(.00)	±.015
THREE PLACE	(.000)	±.005
ANGLES		±

WEIGHT 7.0 OZ MAX

ANSI Y14.5M–1982 APPLIES

CATALOG LISTING 1EN330–R3
PAGE 1 OF 1
ISSUE 2
RELEASE NO. PR–22923
REPLACES
CHECK
REVISIONS
A PR22923
T S M
2 SEP 97
CHECK
CHECK
CHECK
DRAWN T S M 2 SEP 97
DDM/CAD