THIS DOCUMENT IS THE PROPERTY OF KEYSTONE ELECTRONICS CORP. AND SHALL NOT BE REPRODUCED, DISTRIBUTED OR USED AS A BASIS FOR MANUFACTURE WITHOUT PRIOR WRITTEN PERMISSION FROM KEYSTONE ELECTRONICS CORP.

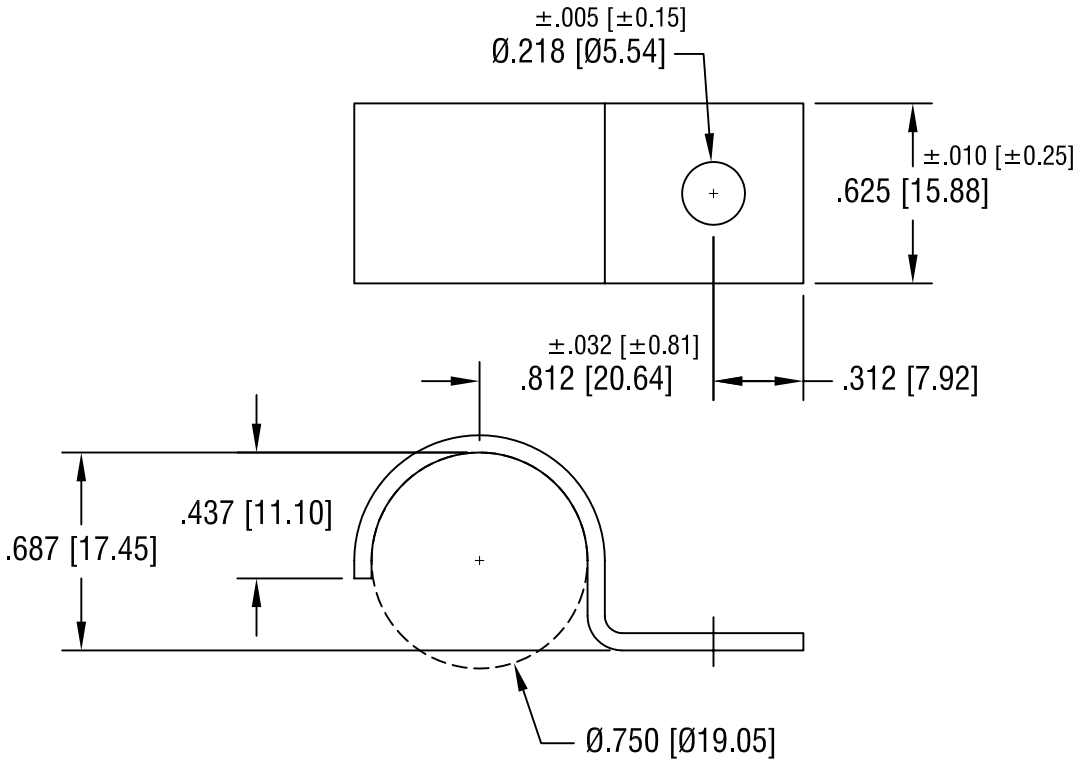

DATE	DESCRIPTION	REV.
10.18.06	CHANGE AS PER ECN 06-071	A

KEYSTONE ELECTRONICS CORP.
ASTORIA, N.Y. 11105-2017

PART NAME	STEEL HALF CLAMP		
MATERIAL	.060 [1.52] TH'K STEEL		
FINISH	ZINC PLATE CLEAR CHROMATE	DRN BY BOONE	DATE 1.25.00
		APP'D LN	SCALE 1.5X
TOLERANCES INCH [MM] DECIMAL ± .015 [± 0.38] ANGULAR ± 1° UNLESS OTHERWISE SPECIFIED	CODE C/M	DWG NO. 8150	