HDMI Receptacle, Type C, Right Angle

154-10417-E

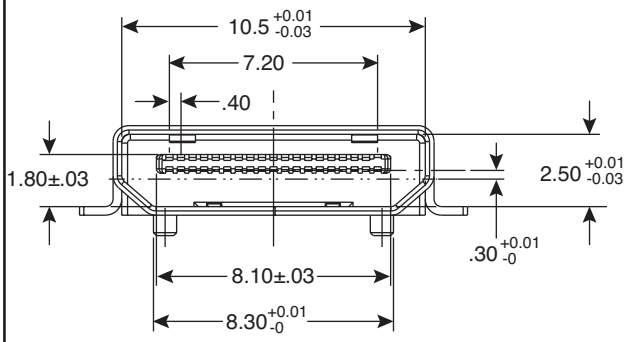

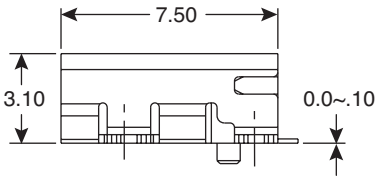

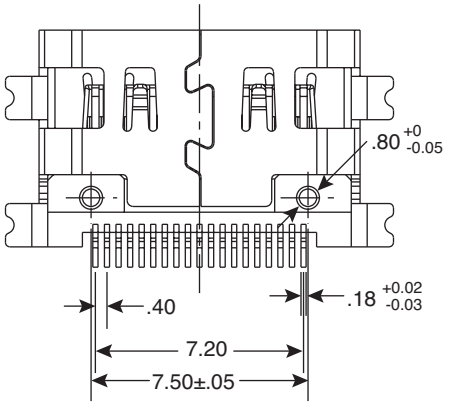

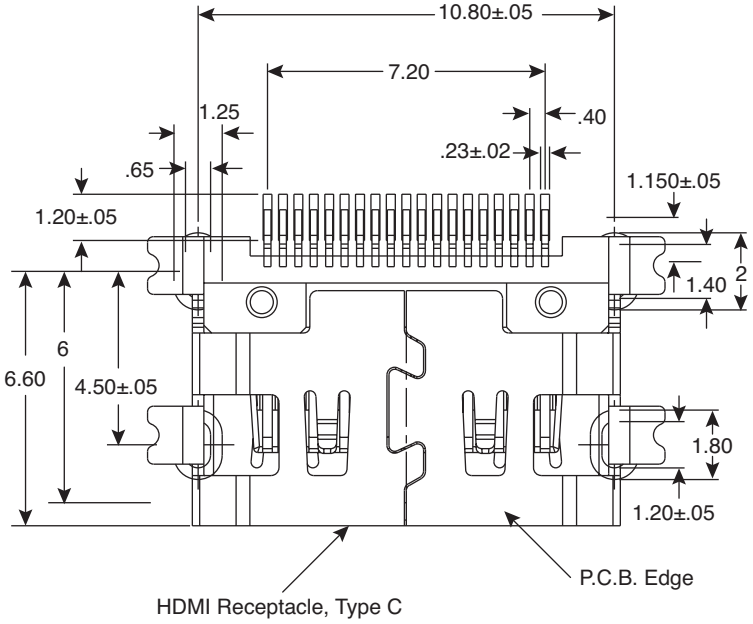

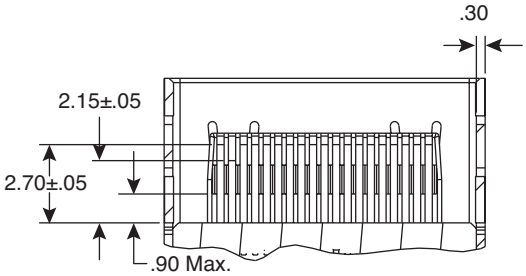

Dimensions: mm

ELECTRICAL SPECIFICATIONS	
Current Rating:	0.5A
Voltage Rating:	40V DC
Contact Resistance:	30mΩ Max.
Insulation Resistance:	100MΩ Min.
Operating Temperature:	0˚C~+50˚C

MATERIAL SPECIFICATIONS	
Housing:	High Temp. Plastic
Shell:	Copper Alloy
Shell Plating:	Nickel Underplating, Tin Plating
Terminal:	Copper Alloy
Terminal Plating:	Tin Selective Gold
Product Number:	1010SC10911-Shell Plating Gold Hlash 1µ Min. over 5µ Nickel Min. 1010SC10912-Shell Plating pure tin 80µ Min. over 50µ nickel Min.
RoHS Compliant	

Date Last Revised: 6-29-12

Available from Mouser Electronics
1-800-346-6873 / www.mouser.com

KC-301236

Specifications are subject to change without notice. No liability or warranty implied by this information. Environmental compliance based on producer documentation.